Joël MERKER

École Normale Supérieure

Département de Mathématiques et Applications

45 rue d'Ulm, F-75230 Paris Cedex 05

www.dma.ens.fr/∼merker/index.html

merker@dma.ens.fr

Travaux sélectionnés sur la régularité analytique des applications CR lisses ou formelles

[366 pages, 20 figures]

Document 1, p. 2: Article de synthèse (publié) sur l'application de réflexion CR associée à une application CR formelle entre deux variétés CR génériques analytiques réelles quelconques.

Document 2, p. 105: Article (publié) sur l'application de réflexion CR associée à un difféomorphisme $\mathscr{C}^\infty$ entre deux hypersurfaces analytiques réelles globalement minimales.

Document 3, p. 172: Article (publié) sur l'algébricité partielle d'applications holomorphes entre variétés CR algebriques au sens de Nash.

Document 4, p. 211: Article publié sur l'analyticité d'applications CR lisses satisfaisant une condition de non dégénérescence qui généralise la finitude essentielle.

Document 5, p. 238: Article (publié) qui unifie les concepts de non-dégénérescence pour les applications CR formelles.

Document 6, p. 340: Article (publié) qui aida en 1999 Zaitsev à réviser complètement et à corriger son travail, accepté *avec erreurs graves* découvertes par Sylvain Damour, à Acta Mathematica.

[6 documents, travaux effectués entre début 2000 et fin 2004.]

Étude de la régularité analytique de l'application de réflexion CR formelle

Joël Merker

Abstract. La recherche de formes normales[1] pour les sous-variétés analytiques réelles de $\mathbb{C}^n$ soulève la question de la convergence des normalisations formelles. En 1983, J.K. Moser et M.W. Webster ont donné des exemples de surfaces analytiques réelles dans $\mathbb{C}^2$ à tangente complexe isolée et hyperbolique au sens de E. Bishop, qui sont formellement mais non holomorphiquement normalisables (à cause d'un phénomène de petits diviseurs), même lorsque la forme normale est elle-même analytique ou algébrique. En revanche, il apparaît qu'un tel phénomène ne se produit pas pour les sous-variétés dont la dimension CR est localement constante, d'après des résultats récents dus à S.M. Baouendi, P. Ebenfelt et L.-P. Rothschild, et qui sont énoncés avec des hypothèses de non-dégénérescence relativement simples, mais satisfaites en un point Zariski-générique[2]. Ces auteurs établissent notamment que toute application CR formelle inversible entre deux sous-variétés de $\mathbb{C}^n$ génériques, analytiques réelles, finiment non-dégénérées et minimales (au sens de J.-M. Trépreau et A.E. Tumanov) est convergente. Nous démontrons ici un théorème de convergence plus général, valable sans aucune hypothèse de non-dégénérescence, et qui confirme la rigidité de la catégorie CR (*voir* Théorème 1.23). Ce résultat s'interprète alors comme un principe de symétrie de Schwarz formel pour les applications CR. Nous en déduisons que toute équivalence CR formelle entre deux sous-variétés de $\mathbb{C}^n$ génériques, analytiques réelles et minimales est convergente si et seulement si les deux sous-variétés sont holomorphiquement non-dégénérées (au sens de N. Stanton). Enfin, nous établissons que deux sous-variétés de $\mathbb{C}^n$ génériques, analytiques réelles et minimales sont formellement CR équivalentes si et seulement si elles sont biholomorphiquement équivalentes.

Annales Fac. Sci. Toulouse, **XIV** (2005), no. 2, 215–330

Table des matières

Partie I ..... **3.**
1. Introduction ..... **3.**
2. Préliminaire : séries formelles, analytiques et algébriques ..... **25.**
3. Géométrie locale des paires de feuilletages minimales ..... **31.**
4. Jets de sous-variétés de Segre et invariance de l'application de réflexion ..... **43.**
Partie II ..... **51.**
5. Convergence d'applications CR formelles finiment non-dégénérées ..... **51.**
6. Convergence d'applications CR formelles Segre non-dégénérées ..... **58.**
7. Convergence de l'application de réflexion CR formelle ..... **67.**
Références ..... **98.**

[Avec 2 figures]

§1. INTRODUCTION

Cette *Introduction* étendue est nécessaire à la présentation des résultats principaux de ce mémoire. Dans les Sections 3 et 4, qu'il est conseillé de lire en parallèle, le lecteur trouvera une exposition autonome, élémentaire et détaillée des concepts de base qui y sont utilisés.

Notre objectif principal est d'élaborer un point de vue conceptuel et synthétique sur le principe de réflexion dit «analytique» en plusieurs variables complexes. Notamment, nous insisterons sur quatre concepts majeurs : la minimalité, les jets de sous-variétés de Segre, l'application de réflexion CR et les conditions CR-horizontales de non-dégénérescence.

Nous espérons qu'un tel point de vue permettra de mieux appréhender l'abondance des théorèmes démontrés récemment dans cette direction de recherche. Au lieu de céder, comme certains auteurs, à la tentation d'exprimer tous les résultats et toutes les conséquences possibles, ce qui nuirait à l'unité du sujet, nous sélectionnerons rigoureusement trois énoncés : Théorèmes 1.11, 1.23 et 1.39, ainsi que deux applications : Corollaires 1.45 et 1.46. Puisqu'une telle sélection ne saurait se passer d'explications motivées, nous détaillerons nos angles d'attaque à partir d'une analyse de la littérature récente, en formulant des principes combinatoires organisateurs.

1.1. Équivalences CR formelles entre sous-variétés de $\mathbb{C}^n$ analytiques réelles et génériques. Soit M une sous-variété locale de $\mathbb{C}^n$, analytique réelle, passant par l'origine et envisagée au voisinage de ce point de référence. Si elle est de codimension 1, on l'appelle une *hypersurface*. En général, nous supposerons que M est de codimension $d \geq 1$ strictement positive et qu'elle est *générique*, c'est-à-dire que $T_0M + JT_0M = T_0\mathbb{C}^n$, où J est la structure complexe standard de $T\mathbb{C}^n$. Nous supposons aussi que sa dimension CR, égale à $m := n - d$, est strictement positive.

Dans les coordonnées holomorphes $t := (t_1, \ldots, t_n)$ canoniques de $\mathbb{C}^n$, la sous-variété M, entendue comme sous-ensemble de $\mathbb{C}^n$, peut être représentée comme l'ensemble des $t \in \mathbb{C}^n$ où s'annulent exactement d séries entières analytiques $\rho_j(t, \bar{t}) \in \mathbb{C}\{t, \bar{t}\}$, pour $j = 1, \ldots, d$; de telles séries entières doivent satisfaire aux conditions de réalité $\rho_j(t, \bar{t}) \equiv \overline{\rho}_j(\bar{t}, t)$ pour $j = 1, \ldots, d$, s'annuler pour $t = 0$ et posséder des différentielles réelles $d\rho_1, \ldots, d\rho_d$ qui sont indépendantes à l'origine. La généricité de M équivaut alors au fait que les différentielles complexes $\partial\rho_1, \ldots, \partial\rho_d$ sont elles aussi, de surcroît, indépendantes à l'origine.

[1] *Voir* les travaux fondateurs de S.-S. Chern, J.K. Moser [5] et de J.K. Moser, S.M. Webster [MW1983] ainsi que les articles plus récents de S.M. Webster [We1992], de X. Huang, S.G. Krantz [HK1995], de X. Gong [Go1996] et de P. Ebenfelt [Eb1998].

[2] *Voir* [BER1997], [Za1997], [BER1999a], [BER1999b], [BRZ2001].

De même, soient $\rho'_1(t', \bar{t}') = 0, \ldots, \rho'_{d'}(t', \bar{t}') = 0$ des équations cartésiennes définissant une autre sous-variété locale de $\mathbb{C}^{n'}$, analytique réelle, générique, passant par l'origine, qui est de codimension $d' \geq 1$ et de dimension CR égale à $m' := n' - d' \geq 1$, toutes deux strictement positives.

Soit $h(t) := (h_1(t), \ldots, h_n(t))$ une collection de séries formelles $h_i(t) \in \mathbb{C}[\![t]\!]$, $i = 1, \ldots, n$, dont les termes constants s'annulent. Par définition, h induit une *application CR formelle entre M et M'* s'il existe une matrice de taille $d' \times d$ de séries formelles $b(t, \bar{t})$ telle que l'on a l'identité formelle vectorielle $\rho'(h(t), \overline{h}(\bar{t})) \equiv b(t, \bar{t})\, \rho(t, \bar{t})$, interprétée dans le produit $\mathbb{C}[\![t, \bar{t}]\!]^d := \mathbb{C}[\![t, \bar{t}]\!] \times \cdots \times \mathbb{C}[\![t, \bar{t}]\!]$ contenant exactement d facteurs. On notera $h : (M, 0) \longrightarrow_{\mathscr{F}} (M', 0)$ une telle application, avec en indice la lettre $\mathscr{F}$, initiale du mot «formel», car une telle application n'a rien d'une application ponctuelle.

Dans le langage abstrait de la géométrie analytique locale, les applications formelles s'identifient à des morphismes entre anneaux locaux de séries entières convergentes, le tout étant inséré dans une théorie architecturée, mais nous pensons qu'il est encore trop tôt pour entreprendre le travail, certes désirable, d'abstraction de tous les concepts de géométrie CR qui interviendront dans ce mémoire.

De notre point de vue, c'est à partir de l'identité formelle de départ $\rho'\big(h(t), \overline{h}(\bar{t})\big) \equiv b\,(t, \bar{t})\ \rho\,(t, \bar{t})$ que tous nos calculs se déploieront de manière absolument concrète et structurée.

Nous dirons que h est une *équivalence* CR formelle si $n' = n$ et si le déterminant $\det \left(\frac{\partial h_{i_1}}{\partial t_{i_2}}(0)\right)_{1 \leq i_1, i_2 \leq n}$ ne s'annule pas ; on démontre que ceci implique $d' = d$ et $m' = m$.

Ces définitions généralisent au cas formel la notion d'application CR continue, lisse, analytique ou algébrique entre sous-variétés de $\mathbb{C}^n$, analytiques réelles et génériques. Avant de poursuivre, dressons un bref historique récent du principe de réflexion afin justifier le fait que nous ne travaillerons pas avec des sous-variétés algébriques.

1.2. Principe de réflexion algébrique et variations. L'étude de la régularité des applications CR formelles est une variation du principe dit «de réflexion», historiquement initié dans le cas d'applications de classe $\mathscr{C}^1$ entre hypersurfaces strictement pseudoconvexes par S. Pinchuk dans [22] et plus tard, mais indépendamment, par H. Lewy dans [Le1977]. Le paragraphe de [5] consacré à la convergence des formes normales formelles de J.K. Moser contient une démonstration implicite du fait que toute équivalence CR formelle entre hypersurfaces de $\mathbb{C}^n$ analytiques réelles et Levi non-dégénérées est convergente. Dans le premier article [BER1997] consacré à la paramétrisation des applications CR par un jet d'ordre fini en un point ainsi qu'à la régularité des applications CR formelles, S.M. Baouendi, P. Ebenfelt et L.-P. Rothschild démontrent que toute application CR formelle entre deux hypersurfaces de $\mathbb{C}^n$ analytiques réelles et finiment non-dégénérées est convergente. Ce résultat répondait à une

question soulevée par F. Treves ; la non-dégénérescence finie généralise la Levi non-dégénérescence par passage aux dérivées d'ordre supérieur. Peu de temps après, ces énoncés furent transférés à la codimension quelconque par les mêmes auteurs dans [BER1998], en supposant la sous-variété M minimale à l'origine (au sens de J.-M. Trépreau et A.E. Tumanov). La preuve est basée sur les itérations de sous-variétés de Segre, appelées «ensembles de Segre» dans l'article [BER1996], suite de [BR1995]. Grâce à cet outil complexe, ces trois auteurs établissent une condition suffisante optimale pour l'algébricité des biholomorphismes entre sous-variétés de $\mathbb{C}^n$ algébriques réelles et minimales de codimension quelconque (*cf.* la recension [Tr2000]).

Évidemment, les résultats précités ne s'appuient pas sur une généralisation au cas Levi dégénéré des formes normales de J.K. Moser, car nous sommes bien loin actuellement de posséder des indications valables pour édifier une théorie satisfaisante, malgré quelques tentatives incomplètes effectuées dans cette direction pour la dimension complexe trois (*cf.* par exemple [Eb1998]).

Par ailleurs, grâce à la notion de *degré de transcendance* d'une application holomorphe, telle qu'elle apparaît pour la première fois dans le travail [Pu1990] de Y. Pushnikov, basé sur des indications de S. Pinchuk, les trois auteurs B. Coupet, F. Meylan et A. Sukhov sont parvenus à éliminer dans [CMS1999] toute hypothèse de rang sur une application holomorphe h entre sous-variétés algébriques réelles. Cependant, en toute rigueur, on pourrait se dispenser de la terminologie «degré de transcendance», car le point-clé de [Pu1990] et de [CMS1999] consiste à raisonner avec des polynômes minimaux pour les relations algébriques entre les composantes de h et celles de $\overline{h}$. Concrètement, cette approche offre une simplification élégante des calculs majeurs développés pour les sous-variétés essentiellement finies dans [BJT1985], qui avaient été illustrés auparavant sur un exemple par M. Derridj dans [De1985].

Aussi l'approche «degré de transcendance» a-t-elle conduit à une série de travaux récents : [CPS2000], [Me2001a], [Da2001], [CDMS2002], [MMZ2002], [MMZ2003], tous basés sur le même procédé algébrique d'élimination. En effet, il a été rapidement remarqué que le schéma de démonstration s'étendait, sans obstacle majeur et modulo quelques variations mineures, à la situation (légèrement plus générale) où la sous-variété image M' est supposée algébrique réelle, tandis que la sous-variété source M est supposée analytique réelle.

Conjecturalement, on s'attend à ce que presque tous les principes de réflexion connus soient valides dans le cas où M et M' sont *toutes deux analytiques réelles*. Malheureusement, la finitude intrinsèque au concept d'algébricité, qui est fortement utilisée dans ces travaux, fait défaut dans le cas général où M' est analytique réelle. On peut alors se demander si une sous-variété analytique réelle peut être rendue algébrique dans un système de coordonnées locales adéquat.

Récemment, en collaboration avec H. Gaussier, l'auteur a établi dans [GM2004] que la plupart (au sens de R. Baire), des sous-variétés de $\mathbb{C}^n$ minimales et finiment non-dégénérées dont le groupe d'automorphismes holomorphes locaux est commutatif et de dimension n, ne peuvent être rendues algébriques dans aucun système de coordonnées holomorphes locales, quelle que soit la transcendance relative du changement de coordonnées. On dira que de telles sous-variétés ne sont pas localement *algébrisables*. Par le biais d'arguments heuristiques qui extrapoleraient les théorèmes spécifiques de [GM2004], on pourrait se convaincre que dans toute classe de sous-variétés analytiques réelles génériques locales non homogènes dont le groupe d'automorphismes holomorphes possède une structure fixée, la plupart d'entre elles ne sont pas localement algébrisables. Quant aux sous-variétés homogènes, le fait qu'elles soient localement algébrisales doit se discuter au cas par cas ; cette caractéristique ne dépend en effet que de la nature de leur groupe transitif de transformation, lequel permet bien entendu de les reconstruire sans ambiguïté comme l'orbite d'un point donné, du reste quelconque.

Un tel phénomène général de «non-algébrisabilité» locale générique (au sens de R. Baire) laisse entrevoir que les résultats précités, qui utilisent fortement l'algébricité, sont d'une portée restreinte. C'est pourquoi nous préfèrerons raisonner avec des outils purement analytiques, par exemple les espaces de jets (§1.7) ou ce que nous appellerons l'application de réflexion associée à h (§1.12). Commençons par présenter en résumé la géométrie de la complexification extrinsèque de M.

1.3. Minimalité. C'est un principe général, déjà à l'œuvre dans le théorème de C.F. Gauss sur l'existence de coordonnées isothermes, omniprésent dans les mathématiques de la fin du dix-neuvième siècle, dans les travaux d'É. Cartan et dans le développement contemporain de la géométrie CR, qu'il est judicieux d'introduire dès que possible des variables supplémentaires. En suivant S.-S. Chern, J.K. Moser et S.M. Webster ([5], [We1977], [We1978], [MW1983]), remplaçons donc $\bar{t}$ par une variable $\tau \in \mathbb{C}^n$ indépendante ; on obtient la relation vectorielle $\rho'\big(h(t), \overline{h}(\tau)\big) \equiv b(t, \tau)\, \rho(t, \tau)$, qui exprime que l'application formelle *complexifiée* $h^c(t, \tau) := \big(h(t), \overline{h}(\tau)\big)$ de l'application CR formelle h induit une application formelle entre la *complexification de* M, qui est la sous-variété analytique complexe de $\mathbb{C}^{2n}$ définie par $\mathscr{M} := \{(t, \tau) \in \mathbb{C}^n \times \mathbb{C}^n : \rho_j(t, \tau) = 0, j = 1, \ldots, d\}$, et la complexification $\mathscr{M}' := \{(t', \tau') \in \mathbb{C}^{n'} \times \mathbb{C}^{n'} : \rho'_{j'}(t', \tau') = 0, j' = 1, \ldots, d'\}$. Dorénavant, nous raisonnerons le plus souvent possible directement avec les objets géométriques complexifiés.

On vérifie (*voir* le §3.2 pour des explications) que dans tout système de coordonnées holomorphes locales $(z, w) \in \mathbb{C}^m \times \mathbb{C}^d$ telles que $T_0M + \big(\{0\} \times \mathbb{C}^d\big) = T_0\mathbb{C}^n$, la sous-variété complexifiée $\mathscr{M}$ peut être représentée par d équations analytiques complexes graphées de la forme $\xi_j = \Theta_j(\zeta, t)$,

pour $j = 1, \dots, d$, où $\tau = (\zeta, \xi) \in \mathbb{C}^m \times \mathbb{C}^d$. Dans ce système de coordonnées, la collection de séries entières $\Theta_j \in \mathbb{C}\{\zeta, t\}$ est alors unique.

Commençons par présenter en résumé le concept de *minimalité*. On renvoie à la Section 3 pour une exposition de sa signification géométrique. Soit p un point $\mathscr{M}$ de coordonnées $(z_p, w_p, \zeta_p, \xi_p) \in \mathbb{C}^m \times \mathbb{C}^d \times \mathbb{C}^m \times \mathbb{C}^d$. Soit $z_1 \in \mathbb{C}^m$ et soit $\zeta_1 \in \mathbb{C}^m$. On définit les deux applications

(1.4)
$$\begin{cases} \mathscr{L}_{z_1}(z_p, w_p, \zeta_p, \xi_p) := \big(z_p + z_1, \overline{\Theta}(z_p + z_1, \zeta_p, \xi_p), \zeta_p, \xi_p\big) \quad \text{et} \\ \underline{\mathscr{L}}_{\zeta_1}(z_p, w_p, \zeta_p, \xi_p) := (z_p, w_p, \zeta_p + \zeta_1, \Theta(\zeta_p + \zeta_1, z_p, w_p)) . \end{cases}$$

Notons que $\mathscr{L}_{z_1}(p)$ et $\underline{\mathscr{L}}_{\zeta_1}(p)$ appartiennent à $\mathscr{M}$. Itérons ces applications en les composant alternativement l'une avec l'autre : en partant de l'origine $0 \in \mathscr{M}$, définissons $\underline{\Gamma}_1(z_1) := \underline{\mathscr{L}}_{z_1}(0)$, puis

$$\underline{\Gamma}_2(z_1, z_2) := \mathscr{L}_{z_2}(\underline{\mathscr{L}}_{z_1}(0)), \tag{1.5}$$

puis $\underline{\Gamma}_3(z_1, z_2, z_3) := \underline{\mathscr{L}}_{z_3}(\mathscr{L}_{z_2}(\underline{\mathscr{L}}_{z_1}(0)))$, et encore

$$\underline{\Gamma}_4(z_1, z_2, z_3, z_4) := \mathscr{L}_{z_4}(\underline{\mathscr{L}}_{z_3}(\mathscr{L}_{z_2}(\underline{\mathscr{L}}_{z_1}(0)))), \tag{1.6}$$

et ainsi de suite. Pour tout $k \in \mathbb{N}\backslash\{0\}$, on obtient des applications holomorphes locales $\underline{\Gamma}_k$ de $\mathbb{C}^{mk}$ à valeurs dans $\mathscr{M}$ et satisfaisant $\underline{\Gamma}_k(0) = 0$.

Nous dirons que M est *minimale* (au sens de J.-M. Trépreau et A.E. Tumanov) s'il existe un entier μ_0 tel que l'image par $\underline{\Gamma}_{\mu_0}$ d'un voisinage de l'origine arbitrairement petit dans $\mathbb{C}^{m\mu_0}$ contient un voisinage de 0 dans $\mathscr{M}$. On démontre que cette condition est invariante par changement de coordonnées holomorphes locales. C'est tout ce que nous aurons besoin de savoir au sujet de la géométrie de la sous-variété source $\mathscr{M}$.

1.7. Jets de sous-variétés de Segre. Pour le principe de réflexion CR formel, ce sont les équations de la sous-variété image $\mathscr{M}'$ qui joueront le rôle le plus important. Cependant, le défaut majeur des équations analytiques de la forme $\rho'_{j'}(t', \tau') = 0$ réside dans la non-unicité des séries entières $\rho'_{j'}$. En effet, la sous-variété $\mathscr{M}'$ est aussi bien représentée comme le lieu d'annulation de tout autre jeu de d' séries entières analytiques définissantes qui sont de la forme $\widetilde{\rho}'_{j'}(t', \tau') := \sum_{l'=1}^{d'} c'_{j',l'}(t', \tau')\, \rho'_{l'}(t', \tau')$, où la matrice de taille $d' \times d'$ des séries entières $c'_{j',l'} \in \mathbb{C}\{t', \tau'\}$ est inversible. Pour éliminer ce défaut qui pourrait s'avérer gênant (*cf.* les commentaires qui suivent l'énoncé du théorème principal 1.23), il convient de représenter comme un graphe aussi bien $\mathscr{M}'$ que $\mathscr{M}$. Soit donc un système de coordonnées holomorphes locales $(z', w') \in \mathbb{C}^{m'} \times \mathbb{C}^{d'}$ avec $T_0M' + \big(\{0\} \times \mathbb{C}^{d'}\big) = T_0\mathbb{C}^{n'}$, dans lequel la sous-variété complexifiée $\mathscr{M}'$ est représentée par d' équations analytiques complexes de la forme $\xi'_{j'} = \Theta'_{j'}(\zeta', t')$, pour $j' = 1, \dots, d'$, où $\tau' = (\zeta', \xi') \in \mathbb{C}^{m'} \times \mathbb{C}^{d'}$.

Fixons $t' \in \mathbb{C}^{n'}$ et $k \in \mathbb{N}$. La *sous-variété de Segre complexifiée conjuguée* est la sous-variété analytique complexe de $\mathbb{C}^{n'}$ définie par $\underline{\mathscr{S}}'_{t'} := \{(\zeta', \xi') \in \mathbb{C}^{n'} : \xi' = \Theta'(\zeta', t')\}$. Définissons alors l'application de ses

jets d'ordre k explicitement par

$$\varphi'_k(\zeta',\, t') := \left(\zeta',\, \left(\frac{1}{\beta'!}\, \partial^{\beta'}_{\zeta'}\, \Theta'_{j'}(\zeta',\, t')\right)_{1\leq j'\leq d',\, |\beta'|\leq k}\right). \tag{1.8}$$

Elle est à valeurs dans $\mathbb{C}^{m'+N_{d',\, m',\, k}}$, pour un certain entier $N_{d',\, m',\, k}$. Comme l'ont compris K. Diederich et S.M. Webster dans [9], ce sont les propriétés de cette application analytique complexe locale, définie au voisinage de l'origine dans $\mathbb{C}^{m'} \times \mathbb{C}^{n'}$, qui gouvernent les divers principes de réflexion possibles, y compris pour les applications CR formelles. Nous dirons que $\mathscr{M}'$ est

- **(nd1)** *Levi non-dégénérée à l'origine* si φ'_1 est de rang $m'+n'$ en $(\zeta',\, t') = (0,\, 0)$;
- **(nd2)** *finiment non-dégénérée à l'origine* s'il existe un entier k_0 tel que φ'_k est de rang $n'+m'$ en $(\zeta',\, t') = (0,\, 0)$, pour tout $k \geq k_0$;
- **(nd3)** *Essentiellement finie à l'origine* si φ'_k est est une application holomorphe finie en $(\zeta',\, t') = (0,\, 0)$, pour tout $k \geq k_0$;
- **(nd4)** *Segre non-dégénérée à l'origine* s'il existe un entier k_0 tel que la restriction de φ'_k à la sous-variété de Segre complexifiée conjuguée $\underline{\mathscr{L}}'_0$ (qui est de dimension complexe égale à m') est de rang générique égal à m', pour tout $k \geq k_0$;
- **(nd5)** *holomorphiquement non-dégénérée* s'il existe un entier k_0 tel que l'application φ'_k est de rang générique maximal possible, égal à $m'+n'$, pour tout $k \geq k_0$.

On démontre que ces cinq conditions ne dépendent pas du système de coordonnées $(z',\, w')$ dans lequel on a représenté $\mathscr{M}'$ sous la forme $\xi' = \Theta'(\zeta',\, t')$ (*voir* [Me2003] pour les détails).

Bien entendu, par souci de pureté, on pourrait en toute rigueur éviter d'introduire une terminologie spécifique pour de telles conditions de non-dégénérescence. Néanmoins, puisque l'usage a déjà consacré les quatre conditions que sont **(nd1)**, **(nd2)**, **(nd3)** et **(nd5)**, nous adopterons ces dénominations établies, et nous en introduirons de nouvelles ultérieurement.

La nécessité d'introduire la condition **(nd4)** est due à un exemple intéressant que l'on trouve page 721 de [BER2000].

On vérifie (*voir* par exemple [Me2003]) les quatre implications

$$\textbf{(nd1)} \Rightarrow \textbf{(nd2)} \Rightarrow \textbf{(nd3)} \Rightarrow \textbf{(nd4)} \Rightarrow \textbf{(nd5)}, \tag{1.9}$$

dont seule la troisième est non triviale.

Les conditions **(nd2)** et **(nd3)** apparaissent explicitement dans [9]. C.K. Han obtient dans [12] un principe de réflexion avec une formulation différente de **(nd2)**. Il est important de noter que **(nd1)**, **(nd2)** sont des hypothèses de rang constant sur l'application de jets (1.4) ; c'est pourquoi elles sont des plus aisées à manipuler (*cf.* [BER1996], [BER1997], [BER1998], [BER1999a], [BER1999b], [BRZ2001]). Quant à la condition **(nd3)**, elle

n'est pas très éloignée de **(nd2)** du point de vue de la théorie des singularités ; elle a été répétitivement posée comme hypothèse du principe de réflexion analytique, suite au travail [BJT1985] qui développait une technologie adéquate (*cf.* [BR1988], [BR1990], [BR1995], [BER1999a], [CPS1999], [BER2000] et [Da2001] pour une synthèse récente ; voir aussi [8] pour une approche alternative, plus géométrique).

Il est important de remarquer que les quatre premières conditions **(nd1)**, **(nd2)**, **(nd3)** et **(nd4)** sont ponctuelles, tandis que la dernière ne l'est pas, puisqu'il s'agit d'un rang générique. Il existe des exemples de sous-variétés génériques qui sont holomorphiquement non-dégénérées, mais qui ne sont ni finiment non-dégénérées, ni essentiellement finies, ni même Segre non-dégénérées en certains points appartenant à un sous-ensemble analytique réel non vide de M'. Ainsi, la notion de non-dégénérescence holomorphe est la plus fine des cinq.

La condition intermédiaire **(nd4)**, qui apparaît dans [Me2000], est déjà plus délicate. En vérité, pour les sous-variétés M' dites *rigides* dont les fonctions définissantes $\Theta'_{j'} \equiv \Theta'_{j'}(\zeta',\, z')$ ne dépendent pas de w', on vérifie que les conditions **(nd4)** et **(nd5)** sont équivalentes. Comme la condition **(nd5)**, la condition **(nd4)** autorise que les fibres $(\varphi'_k)^{-1}(\varphi'_k(\zeta',\, t'))$ de l'application de jets soient de dimension non localement constante au voisinage de l'origine. Il est bien connu alors que les concepts standard de géométrie différentielle sont insuffisants : on entre dans le domaine de la théorie des singularités analytiques complexes.

Dans [Hi1973], H. Hironaka met au point un procédé d'éclatements locaux successifs qui permet, par transformations strictes successives, de remplacer tout morphisme analytique local par un morphisme «redressé» qui satisfait la condition algébrique dite de «platitude» introduite par J.-P. Serre. Ce théorème dit d'«aplatissement local» implique la constance locale de la dimension des fibres, lorsque les espaces d'arrivée et de but du morphisme «aplati» sont lisses. L'existence de ce procédé suggère de l'appliquer à l'étude des applications CR formelles (*cf.* [Te1996]). Nous avons constaté que cette approche aboutit dans le cas des applications CR définies par des séries entières, mais dans cet article, nous n'utiliserons pas la théorie de H. Hironaka. En effet, grâce à un théorème dit d'approximation dû à M. Artin (*voir* Théorème 2.5 ci-dessous), nous pourrons résumer en partie la complexité causée par les singularités de l'application de jets d'ordre infini (1.4), pour $k = \infty$; l'utilisation de ce théorème dans le sujet remonte à M. Derridj dans [De1986], d'après une suggestion de A. Douady. La complexité de la preuve du résultat principal (Théorème 1.23) ci-dessous demeurera substantielle, car elle implique un grand nombre de collections infinies d'identités formelles.

Dans [Me2002], en utilisant la technique géométrique dite des «disques analytiques», nous avons établi un principe de réflexion pour les difféomorphismes CR de classe $\mathscr{C}^\infty$ entre hypersurfaces analytiques réelles holomorphiquement non-dégénérées. Afin d'obtenir une version de ce résultat

en codimension quelconque, nous pensons que le théorème d'aplatissement local de H. Hironaka, M. Lejeune et B. Tessier devrait être appliqué au morphisme de jets (1.8).

1.10. Non-dégénérescence holomorphe. Dans [St1995] et [St1996], N. Stanton a introduit la non-dégénérescence holomorphe. Elle dit que M' est *holomorphiquement non-dégénérée* s'il n'existe pas de champ de vecteurs $X' = \sum_{i'=1}^{n'} a'_{i'}(t') \frac{\partial}{\partial t'_{i'}}$ *non nul* et à coefficients holomorphes qui est tangent à M'. On démontre que cette définition équivaut à celle que nous avons formulée (*voir* le §3.4 dans [Me2003]).

La condition de non-dégénérescence holomorphe est connue pour être la condition nécessaire la plus naturelle pour qu'un principe de réflexion soit valide (*cf.* le premier article [BR1995] contenant une telle observation dans un cadre algébrique, *cf.* [Me2001a] pour un résultat sans condition de rang dans le cadre algébrique, et *cf.* [Me2002] pour un résultat récent dans le cadre $\mathscr{C}^\infty$). Rappelons-en le principe. Soit $X' := \sum_{i'=1}^{n'} a'_{i'}(t') \frac{\partial}{\partial t'_{i'}}$ un champ de vecteurs non nul et à coefficients holomorphes qui est tangent à M'. Soit $(s', t') \longmapsto \exp(s'X')(t')$ le flot local de X', où $s' \in \mathbb{C}$ et $t' \in \mathbb{C}^{n'}$. Grâce à la condition de tangence, ce flot induit une famille à un paramètre d'automorphismes holomorphes locaux de M'. Dans le §2.16 ci-dessous, nous vérifierons qu'il existe de nombreuses séries entières *non convergentes* $\varpi'(t') \in \mathbb{C}[\![t']\!]$ dont le terme constant est nul, telles que la composition du flot avec la substition du temps complexe s' par $\varpi'(t')$, c'est-à-dire $t' \mapsto_{\mathscr{F}} \exp(\varpi'(t')X')(t')$, est une auto-application CR formelle inversible de M' non convergente. Une obstruction similaire au principe de réflexion se produit lorsque M' est holomorphiquement non-dégénérée, dans la catégoris algébrique, $\mathscr{C}^\infty$ ou $\mathscr{C}^0$.

La simplicité de cette obstruction laisse évidemment deviner que la non-dégénérescence holomorphe pourrait être une condition nécessaire et suffisante à la convergence de h. En supposant M minimale à l'origine, nous établissons la réciproque attendue. C'est notre premier résultat principal, annoncé dans [Me2001c].

Théorème 1.11. Soit $h : (M, 0) \to_{\mathscr{F}} (M', 0)$ une équivalence CR formelle entre sous-variétés de $\mathbb{C}^n$ analytiques réelles, génériques, de même codimension $d \geq 1$ et de même dimension CR égale à $m := n - d \geq 1$. Si M est minimale à l'origine et si M' est holomorphiquement non-dégénérée, l'application CR formelle h est convergente.

Reste à s'interroger sur la nécessité de supposer M minimale à l'origine. On pourrait formuler et démontrer une version formelle du Théorème 2.7 de [Me2001a] énoncé dans un cadre algébrique, ce qui donnerai : si M n'est nulle part minimale et s'il existe un groupe à un paramètre réel d'auto-applications holomorphes locales stabilisant M, il existe de nombreuses auto-applications CR formelles de M qui ne sont pas convergentes.

Par ailleurs, il a été démontré dans [BER1996] que le principe de réflexion algébrique pour les biholomorphismes est valide en supposant seulement que la sous-variété source M est minimale en tout point hors d'un sous-ensemble analytique réel strict. On parle alors de minimalité *en un point Zariski-générique*. Il existe donc une conjecture «folklorique» d'après laquelle le Théorème 1.11 devrait être vrai en supposant seulement que M est minimale en un point Zariski-générique, ce qui signifie qu'elle n'est pas forcément minimale à l'origine, mais qu'elle est minimale en des points arbitrairement proches de l'origine.

Il s'agit là d'une hypothèse fine qui pourrait à nouveau impliquer la théorie des singularités. Pour l'instant, bien que quelques résultats soient connus pour le principe de réflexion $\mathscr{C}^\infty$ entre hypersurfaces non minimales (*cf.* [Eb2002]), aucun analogue formel n'est connu. Les idées font défaut, mais nous considérons que cette question mérite d'être étudiée.

Une version du Théorème 1.11, valable avec l'hypothèse **(nd4)** exprimant que M' est Segre non-dégénérée à l'origine, a été démontrée dans le travail non publié [Me1999]. Pour les applications entre hypersurfaces, le Théorème 1.11 a été démontré d'abord dans la première version de [19], et indépendamment ensuite par N. Mir dans [Mi2000] (publié auparavant), dont la première version contenait aussi une démonstration d'un énoncé plus général : la convergence de l'*application de réflexion* pour les équivalences CR formelles entre hypersurfaces.

1.12. Application de réflexion. Dans le cas d'une variable complexe, le principe de réflexion classique dû à K.H.A. Schwarz est valable sans hypothèse de non-dégénérescence sur la frontière. Cela n'est pas étonnant, puisque tout arc analytique réel est localement biholomorphe à un segment ouvert de l'axe réel. Dès qu'il y a plus de deux variables complexes, il est bien connu que le principe de réflexion pour les applications CR entre hypersurfaces serait faux sans une hypothèse forte de non-dégénérescence, telle que la Levi non-dégénérescence ou telle que la finitude essentielle. Intuitivement parlant, de telles hypothèses expriment que toutes les variables horizontales $z' \in \mathbb{C}^{m'}$ ainsi que les conjuguées complexifiées $\zeta' \in \mathbb{C}^{m'}$ sont (très !) présentes dans les séries définissantes $\Theta'_{j'}(\zeta',\, z',\, w')$ de $\mathscr{M}'$. On peut toutefois se demander s'il n'existe pas une généralisation du principe de réflexion de Schwarz, qui soit valide sans faire aucune hypothèse sur la frontière. Dans un travail antérieur (*voir* [Me1997b] et aussi la remarque page 1098 de l'article [MM1999]), l'auteur a effectivement trouvé un invariant dont les propriétés de régularité sont plus générales que celles de l'application CR.

Pour une application CR formelle $h : (M,\, 0) \longrightarrow_{\mathscr{F}} (M',\, 0)$, cet invariant se présente comme suit. Soient $\xi'_{j'} - \Theta'_{j'}(\zeta',\, t') = 0$, $j' = 1,\, \ldots,\, d'$, des équations complexes arbitraires pour $\mathscr{M}'$ dans un voisinage de l'origine. Alors l'*application de réflexion* associée à h et à ce système de coordonnées s'exprime par une série formelle vectorielle à deux variables $\tau' \in \mathbb{C}^{n'}$

et $t \in \mathbb{C}^n$:

$$\mathscr{R}'_h(\tau',\, t) := \xi' - \Theta'(\zeta',\, h(t)) \in \mathbb{C}[\![\tau',\, t]\!]^{d'}. \tag{1.13}$$

En toute rigueur, cette application $\mathscr{R}'_h$ dépend du système de coordonnées dans lequel on a représenté $\mathscr{M}'$, mais grâce à l'invariance biholomorphe des sous-variétés de Segre, on démontre que la convergence de $\mathscr{R}'_h$, c'est-à-dire la propriété $\mathscr{R}'_h(\tau',\, t) \in \mathbb{C}\{\tau',\, t\}^{d'}$, est une propriété invariante (*voir* la Section 4 ci-dessous). Dans ce mémoire, nous énoncerons et démontrerons un résultat de convergence de $\mathscr{R}'_h$, valable sans aucune hypothèse de non-dégénérescence sur M' : le Théorème principal 1.23 ci-dessous.

1.14. Résultats récents. Au cours de la démonstration des résultats principaux des articles [BJT1985] et [BR1988] (consacrés au principe de réflexion pour les applications CR de classe $\mathscr{C}^\infty$), une expression voisine de (1.13) apparaît, *mais on n'a pas pas vu qu'elle devrait jouir d'une propriété de régularité analytique, même lorsque la sous-variété image M' est très dégénérée*. Pour les applications CR entre hypersurfaces essentiellement finies, le prolongement holomorphe de $\mathscr{R}'_h$ s'identifie au prolongement de h en tant que correspondance, tel qu'il est traité dans [8], [DFY1994], [DP1995], [DP1998], [Sh2000], [PV2001], [13], [Sh2003], parfois avec l'hypothèse plus forte que M' ne contienne pas de courbe holomorphe.

En 1998, inspiré par nos conjectures sur l'application de réflexion dans [Me1997b] et par la remarque de la page 1098 du preprint de [MM1999], N. Mir a démontré de manière indépendante dans [Mi1998] que l'application de réflexion associée à un biholomorphisme entre hypersurfaces algébriques est algébrique. Sa définition de l'application de réflexion élimine la variable ξ' dans (1.13) ; celle-ci a pourtant un sens géométrique, puisque la définition de $\mathscr{R}'_h$ est intrinsèquement reliée aux sous-variétés de Segre complexifiées. Ni dans ce travail, ni dans d'autres travaux ultérieurs [Mi2000], [Mi2002], [BMR2002] consacrés à l'application de réflexion, N. Mir ne traite l'invariance biholomorphe de cette application. Or, pour peu que l'on établisse que l'algébricité de $\mathscr{R}'_h$ est une propriété invariante par changement de coordonnées algébriques (*cf.* [Me2001a] et [Me2002]), le résultat principal de [Mi1998] devient un corollaire élémentaire de [BR1995]. En effet (*cf.* le §11 de [Me2001a]), en déplaçant légèrement le point de référence en un point où l'application de jets (1.8) est de rang localement constant – ce qui est autorisé puisque l'application considérée est déjà holomorphe dans un ouvert – et en éliminant des variables muettes, on se ramène à un biholomorphisme local entre deux sous-variétés algébriques réelles, génériques et finiment non-dégénérées contenues dans des espaces euclidiens complexes de dimensions inférieures ; alors les résultats de [BR1995] (codimension 1) ou de [BER1996] (codimension quelconque) s'appliquent directement. En résumé, pour le principe de réflexion algébrique, l'algébricité de la fonction de réflexion équivaut à l'algébricité d'une application holomorphe entre

sous-variétés génériques de dimension inférieure (*cf.* le Théorème 11.4 de [Me2001a] qui établit cette équivalence sans aucune hypothèse de rang).

En revanche, pour les applications CR formelles (ou $\mathscr{C}^\infty$), il est vraiment impossible de déplacer la situation locale en un point où les singularités de l'application de jets (1.8) disparaissent.

Avant d'énoncer notre résultat principal, présentons une deuxième liste hiérarchisée, comportant cinq conditions CR-horizontales de non-dégénérescence.

1.15. Conditions CR-horizontales de non-dégénérescence. Pour les sous-variétés génériques M' quelconques, sans aucune condition de non-dégénérescence, le principe de réflexion implique déjà des questions délicates, même en supposant, pour simplifier, que l'application h est inversible. Mais puisqu'un grand nombre de raffinements ont eu cours durant la dernière décennie et qu'il est presque toujours possible d'arguer de la «nouveauté» d'un résultat qui suppose l'application h toujours un peu plus dégénérée – pourvu que les techniques connues s'appliquent encore –, nous pensons qu'il est nécessaire d'exposer un principe organisateur pour présenter les conditions de non-dégénérescence sur l'application h.

Pour exprimer ces conditions, travaillons d'emblée avec les équations complexes graphées du §1.3 pour $\mathscr{M}'$, ou plutôt avec les équations conjuguées $w_{j'} = \overline{\Theta}'_{j'}(z', \tau')$, $j' = 1, \ldots, d'$, qui sont équivalentes, d'après le §3.2. Représentons aussi la complexification $\mathscr{M}$ de M par des équations complexes de la forme $w_j = \overline{\Theta}_j(z, \tau)$, $j = 1, \ldots, d$ dans des coordonnées adaptées $t = (z, w) \in \mathbb{C}^m \times \mathbb{C}^d$. Posons $\overline{r}_j(\tau, t) := w_j - \overline{\Theta}_j(z, \tau)$ et $\overline{r}'_{j'}(\tau', t') := w'_{j'} - \overline{\Theta}'_{j'}(z', \tau')$. Par hypothèse, il existe une matrice de taille $d' \times d$ de séries formelles $\overline{b}(\tau, t)$ telle que $\overline{r}'\big(\overline{h}(\tau), h(t)\big) \equiv \overline{b}(\tau, t)\,\overline{r}(\tau, t)$ dans $\mathbb{C}[\![t, \tau]\!]^d$. Décomposons les composantes de l'application d'une manière compatible avec le scindage $(z', w') \in \mathbb{C}^{m'} \times \mathbb{C}^{d'}$ des coordonnées, ce qui donne $h(t) =: (f(t), g(t)) \in \mathbb{C}[\![t]\!]^{m'} \times \mathbb{C}[\![t]\!]^{d'}$. En remplaçant w par $\overline{\Theta}(z, \tau)$ dans l'identité fondamentale $\overline{r}'\big(\overline{h}(\tau), h(t)\big) \equiv \overline{b}(\tau, t)\,\overline{r}(\tau, t)$, le second membre s'annule identiquement et nous obtenons les identités formelles suivantes, valables dans $\mathbb{C}[\![z, \tau]\!]$:

$$g_{j'}\big(z, \overline{\Theta}(z, \tau)\big) \equiv \overline{\Theta}'_{j'}\big(f(z, \overline{\Theta}(z, \tau), \overline{h}(\tau))\big)\,, \tag{1.16}$$

pour $j' = 1, \ldots, d'$. En posant $\tau = 0$ dans ces identités, on obtient les identités

$$g_{j'}\big(z, \overline{\Theta}(z, 0)\big) \equiv \overline{\Theta}'_{j'}\big(f(z, \overline{\Theta}(z, 0), 0)\big)\,. \tag{1.17}$$

Classiquement, on les interprète en exprimant que la restriction de l'application formelle h à la sous-variété de Segre S_0 passant par l'origine, définie par $\{(z, w) \in \mathbb{C}^n : w = \overline{\Theta}(z, 0)\}$, induit une application formelle à valeurs dans la sous-variété de Segre S'_0 de l'espace image définie par $\{(z', w') \in \mathbb{C}^{n'} : w' = \overline{\Theta}'(z', 0)\}$. Alors la restriction de h à S_0 coïncide

avec l'application formelle
(1.18)
$$\mathbb{C}^m \ni z \longmapsto_{\mathscr{F}} \Big(f\big(z,\, \overline{\Theta}(z,\, 0)\big)\,,\ \overline{\Theta}'\big(f\big(z,\, \overline{\Theta}(z,\, 0),\, 0\big)\big)\Big) \in \mathbb{C}^{m'} \times \mathbb{C}^{d'}.$$

Ce sont les propriétés de non-dégénérescence de cette application formelle induite qui gouvernent les divers raffinements possibles du principe de réflexion analytique. Par projection sur le sous-espace $\mathbb{C}^{m'} \times \{0\}$, on peut évidemment identifier cette application avec sa *partie CR-horizontale* définie par

$$\mathbb{C}^m \ni z \longmapsto_{\mathscr{F}} f\big(z,\, \overline{\Theta}(z,\, 0)\big) \in \mathbb{C}^{m'}. \tag{1.19}$$

Avec ces notations, nous pouvons formuler très concrètement cinq conditions sur l'application (1.19), que nous ordonnons par ordre croissant de généralité. L'application CR formelle h sera dite

- **(cr1)** *CR-inversible* à l'origine si $m' = m$ et si sa partie CR-horizontale est une équivalence formelle en $z = 0$;
- **(cr2)** *CR-submersive* à l'origine si $m' \leq m$ et si sa partie CR-horizontale est une submersion formelle en $z = 0$;
- **(cr3)** *CR-finie* à l'origine si $m' = m$ et si sa partie CR-horizontale est une application formelle finie en $z = 0$;
- **(cr4)** *CR-dominante* à l'origine si $m' \leq m$ et si sa partie CR-horizontale est dominante en $z = 0$;
- **(cr5)** *CR-transversale* à l'origine si sa partie CR-horizontale est transversale en $z = 0$;

Nous renvoyons le lecteur au §2.3 pour des définitions complètes de ces cinq conditions de non-dégénérescence, valides dans la catégorie des applications formelles quelconques ; la condition **(cr5)**, qui n'implique *aucune inégalité entre m' et m*, est exprimée *in extenso* au début du §1.21. Bien entendu, en utilisant l'invariance biholomorphe des sous-variétés de Segre, on démontre que ces définitions ne dépendent pas des systèmes de coordonnées dans lesquels on représente M et M'.

Les cinq conditions du §2.3 sont tout à fait classiques en géométrie analytique locale. On vérifie les quatre implications

$$\textbf{(cr1)} \Rightarrow \textbf{(cr2)} \Rightarrow \textbf{(cr3)} \Rightarrow \textbf{(cr4)} \Rightarrow \textbf{(cr5)}, \tag{1.20}$$

pourvu que $m' = m$ dans la deuxième et dans la troisième. Dans le contexte CR, les conditions **(cr1)** et **(cr2)** apparaissent dans [Za1997] ; la condition **(cr3)**, maintenant classique, est une condition naturelle pour les applications CR entre hypersurfaces essentiellement finies ; elle apparaît dans [8], [BR1988] et dans d'autres références. La condition **(cr4)** apparaît dans [BR1990]. Enfin, la condition **(cr5)** apparaît dans [BER2000], avec une appellation différente. Mais dans cette référence, les auteurs supposent la sous-variété M' essentiellement finie : ils travaillent avec la condition **(nd3)**, bien comprise depuis le travail fondateur [BJT1985].

Le préfixe commun aux cinq conditions «CR-» se justifie de la manière suivante : puisque l'espace tangent au point $0 \in \mathscr{S}_0$ coïncide avec l'espace tangent complexe à M en 0, lequel absorbe la *structure CR infinitésimale* de M en 0, on peut penser que l'application formelle induite $h|_{\mathscr{S}_0} : (\mathscr{S}_0, 0) \longrightarrow_{\mathscr{F}} (\mathscr{S}'_0, 0)$ est un «prolongement» de l'application *CR tangente* $dh : T_0^c M \to T_0^c M'$.

Sélectionnons maintenant la condition **(cr5)**, puisque c'est la plus générale.

1.21. Résultat principal. Par définition (*cf.* le §2.3 ci-dessous), une application CR formelle h comme dans le §1.15 est *CR-transversale à l'origine* s'il n'existe pas de série formelle $F'(z'_1, \ldots, z'_{m'}) \in \mathbb{C}[\![z'_1, \ldots, z'_{m'}]\!]$ non nulle telle que l'on a l'identité

$$F'\left(f_1\left(z, \overline{\Theta}(z, 0)\right), \ldots, f_{m'}\left(z, \overline{\Theta}(z, 0)\right)\right) \equiv 0, \tag{1.22}$$

dans $\mathbb{C}[\![z]\!]$. Le résultat principal de cet article, dont le Théorème 1.11 découle en vérité comme corollaire, est le suivant.

Théorème 1.23. Soit $h : (M, 0) \to_{\mathscr{F}} (M', 0)$ une application CR formelle entre deux sous-variétés de $\mathbb{C}^n$, $\mathbb{C}^{n'}$ analytiques réelles, génériques, de codimensions $d \geq 1$, $d' \geq 1$ et de dimensions CR égales à $m := n - d \geq 1$, $m' := n' - d' \geq 1$. Si M est minimale à l'origine et si h est CR-transversale, pour tout système de coordonnées $(z', w') \in \mathbb{C}^{m'} \times \mathbb{C}^{d'}$ dans lequel la complexification $\mathscr{M}'$ est représentée par $\xi' = \Theta'(\zeta', t')$, l'application de réflexion CR formelle associée $\mathscr{R}'_h(\tau', t) := \xi' - \Theta'(\zeta', h(t))$ est convergente.

Dans le §4.30, nous démontrerons que si cette propriété de convergence est satisfaite dans un tel système de coordonnées (z', w'), alors pour tout autre système de coordonnées (z'', w'') centrées à l'origine dans lesquelles la complexification de la sous-variété transformée est représentée par des équations similaires $\xi''_{j'} - \Theta''_{j'}(\zeta'', t'') = 0$, $j' = 1, \ldots, d'$, l'application de réflexion associée est elle aussi convergente.

La force principale de ce théorème réside dans le fait qu'il ne requiert aucune condition de non-dégénérescence sur M'. Comme pour le Théorème 1.11, nous pensons bien entendu qu'il demeure valide en supposant seulement que M est minimale en un point Zariski-générique.

Attention, il y a un piège ! Par souci de généralité, on pourrait être tenté comme dans [BMR2002] de raisonner avec des équations définissantes analytiques réelles arbitraires $\rho'_{j'}(t', \bar{t}') = 0$ pour M', telles qu'introduites dans le §1.1. L'application de réflexion associée serait alors définie par $\widehat{\mathscr{R}}'_h(\tau', t) := \rho'_{j'}(h(t), \tau') \in \mathbb{C}[\![t, \tau']\!]^{d'}$, et le Théorème 1.23 exprimerait, sous les mêmes hypothèses, qu'elle est convergente. Mais en 1997, J.-M. Trépreau nous a fait remarquer qu'un tel énoncé serait trivialement faux.

En effet, choisissons une série entière non convergente $\varpi(z_2) \in \mathbb{C}[\![z_2]\!]$ telle que $\varpi(z_2) = z_2 + \mathrm{O}(z_2^2)$ et considérons l'application formelle définie par $h(z_1, z_2, w) := (z_1, \varpi(z_2), w)$. C'est une équivalence CR formelle entre l'hypersurface algébrique M de $\mathbb{C}^3$ définie par $w = \bar{w} + i z_1 \bar{z}_1$ et (la

même !) l'hypersurface de $\mathbb{C}^3$ définie par $r' = 0$, où $r' := \bar{w}' - w' + iz_1'\bar{z}_1'$. Notons que M' est holomorphiquement dégénérée, puisque le champ holomorphe $\frac{\partial}{\partial z_2'}$ lui est tangent. Il est vrai que l'application de réflexion $\mathscr{R}_h'(\tau',\, t)$ égale à $\xi' - w + iz_1\,\zeta_1'$ est convergente. Par contre, il est vraiment faux que l'application de réflexion associée à une équation définissante arbitraire pour M' est convergente. En effet, prenons par exemple la fonction $\rho'(t',\, \bar{t}') := [1 + z_1'\bar{z}_1' + z_2'\bar{z}_2']\, r'(t',\, \bar{t}')$; son lieu d'annulation coïncide avec M'. Si l'application de réflexion

$$\widehat{\mathscr{R}}_h'(\tau',\, t) := [1 + z_1\zeta_1' + \varpi(z_2)\,\zeta_2'] \cdot [\xi' - w + iz_1\,\zeta_1'] \tag{1.24}$$

était convergente par rapport aux six variables $(z_1,\, z_2,\, w,\, \zeta_1',\, \zeta_2',\, \xi')$, on en déduirait en considérant $\frac{\partial^2}{\partial\zeta_2'\partial\xi'}\widehat{\mathscr{R}}_h'(\tau',\, t)\Big|_{\tau'=0}$ que la série formelle $\varpi(z_2)$ est convergente, ce qui contredirait notre choix initial. Par conséquent, il n'est pas anodin de choisir d'emblée des équations complexes graphées $\xi' = \Theta'(\zeta',\, t')$ pour la représentation de la complexifiée $\mathscr{M}'$ ainsi que pour la définition de l'application de réflexion CR formelle.

Comme nous l'avons mentionné à la fin du §1.11, N. Mir a obtenu dans [Mi2000] une démonstration du Théorème 1.23 pour les équivalences formelles dans le cas $d = d' = 1$, mais la méthode, astucieuse, achoppe dès que la codimension d de M est supérieure ou égale à 2. La première version de [19], qui a circulé avant [Mi2000], contenait seulement le Théorème 1.11 dans le cas $d = d' = 1$. Dans cette référence, l'existence de paires d'identités de réflexion conjuguées apparaissait clairement, bien qu'exploitée de manière insuffisante. En fait, dans la version publiée [19], il a suffi d'inclure le court §9 pour obtenir le Théorème 1.23 pour les équivalences formelles dans le cas $d = d' = 1$. Cette *paire d'identités de réflexion conjuguées* étant absolument cruciale pour la démonstration du Théorème 1.23, nous allons l'exposer dans le §1.25 ci-dessous.

En Mai 2000, une démonstration complète du Théorème 1.23 pour les équivalences CR formelles a été annoncée dans [Me2000]. Cette annonce électronique a donné lieu à la publication résumée [Me2001c]. Sept mois plus tard, en décembre 2000, S.M. Baouendi, N. Mir et L.-P. Rothschild ont annoncé électroniquement le même type de résultats, avec les raffinements attendus sur le rang de l'application h, lesquels ne s'élèvent pourtant que jusqu'au niveau **(cr4)**. Un examen de la publication [BMR2002] à laquelle a donné lieu ce travail (qui ne contient plus les références à nos travaux présentes dans la version électronique) montre que ces auteurs utilisent les paires d'identités de réflexion conjuguées, ce que seul l'ultra-spécialiste peut déceler dans le cœur technique de la démonstration principale (*voir* les équations (5.2) et (5.3), la Proposition 6.1 et le Lemme 7.1 de [BMR2002]). Par ailleurs, ces auteurs, qui n'emploient pas la terminologie «application de réflexion» (utilisée pourtant dans [Mi2000], [Mi2002]), introduisent une notion alternative d'«idéal de Segre», laquelle est définie au moyen d'équations analytiques réelles arbitraires $\rho_{j'}'(t',\, \bar{t}') = 0$ pour

M'. Ce choix pour énoncer leurs théorèmes de convergence, les contraint à quelques circonlocutions, puisque la convergence de $\widehat{\mathscr{R}}'_h(\tau',\, t) := \rho'_{j'}(h(t),\, \tau') \in \mathbb{C}[\![t,\, \tau']\!]^{d'}$ n'est satisfaite que pour les représentants graphés de l'idéal engendré par les séries entières complexifiées $\rho'_{j'}(t',\, \tau')$, comme nous venons de le voir.

En conclusion de ce paragraphe, la prolixité et le raffinement des résultats présentés dans [BMR2002] confinent à un certain hermétisme auquel nous n'adhèrerons jamais, puisque les quatre concepts analytico-géométriques qui sont impliqués dans le sujet sont relativement simples :

- **(1)** Minimalité locale comme propriété des orbites de champs de vecteurs CR complexifiés, dont les sous-variétés intégrales coïncident avec les sous-variétés de Segre complexifiées (Section 3) ;
- **(2)** jets d'ordre k des sous-variétés de Segre complexifiées et diverses conditions de non-dégénérescence (Section 4) ;
- **(3)** application de réflexion CR comme invariant fondamental qui jouit de propriétés de régularité (Sections 1, 5 et 6) ;
- **(4)** conditions de non-dégénérescence CR-horizontales (Section 1) ;

Ce sont ces hypothèses multiples, combinées souvent à l'alternative entre catégorie algébrique et catégorie analytique, qui sont responsables de la combinatoire de théorèmes possibles publiés récemment sur le principe de réflexion analytique. Toutefois, cette diversité s'exerce au détriment de résultats plus rares où une difficulté substantielle a été surmontée et elle occulte leur repérage.

Exposons maintenant le point-clé qui est à la base de la démonstration du Théorème 1.23.

1.25. Paire d'identités de réflexion conjuguées. Soient $w_j = \overline{\Theta}_j(z,\, \tau)$, $j = 1,\, \ldots,\, d$ un système de d équations complexes graphées pour la complexification $\mathscr{M}$ de M et soient $\xi_j = \Theta_j(\zeta,\, t)$, $j = 1,\, \ldots,\, d$, les équations conjuguées. On considère la paire de systèmes de m champs de vecteurs holomorphes tangents à $\mathscr{M}$ définis comme suit :

$$
\text{(1.26)} \qquad \begin{cases} \mathscr{L}_k := \dfrac{\partial}{\partial z_k} + \displaystyle\sum_{j=1}^{d} \dfrac{\partial \overline{\Theta}_j}{\partial z_k}(z,\, \tau)\, \dfrac{\partial}{\partial w_j}, \quad k = 1, \ldots,\, m, \\[2ex] \underline{\mathscr{L}}_k := \dfrac{\partial}{\partial \zeta_k} + \displaystyle\sum_{j=1}^{d} \dfrac{\partial \Theta_j}{\partial \zeta_k}(\zeta,\, t)\, \dfrac{\partial}{\partial \xi_j}, \quad k = 1, \ldots,\, m. \end{cases}
$$

Par hypothèse, l'application CR formelle $h(t) = (f(t),\, g(t)) \in \mathbb{C}[\![t]\!]^{m'} \times \mathbb{C}[\![t]\!]^{d'}$ satisfait les d' identités formelles (1.16) et leurs conjuguées complexifiées, que nous écrirons ensemble comme suit :

$$
\text{(1.27)} \qquad \begin{cases} \overline{g}_{j'}\left(\zeta,\, \Theta(\zeta,\, t)\right) \equiv \Theta'_{j'}\left(\overline{f}(\zeta,\, \Theta(\zeta,\, t)),\, h(t)\right), \\ g_{j'}\left(z,\, \overline{\Theta}(z,\, \tau)\right) \equiv \overline{\Theta}'_{j'}\left(f\left(z,\, \overline{\Theta}(z,\, \tau)\right),\, \overline{h}(\tau)\right). \end{cases}
$$

On les abrègera en les écrivant $g(t) = \overline{\Theta}'\big(f(t), \overline{h}(\tau)\big)$ et $\overline{g}(\tau) = \Theta'\big(\overline{f}(\tau), h(t)\big)$, étant entendu que $(t, \tau) \in \mathscr{M}$. Développons les fonctions $\Theta'_{j'}$ par rapport aux puissances de ζ' : on obtient des expressions de la forme $\Theta'_{j'}(\zeta', t') = \sum_{\gamma' \in \mathbb{N}^{m'}} (\zeta')^{\gamma'} \Theta'_{j', \gamma'}(t')$, avec des séries entières convergentes $\Theta'_{j', \gamma'}(t') \in \mathbb{C}\{t'\}$ qui satisfont bien sûr une estimée de Cauchy, puisque les fonctions $\Theta'_{j'}(\zeta', t')$ sont holomorphes par rapport aux deux variables ζ' et t'. En utilisant ce développement, nous pouvons tout d'abord réécrire l'application de réflexion (1.13) sous la forme plus explicite

$$\mathscr{R}'_h(\tau', t) = \xi' - \sum_{\gamma' \in \mathbb{N}^{m'}} (\zeta')^{\gamma'} \Theta'_{\gamma'}(h(t)). \tag{1.28}$$

Dans la Section 5 ci-dessous, nous établirons que la convergence de l'application de réflexion est équivalente à la convergence de la collection infinie de séries formelles $\Theta'_{j', \gamma'}(h(t))$, pour tous $j' = 1, \ldots, d'$ et tous $\gamma' \in \mathbb{N}^{m'}$. Nous appellerons *composantes de l'application de réflexion* ces séries formelles $\Theta'_{j', \gamma'}(h(t))$, parfois notées sous la forme vectorielle abrégée $\Theta'_{\gamma'}(h(t))$.

En utilisant le même développement partiel en séries entières des $\Theta'_{j', \gamma'}(\zeta', t')$, on peut aussi réécrire les relations fondamentales (1.27) sous une forme plus explicite, dont le mérite principal est de faire clairement apparaître toutes les composantes de l'application de réflexion :

$$\begin{cases} \overline{g}(\tau) = \displaystyle\sum_{\gamma' \in \mathbb{N}^{m'}} \overline{f}(\tau)^{\gamma'} \Theta'_{\gamma'}(h(t)), \\ g(t) = \displaystyle\sum_{\gamma' \in \mathbb{N}^{m'}} f(t)^{\gamma'} \overline{\Theta}'_{\gamma'}\big(\overline{h}(\tau)\big), \end{cases} \tag{1.29}$$

où $(t, \tau) \in \mathscr{M}$. Venons-en maintenant aux identités de réflexion. Pour un multiindice arbitraire $\beta = (\beta_1, \beta_2, \ldots, \beta_m) \in \mathbb{N}^m$, on note $\mathscr{L}^\beta$ et $\underline{\mathscr{L}}^\beta$ les dérivations holomorphes et antiholomorphes d'ordre $|\beta|$ définies par

$$\begin{cases} \mathscr{L}^\beta := (\mathscr{L}_1)^{\beta_1} (\mathscr{L}_1)^{\beta_2} \cdots (\mathscr{L}_m)^{\beta_m} \quad \text{et} \\ \underline{\mathscr{L}}^\beta := (\underline{\mathscr{L}}_1)^{\beta_1} (\underline{\mathscr{L}}_1)^{\beta_2} \cdots (\underline{\mathscr{L}}_m)^{\beta_m}. \end{cases} \tag{1.30}$$

Classiquement, on applique les dérivations antiholomorphes $(\underline{\mathscr{L}}_1)^{\beta_1} (\underline{\mathscr{L}}_1)^{\beta_2} \cdots (\underline{\mathscr{L}}_m)^{\beta_m}$ au premier jeu d'équations (1.29). De manière équivalente, à une conjugaison près, on pourrait appliquer les dérivations conjuguées $(\mathscr{L}_1)^{\beta_1} (\mathscr{L}_1)^{\beta_2} \cdots (\mathscr{L}_m)^{\beta_m}$ au second jeu d'équations (1.29). Au total, les deux procédés reviennent à choisir une fois pour toutes les variables t ou les variables $\overline{t}$ pour écrire les identités de réflexion. C'est le point de vue qui est adopté dans tous les travaux consacrés au principe de réflexion analytique que sont [22], [Le1977], [We1978], [We1982], [9], [12], [De1985], [BJT1985], [BR1988], [Pu1990], [BR1990], [BR1995], [27], [BER1996], [BER1997], [Mi1998], [BER1999a], [CMS1999], [CPS1999], [BER1999b], [CPS2000], [BER2000], [Me2001a], [BRZ2001], [Me2002],

[Eb2002], [CDMS2002], [MMZ2002] et [MMZ2003]. Nous l'analyserons dans le §1.33 ci-dessous.

Respectons une exigence de complétude : nous disposons de deux jeux de d' équations formelles fondamentales (1.29) et de deux jeux infinis de dérivations fondamentales (1.30). Au total, ce ne sont donc pas deux mais quatre identités de réflexion que nous devrions obtenir.

Pour les écrire, on observe que $\underline{\mathscr{L}}_k(h) \equiv 0$ et que $\mathscr{L}_k\left(\overline{h}\right) \equiv 0$ pour $k = 1, \ldots, m$, ce qui est évident d'après les formules (1.26). Il en découle que $\underline{\mathscr{L}}^\beta(h) \equiv 0$ et que $\mathscr{L}^\beta\left(\overline{h}\right) \equiv 0$ puis aussi $\underline{\mathscr{L}}^\beta\Theta'_{\gamma'}(h) \equiv 0$ et $\mathscr{L}^\beta\left(\overline{\Theta}'\left(\overline{h}\right)\right) \equiv 0$, pourvu bien sûr que $\beta \neq 0$.

Ainsi, en appliquant les dérivations (1.30) pour $\beta \neq 0$ aux identités (1.29), on obtient quatre familles infinies d'identités de réflexion. Disposons-les en deux paires conjuguées comme suit : première paire :

$$\text{(1.31)} \qquad \begin{cases} \underline{\mathscr{L}}^\beta\,\overline{g}(\tau) \;=\; \displaystyle\sum_{\gamma'\in\mathbb{N}^{m'}} \underline{\mathscr{L}}^\beta\left[\overline{f}(\tau)^{\gamma'}\right]\,\Theta'_{\gamma'}(h(t)), \\ 0 \;=\; \displaystyle\sum_{\gamma'\in\mathbb{N}^{m'}} f(t)^{\gamma'}\,\underline{\mathscr{L}}^\beta\left[\overline{\Theta}'_{\gamma'}\left(\overline{h}(\tau)\right)\right]; \end{cases}$$

seconde paire, conjuguée (modulo transposition) de la première :

$$\text{(1.32)} \qquad \begin{cases} \mathscr{L}^\beta g(t) \;=\; \displaystyle\sum_{\gamma'\in\mathbb{N}^{m'}} \mathscr{L}^\beta\left[f(t)^{\gamma'}\right]\,\overline{\Theta}'_{\gamma'}\left(\overline{h}(\tau)\right), \\ 0 \;=\; \displaystyle\sum_{\gamma'\in\mathbb{N}^{m'}} \overline{f}(\tau)^{\gamma'}\,\mathscr{L}^\beta\left[\Theta'_{\gamma'}(h(t))\right]. \end{cases}$$

Bien entendu, $\beta \neq 0$ et $(t, \tau) \in \mathscr{M}$. Les deux paires (1.31) et (1.32) sont donc conjuguées terme à terme (modulo une transposition) ; elles ne sont donc pas essentiellement distinctes. Mais dans chacune des deux paires, une différence importante est à noter : tandis que ce sont *a priori* toutes les composantes $\overline{f}_{k'}$ et $\overline{g}_{j'}$ de l'application $\overline{h}$ que l'on différentie dans la première identité (1.31), ce sont les composantes conjuguées de l'application de réflexion $\overline{\Theta}'_{\gamma'}\left(\overline{h}(\tau)\right)$ que l'on différentie à la seconde ligne.

La différence a son importance pour la raison suivante. D'après la propriété mentionnée après (1.28), le Théorème 1.23 énonce essentiellement que les composantes $\Theta'_{\gamma'}(h(t))$ de l'application de réflexion sont des séries convergentes. Il n'énonce nullement que toutes les composantes de l'application $h(t)$ sont convergentes. L'exemple élémentaire discuté après le Théorème 1.23 (ou d'autres analogues) montre qu'en général, aucune contrainte de convergence n'est exercée sur les composantes de h qui n'apparaissent pas dans les composantes de l'application de réflexion. C'est pourquoi la première identité de réflexion (1.31) a le défaut majeur de faire intervenir inévitablement les dérivées d'éventuelles «mauvaises» composantes de h, tout du moins celles qui ne sont pas intrinsèquement liées à l'application invariante $\mathscr{R}'_h$. Au contraire, dans la seconde identité (1.31)

(tout aussi bien que dans la première identité (1.32)), on différentie les vrais objets invariants que sont les composantes $\overline{\Theta}'_{\gamma'}\left(\overline{h}\right)$ (ou leurs conjuguées $\Theta'_{\gamma'}(h)$).

À notre connaissance, les seuls travaux dans lesquels on considère aussi les seconde identités de réflexion (1.31) (ainsi que sa conjuguée, la première identité de (1.32)) sont : [19], [Me2001c] et [BMR2002]. Avant de poursuivre le commentaire, passons en revue ce qu'il est possible d'énoncer au moyen de la première identité de réflexion (1.31).

1.33. Conditions de non-dégénérescence sur h. Au lieu de formuler conjointement des conditions de non-dégénérescence sur M' avec des conditions de non-dégénérescence CR-horizontales sur h (*cf.* [BR1988], [BER1997], [BER1998], [Za1997], [BER1999a], [BER1999b], [BER2000], [BRZ2001] et [BMR2002]), formulons des conditions de non-dégénérescence sur les premières identités de réflexion (1.31) (*cf.* [Ha1990], [27], [CPS1999], [Me1999], [Da2001]). Pour cela, introduisons une collection infinie de séries entières formelles dépendant des trois variables $t \in \mathbb{C}^n$, $\tau \in \mathbb{C}^n$ (avec $(t,\,\tau) \in \mathscr{M}$) et $t' \in \mathbb{C}^{n'}$, laquelle est définie en remplaçant $h(t)$ par t' dans la première ligne de (1.31), ce qui donne :

$$\Psi'_{j',\,\beta}(t,\,\tau,\,t') := \underline{\mathscr{L}}^{\beta}\,\overline{g}_{j'} - \sum_{\gamma' \in \mathbb{N}^{m'}} \underline{\mathscr{L}}^{\beta}\left[\overline{f}^{\gamma'}\right]\,\Theta'_{j',\,\beta}(t'), \tag{1.34}$$

pour $j' = 1,\,\ldots,\,d'$ et $\beta \in \mathbb{N}^m$. Dans (1.36) ci-dessous, on notera aussi ces séries $\Psi'_{j',\,\beta}(z,\,w,\,\zeta,\,\xi,\,t')$.

Soit $k \in \mathbb{N}$. En ne considérant que les multiindices $\beta \in \mathbb{N}^m$ de longueur $|\beta| \leq k$, et en posant $(t,\,\tau) := 0$, définissons l'application formelle suivante, qui est à valeurs dans $\mathbb{C}^{N_{d',\,n',\,k}}$ pour un certain entier $N_{d',\,n',\,k}$:

$$\psi'_k :\ t' \longmapsto \left(\Psi'_{j',\,\beta}(0,\,0,\,t')\right)_{1 \leq j' \leq d',\,|\beta| \leq k}. \tag{1.35}$$

Puisque les termes $\underline{\mathscr{L}}^{\beta}\,\overline{g}_{j'}$ et $\underline{\mathscr{L}}^{\beta}\left[\overline{f}^{\gamma'}\right]$ sont constants lorsque l'on pose $(t,\,\tau) = (0,\,0)$, l'application ψ'_k est holomorphe au voisinage de l'origine.

L'application CR formelle h sera dite

- **(h1)** *Levi non-dégénérée* à l'origine si ψ'_1 est de rang n' en $t' = 0$;
- **(h2)** *finiment non-dégénérée* à l'origine s'il existe un entier ℓ_0 tel que ψ'_k est de rang n' en $t' = 0$ pour tout $k \geq \ell_0$;
- **(h3)** *essentiellement finie* à l'origine s'il existe un entier ℓ_0 tel que ψ'_k est une application holomorphe finie pour tout $k \geq \ell_0$;
- **(h4)** *Segre non-dégénérée* à l'origine s'il existe des entiers $j'(1),\,\ldots,\,j'(n')$ satisfaisant $1 \leq j'(i'_1) \leq d'$ pour $i'_1 = 1,\,\ldots,\,n'$, et des multiindices distincts $\beta(1),\,\ldots,\,\beta(n') \in \mathbb{N}^m$ tels que le

déterminant suivant :

$$\det\left(\frac{\partial \Psi'_{j'(i'_1),\beta(i'_1)}}{\partial t'_{i'_2}}\left(z,\,\overline{\Theta}(z,\,0),\,0,\,0,\,h\left(z,\,\overline{\Theta}(z,0)\right)\right)\right)_{1\leq i'_1,\,i'_2\leq n'} \tag{1.36}$$

ne s'annule pas identiquement dans $\mathbb{C}[\![z]\!]$.

On vérifie que ces quatre conditions ne dépendent pas du sytème de coordonnées holomorphes locales dans lequel la sous-variété M' est représentée par $\xi' = \Theta'(\zeta',\,t')$ (*cf.* [Me2003]). La condition **(h1)** apparaît dans [27] ainsi que dans d'autres références précédentes ; la condition **(h2)** apparaît dans [La2000] ; la condition **(h3)** apparaît dans [CPS1999], [Me1999], [Da2001] et [DM2002] ; ces références expriment la condition **(h3)** en disant, de manière équivalente, que la *variété caractéristique* $\mathbb{V}'_0 := \{t' : \Psi'_{j',\beta}(0,\,0,\,t') = 0,\ j' = 1,\,\ldots,\,d',\ \beta \in \mathbb{N}^m\}$, qui est un sous-ensemble analytique complexe de $\mathbb{C}^{n'}$ passant par l'origine, est de dimension zéro en $t' = 0$; enfin, la condition nouvelle **(h4)** apparaît dans [Me1999].

Avant de présenter les quatre principes de réflexion auxquels donnent naissance les quatre conditions **(h1)**, **(h2)**, **(h3)** et **(h4)**, nous voudrions mentionner qu'elles sont satisfaites si l'on effectue une hypothèse de non-dégénérescence sur M' combinée à une hypothèse de non-dégénérescence CR-horizontale sur h.

Proposition 1.37. *Supposons h CR-transversale à l'origine.*

- **(1)** *Si M' est Levi non-dégénérée à l'origine, h est finiment non-dégénérée à l'origine.*
- **(2)** *Si M' est finiment non-dégénérée à l'origine, h est finiment non-dégénérée à l'origine.*
- **(3)** *Si M' est essentiellement finie à l'origine, h est essentiellement finie à l'origine.*
- **(4)** *Si M' est Segre non-dégénérée à l'origine, h est Segre non-dégénérée à l'origine.*

Puisque la condition **(cr5)** est la plus générale, cette proposition se démultiplie en quatre autres propositions énoncées avec **(cr1)**, avec **(cr2)**, avec **(cr3)** ou avec **(cr4)** à la place de **(cr5)**. Une partie de ces vingt assertions, mais pas la totalité, se trouve implicitement démontrée dans les travaux de S.M. Baouendi, L.P. Rothschild et divers co-auteurs. Pour la démonstration relativement technique de ce résultat que nous n'utiliserons pas, nous renvoyons le lecteur au Théorème 4.3.1 de [Me2003].

Mentionnons toutefois les quatre observations :

- **(1)** h Levi non-dégénérée $\Rightarrow$ M' Levi non-dégénérée ;
- **(2)** h finiment non-dégénérée $\Rightarrow$ M' finiment non-dégénérée ;
- **(3)** h essentiellement finie $\Rightarrow$ M' essentiellement finie ;
- **(4)** h Segre non-dégénérée $\Rightarrow$ M' Segre non-dégénérée.

Chacune de ces implications est stricte, comme le montreraient des exemples élémentaires analogues à ceux qui sont développés dans [Me2001d].

La condition de CR-transversalité sur h est la condition la plus fine qu'il faut ajouter pour garantir les réciproques de ces implications.

1.38. Quatre principes de réflexion CR formels pour h. Ainsi, travaillons directement avec les quatre conditions de non-dégénérescence sur h.

Théorème 1.39. ([Me1999], Theorem 1.2.1) Soit $h : (M, 0) \to_{\mathscr{F}} (M', 0)$ une application CR formelle entre deux sous-variétés de $\mathbb{C}^n$, $\mathbb{C}^{n'}$ analytiques réelles, génériques, de codimensions $d \geq 1$, $d' \geq 1$ et de dimensions CR égales à $m := n - d \geq 1$, $m' := n' - d' \geq 1$. Si M est minimale à l'origine et si

- **(i)** h est Levi ou finiment non-dégénérée à l'origine ; ou si
- **(ii)** h est essentiellement finie à l'origine ; ou si
- **(iii)** h est Segre non-dégénérée à l'origine,

h est convergente.

La partie **(i)** est essentiellement démontrée dans [BER1997] et [BER1998] (*voir* aussi [La2000]). La partie **(ii)** est essentiellement démontrée dans [BER2000], grâce à une variation sur les arguments classiques de [BJT1985], mais avec des conditions de non-dégénérescence séparées sur M' et sur h. On trouve une copie conforme de cette démonstration relativement complexe dans [Mi2002], où la condition **(h3)** est empruntée à [CPS1999] et à [Me1999]. Le Théorème 1.2 de [DM2002] coïncide avec ce même résultat, mais grâce à l'argument élémentaire de tranchage tiré de [Me1999], on peut affirmer que la complexité de la preuve donnée dans [BER2000] ou dans [Mi2002] n'a pas lieu d'être. Répétons que la condition **(h3)** est paradigmatique depuis le travail classique [BJT1985].

Lorsque **(h1)** ou **(h2)** est satisfaite, en appliquant le théorème des fonctions implicites, on démontre qu'il existe un entier $\ell_0 \geq 1$ et une application Φ holomorphe locale telle que les identités de réflexion apparaissant à la première ligne de (1.31) se résolvent par rapport à $h(t)$, grâce au théorème des fonctions implicites, sous la forme :

$$h(t) \equiv \Phi\left(t,\, \tau,\, J_\tau^{\ell_0}\, \overline{h}(\tau)\right), \tag{1.40}$$

pour $(t, \tau) \in \mathscr{M}$ (le §5.2 ci-dessous fournit les détails). Ici, la notation $J_\tau^{\ell_0}\overline{h}(\tau)$ désigne le jet d'ordre ℓ_0 de $\overline{h}(\tau)$. Une telle relation remonte aux travaux fondateurs de S. Pinchuk [22] et H. Lewy [Le1977]. Elle est appelée *identité de réflexion basique* dans [BER1999a]. Afin de rendre plus accessible la démonstration du Théorème 1.23, nous reconstituerons la démonstration très simple de la convergence de h sous cette hypothèse dans la Section 5, en utilisant notre propre formalisme.

Lorsque **(h3)** est satisfaite, on démontre grâce à un procédé d'élimination algébrique standard (*cf.* les travaux [BJT1985], [BER1999a] reprenant les détails de ce procédé bien connu depuis le traité de Van der Waerden [VdW1970]), qu'il existe un entier $\ell_0 \geq 1$ et n' polynômes tels que

les identités de réflexion qui apparaissent à la première ligne de (1.31) fournissent une «quasi-résolution polynomiale» de $h(t)$ par rapport au jet d'ordre ℓ_0 de $\overline{h}(\tau)$, c'est-à-dire que l'on a n' relations polynomiales de la forme

$$h_{i'}(t)^{N(i')} + \sum_{1\leq k'\leq N(i')} A'_{i',\,k'}\left(t,\,\tau,\,J^{\ell_0}_{\tau}\overline{h}(\tau)\right)\,h_{i'}(t)^{N(i')-k'} \equiv 0, \tag{1.41}$$

pour $i' = 1,\,\ldots,\,n'$ et pour $(t,\,\tau) \in \mathscr{M}$, où les $A'_{i',\,k'}$ sont des applications holomorphes locales. Nous renvoyons au Théorème 1.2 de [DM2002] pour une démonstration épurée de la convergence de h sous cette hypothèse.

Enfin, dans la Section 6, nous exposerons la démonstration non publiée du Théorème 1.39 **(iii)** contenue dans [Me1999].

1.42. Absence de finitude relative dans le cas analytique réel. Il y a une explication au fait que la seconde collection d'identités de réflexion n'est généralement pas considérée dans les références précitées. En effet, les hypothèses de non-dégénérescence du type **(h1)**, **(h2)**, **(h3)** ou **(h4)** permettent toutes de ramener l'infinité des identités de réflexion à un nombre fini de relations de dépendance entre les composantes $h_{i'}(t)$ et un jet d'ordre fini $J^{\ell_0}_{\tau}\overline{h}(\tau)$ de l'application formelle conjuguée. L'essence même du principe de réflexion de Schwarz à une ou plusieurs variables complexes se joue dans la possibilité d'exprimer h en fonction de $\overline{h}$ – cela est bien connu. Mais lorsque M' n'est ni finiment non-dégénérée ni essentiellement finie, une telle résolution est impossible : aucune version du théorème des fonctions implicites n'est valide lorsque le morphisme des k-jets de sous-variétés de Segre (1.8) est d'une complexité arbitraire. En général, il est donc nécessaire de considérer l'infinité des séries $\Theta'_{j',\,\gamma'}(h(t))$.

Il y a pourtant un cas où une résolution finie est possible : c'est lorsque M' est algébrique. En fait, dans [Mi2002], N. Mir obtient le Théorème 1.23 pour les applications CR-dominantes en supposant M' algébrique, car dans ce cas (subrepticement simplifié), toutes les séries $\{\Theta'_{j',\,\gamma'}(t')\}_{1\leq j'\leq d',\,\gamma'\in\mathbb{N}^{m'}}$ sont alors *algébriquement dépendantes* par rapport à un nombre *fini* d'entre elles. Grâce à cette propriété cruciale de finitude, on peut obtenir des identités de réflexion analogues à (1.41) : pour toute composante $\Theta'_{j',\,\gamma'}(h(t))$ de l'application de réflexion, il existe une relation polynomiale, satisfaite pour $(t,\,\tau) \in \mathscr{M}$:

$$\sum_{0\leq k'\leq N'_0} A'_{k'}\left(t,\,\tau,\,J^{\ell_0}_{\tau}\overline{h}(\tau)\right)\,\left[\Theta'_{j',\,\gamma'}(h(t))\right] = 0, \tag{1.43}$$

où chaque ℓ_0, chaque N'_0 et chaque série analytique $A'_{k'}$ dépend de j' et de γ'.

Au contraire, dans la catégorie analytique réelle, il est absolument faux qu'étant donné un nombre infini de séries entières convergentes $\varphi_k(\mathsf{x}) \in \mathbb{C}\{\mathsf{x}\}$, $k = 1, 2, 3, \ldots, \infty$, $\mathsf{x} \in \mathbb{C}^n$, $n \geq 1$, il en existe un entier $N \geq 1$ tel que pour tout $k \geq N+1$, il existe une application holomorphe locale $G_k(\mathsf{x},\,\mathsf{X}_1,\,\ldots,\,\mathsf{X}_N,\,Y_k)$ telle que $G_k\left(\mathsf{x},\,h_1(\mathsf{x}),\,\ldots,\,h_N(\mathsf{x}),\,h_k(\mathsf{x})\right)$

$\equiv 0$. Ce phénomène est relié à un exemple classique dû à Osgood, aux de travaux de A.M. Gabrielov, de E. Bierstone, P.D. Milman, de B. Malgrange ; il exhibe une différence majeure avec la géométrie algébrique locale. Aussi, l'utilisation des conditions de non-dégénérescence dans les travaux antérieurs était-elle cruciale, puisqu'à chaque étape de la démonstration, on peut substituer à la considération de l'*infinité* de séries formelles $\{\Theta'_{j',\gamma'}(h(t))\}_{1\leq j'\leq d',\,\gamma'\in\mathbb{N}^{m'}}$ celle des n composantes de h seulement. Dans ce cas, toutes les $\{\Theta'_{j',\gamma'}(h(t))\}_{1\leq j'\leq d',\,\gamma'\in\mathbb{N}^{m'}}$ sont clairement holomorphes respectivement à $(h_1(t),\,\ldots,\,h_{n'}(t))$. Mais ici, dans le cas général, on travaillera directement avec cette collection infinie $\{\Theta'_{j',\gamma'}(h(t))\}_{1\leq j'\leq d',\,\gamma'\in\mathbb{N}^{m}}$, en utilisant de manière cruciale les deux paires d'identités de réflexion conjuguées (1.31) et (1.32) (*voir* le §7.61 ci-dessous).

1.44. Applications. Terminons cette introduction par l'énoncé de deux applications principales. D'après le Théorème 1.11, les composantes $\Theta'_{j',\gamma'}(h(t))$ de l'application de réflexion associée à une équivalence formelle sont convergentes : elles s'identifient à des séries convergentes $\theta'_{j',\gamma'}(t)\in\mathbb{C}\{t\}$. En appliquant le théorème d'approximation de M. Artin aux équations analytiques $\Theta'_{j',\gamma'}(h(t))-\theta'_{\gamma'}(t)\equiv 0$ satisfaites par l'application formelle $h(t)\in\mathbb{C}[\![t]\!]^{n'}$, on déduit l'existence d'une application convergente $\mathsf{H}(t)\in\mathbb{C}\{t\}^{n'}$ telle que $\Theta'_{j',\gamma'}(\mathsf{H}(t))-\theta'_{j',\gamma'}(t)\equiv 0$. Dans le §7.146, nous vérifierons qu'une telle application $\mathsf{H}(t)$ établit un biholomorphisme local entre M et M'. Ainsi :

Corollary 1.45. *Deux sous-variétés de $\mathbb{C}^n$ analytiques réelles génériques et minimales sont formellement équivalentes si et seulement si elles sont biholomorphes.*

Ce résultat a été obtenu dans [BER1997] par S.M. Baouendi, P. Ebenfelt et L.P. Rothschild avec l'hypothèse simple de non-dégénérescence finie. Ici, nous l'obtenons sans hypothèse de non-dégénérescence sur M', mais en utilisant fortement la minimalité. Nous pensons qu'il devrait être vrai sans aucune hypothèse sur les sous-variétés M et M' formellement équivalentes, excepté le fait qu'elles sont génériques.

Grâce au même argument d'approximation, on peut aussi déduire du Théorème 1.23 que pour tout entier $N\geq 1$, il existe une une application $\mathsf{H}^N(t)\in\mathbb{C}\{t\}^N$ dont la série de Taylor coïncide avec celle de h jusqu'à l'ordre $(N-1)$ compris, telle que $\mathsf{H}^N(t)$ établit une application holomorphe locale de M à valeurs dans M' (*voir* le Corollaire 7.147).

Enfin, dans le §2.20 nous établirons le corollaire suivant qui donne un critère général pour la convergence de h.

Corollary 1.46. *Sous les hypothèses du Théorème 1.23, supposons de plus qu'il existe des entiers $j'(1),\,\ldots,\,j'(n')$ tels que $1\leq j'(i'_1)\leq n'$ pour $i'_1=1,\,\ldots,\,n'$ et des multiindices distincts $\gamma'(1),\,\ldots,\,\gamma'(n')\in\mathbb{N}^{m'}$ tels*

que le déterminant suivant :

$$\det\left(\frac{\partial\Theta'_{j'(i'_1),\,\gamma'(i'_1)}}{\partial t'_{i'_2}}(h(t))\right)_{1\leq i'_1,\,i'_2\leq n'} \tag{1.47}$$

ne s'annule pas identiquement dans $\mathbb{C}[\![t]\!]$. *Alors* M' *est holomorphiquement non-dégénérée et* h *est convergente.*

Notre premier Théorème 1.11 découle en vérité comme conséquence directe du Théorème 1.23 et de ce corollaire (*voir* §2.20).

1.48. Remarque finale. Le lecteur aura remarqué que cette introduction contient de nombreuses références aux travaux de S.M. Baouendi, de P. Ebenfelt, de F. Meylan, de N. Mir, de L.P. Rothschild et de D. Zaitsev. Durant la période 1998–2004, ces auteurs ont régulièrement suivi l'évolution de nos travaux, publiés dans des revues spécialisées ou prépubliés électroniquement. Tous nos travaux sur les applications CR font référence à leurs travaux. En revanche, pour la période 1998–2004, force est de constater qu'il n'existe qu'une seule publication de ces auteurs, groupée ou individuelle, dont la *bibliographie* contienne une référence à l'un de nos travaux : il s'agit du livre [BER1999a], qui cite notre travail de thèse paru en 1997, portant sur les singularités éliminables pour les fonctions CR (un autre sujet de recherche) ainsi que l'article [MM1999], écrit en 1997. Insistons sur le fait que cette absence de citation est constatable non seulement dans les travaux que nous citons ici, mais aussi dans *tous les autres travaux* (*pré*)*publiés par ces auteurs durant cette période*. Les travaux de N. Mir, très proches des nôtres, constituent le cas le plus frappant d'absence de citation bibliographique. Pour cette raison, nous nous devions de détailler dans cette introduction la chronologie précise de l'apparition des résultats récents sur les applications CR formelles.

1.49. Remerciement. Je remercie vivement F. Panigeon pour ses relectures minutieuses sur écran.

§2. Préliminaire : séries formelles, analytiques et algébriques

2.1. Séries formelles, analytiques, algébriques. Dans ce paragraphe liminaire et élémentaire, destiné seulement à fixer fermement nos notations et à présenter le théorème d'approximation de M. Artin, la lettre $\mathbb{K}$ désigne ou bien le corps $\mathbb{R}$ des nombres réels, ou bien le corps $\mathbb{C}$ des nombres complexes. Soit $n \in \mathbb{N}$ et $\mathsf{x} := (\mathsf{x}_1, \ldots, \mathsf{x}_n) \in \mathbb{K}^n$ des indéterminées. Soit $\mathbb{K}[\![\mathsf{x}]\!]$ l'anneau local des séries formelles en les variables $(\mathsf{x}_1, \ldots, \mathsf{x}_n)$. Par définition, un élément $\varphi(\mathsf{x}) \in \mathbb{K}[\![\mathsf{x}]\!]$ s'écrit sous la forme $\varphi(\mathsf{x}) = \sum_{\alpha\in\mathbb{N}^n} \varphi_\alpha\, \mathsf{x}^\alpha$, où x^α est le monôme $\mathsf{x}_1^{\alpha_1}\mathsf{x}_2^{\alpha_2}\cdots\mathsf{x}_n^{\alpha_n}$ et où les coefficients φ_α, du reste arbitraires, appartiennent à $\mathbb{K}$ pour tout multiindice $\alpha := (\alpha_1, \ldots, \alpha_n) \in \mathbb{N}^n$. Une telle série est *identiquement nulle* si tous ses coefficients φ_α sont

nuls. Nous écrirons cette propriété $\varphi(\mathsf{x}) \equiv 0$ (dans $\mathbb{K}[\![\mathsf{x}]\!]$). Cette relation, bien que triviale, sera fréquemment utilisée dans ce mémoire. Lorsque $\mathbb{K} = \mathbb{C}$, la variable x et les coefficients φ_α sont complexes et on définit $\overline{\varphi}(\mathsf{x}) := \sum_{\alpha\in\mathbb{N}^n} \overline{\varphi}_\alpha\, \mathsf{x}^\alpha$ en ne conjuguant que les coefficients de la série, de telle sorte que l'on a $\overline{\varphi(\mathsf{x})} \equiv \overline{\varphi}(\overline{\mathsf{x}})$, la barre de conjugaison se distribuant sur la série et sur la variable.

La *longueur* du multiindice α est l'entier $|\alpha| := \alpha_1 + \cdots + \alpha_n$. La dérivée partielle correspondante sera notée $\partial^\alpha_{\mathsf{x}} := \partial^{\alpha_1}_{\mathsf{x}_1}\partial^{\alpha_2}_{\mathsf{x}_2}\cdots\partial^{\alpha_n}_{\mathsf{x}_n}$ et parfois $\partial^{|\alpha|}\varphi(\mathsf{x})/\partial\mathsf{x}_1^{\alpha_1}\partial\mathsf{x}_2^{\alpha_2}\cdots\partial\mathsf{x}_n^{\alpha_n}$. Évidemment, on a $\varphi_\alpha = [1/\alpha!]\,\partial^\alpha_{\mathsf{x}}\varphi(\mathsf{x})|_{\mathsf{x}=0}$, où le symbole $\alpha! := \alpha_1!\alpha_2!\cdots\alpha_n!$ est le produit des factorielles des α_j.

Sur $\mathbb{K}^n$, la norme $|\mathsf{x}| := \max\{|\mathsf{x}_1|, |\mathsf{x}_2|, \ldots, |\mathsf{x}_n|\}$ sera la plus commode. Si les coefficients satisfont une estimée de Cauchy de la forme $|\varphi_\alpha| \leq C\rho^{-|\alpha|}$, où $C > 0$ et $\rho > 0$, on dira que la série formelle $\varphi(\mathsf{x})$ *converge normalement* dans le *cube ouvert* $\square_n(\rho) := \{\mathsf{x} \in \mathbb{K}^n : |x| < \rho\}$. Bien entendu, sous cette condition, une valeur numérique $\varphi(\mathsf{x}) \in \mathbb{K}$ peut être assignée univoquement à φ en tout point $\mathsf{x} \in \square_n(\rho)$. On dira que φ est $\mathbb{K}$-*analytique* et on écrira $\varphi \in \mathbb{K}\{\mathsf{x}\}$, les constantes ρ et C étant de peu d'importance pour les problèmes que nous étudierons. Si de plus il existe un polynôme *non nul* $P(\mathsf{X}_1, \ldots, \mathsf{X}_n, \Phi) \in \mathbb{K}[\mathsf{X}_1, \ldots, \mathsf{X}_n, \Phi]\backslash\{0\}$ tel que $P(\mathsf{x}_1, \ldots, \mathsf{x}_n, \varphi(\mathsf{x}_1, \ldots, \mathsf{x}_n)) \equiv 0$, on dira que φ est $\mathbb{K}$-*algébrique* (au sens de J. Nash) et on écrira $\varphi(\mathsf{x}) \in \mathscr{A}_{\mathbb{K}}\{\mathsf{x}\}$. Évidemment, on a les deux inclusions strictes

$$\mathbb{K}[\![\mathsf{x}]\!] \supset \mathbb{K}\{\mathsf{x}\} \supset \mathscr{A}_{\mathbb{K}}\{\mathsf{x}\}. \tag{2.2}$$

Ces trois ensembles $\mathbb{K}[\![\mathsf{x}]\!]$, $\mathbb{K}\{\mathsf{x}\}$ et $\mathscr{A}_{\mathbb{K}}\{\mathsf{x}\}$ sont des anneaux dits de *séries entières* qui sont locaux, nothériens, factoriels et qui satisfont les théorèmes de préparation et de division de K. Weierstrass. Ils sont stables par composition et par différentiation ; le théorème des fonctions implicites y est valide.

2.3. Application formelles. Soient n et n' deux entiers strictement positifs. Une *application formelle de* $\mathbb{K}^n$ *dans* $\mathbb{K}^{n'}$ consiste en la donnée d'un n'-uplet de séries entières formelles $\varphi(\mathsf{x}) := (\varphi_1(\mathsf{x}), \ldots, \varphi_{n'}(\mathsf{x}))$ appartenant à $\mathbb{K}[\![\mathsf{x}]\!]$ et sans terme constant, *i.e.* satisfaisant $\varphi_{i'}(0) = 0$. Une telle application est dite

- **(1)** *inversible* si $n' = n$ et si $\det\left([\partial\varphi_{i_1}/\partial\mathsf{x}_{i_2}](0)\right)_{1\leq i_1,\, i_2\leq n} \neq 0$;
- **(2)** *submersive* si $n' \leq n$ et s'il existe des entiers $1 \leq i(1) < \cdots < i(n') \leq n$ tels que $\det\left([\partial\varphi_{i'_1}/\partial\mathsf{x}_{i(i'_2)}](0)\right)_{1\leq i'_1,\, i'_2\leq n'} \neq 0$;
- **(3)** *finie* si l'idéal engendré par les composantes $\varphi_1(\mathsf{x}), \ldots, \varphi_{n'}(\mathsf{x})$ est de codimension finie dans $\mathbb{K}[\![\mathsf{x}]\!]$, ce qui implique que $n' \geq n$;
- **(4)** *dominante* si $n' \leq n$ et s'il existe des entiers $1 \leq i(1) < \cdots < i(n') \leq n$ tels que le déterminant $\det([\partial\varphi_{i'_1}/\partial\mathsf{x}_{i(i'_2)}](\mathsf{x}))_{1\leq i'_1,\, i'_2\leq n'} \not\equiv 0$ ne s'annule pas identiquement dans $\mathbb{K}[\![\mathsf{x}]\!]$;

(5) *transversale* s'il n'existe pas de série formelle $F'(\mathsf{x}'_1, \ldots, \mathsf{x}'_{n'}) \in \mathbb{C}[\![\mathsf{x}'_1, \ldots, \mathsf{x}'_{n'}]\!]$ non nulle telle que $F'(\varphi_1(\mathsf{x}), \ldots, \varphi_{n'}(\mathsf{x})) \equiv 0$ dans $\mathbb{K}[\![\mathsf{x}]\!]$.

On démontre de manière élémentaire que ces conditions sont ordonnées par ordre croissant de généralité (*voir* [Me2003]). La dernière condition, de loin la plus générale, n'implique aucune inégalité entre les dimensions n et n'.

2.4. Approximation. Le principal outil (non trivial) de géométrie analytique que nous utiliserons *ad nauseam* énonce que la série de Taylor de toute solution purement formelle d'équations $\mathbb{K}$-analytiques peut être corrigée à l'infini de manière à la rendre convergente, de telle sorte que la série modifiée demeure solution des équations analytiques données.

Théorème 2.5. (M. Artin : [Ar1968], [Ar1969]) Soit $n \in \mathbb{N}$ avec $n \geq 1$, soit $\mathsf{x} = (\mathsf{x}_1, \ldots, \mathsf{x}_n) \in \mathbb{K}^n$, soit $m \in \mathbb{N}$, avec $m \geq 1$, soit $\mathsf{y} = (\mathsf{y}_1, \ldots, \mathsf{y}_m) \in \mathbb{K}^n$, soit $d \in \mathbb{N}$ avec $d \geq 1$ et soit $R_1(\mathsf{x}, \mathsf{y}), \ldots, R_d(\mathsf{x}, \mathsf{y})$ une collection arbitraire de séries entières appartenant à $\mathbb{K}\{\mathsf{x}, \mathsf{y}\}$ ou à $\mathscr{A}_{\mathbb{K}}\{\mathsf{x}, \mathsf{y}\}$ qui s'annulent à l'origine, c'est-à-dire $R_j(0, 0) = 0$ pour $j = 1, \ldots, d$. Supposons qu'il existe une application formelle $h(\mathsf{x}) = (h_1(\mathsf{x}), \ldots, h_m(\mathsf{x})) \in \mathbb{K}[\![\mathsf{x}]\!]^m$ avec $h(0) = 0$ telle que

$$R_j(\mathsf{x}, h(\mathsf{x})) \equiv 0 \ \text{ dans } \ \mathbb{K}[\![\mathsf{x}]\!], \quad \text{pour } \ j = 1, \ldots, d. \tag{2.6}$$

Soit $\mathfrak{m}(\mathsf{x}) := \mathsf{x}_1\mathbb{K}[\![\mathsf{x}]\!] + \cdots + \mathsf{x}_n\mathbb{K}[\![\mathsf{x}]\!]$ l'idéal maximal de $\mathbb{K}[\![\mathsf{x}]\!]$. Pour tout entier $N \geq 1$, il existe une série entière convergente $h^N(\mathsf{x})$ qui appartient à $\mathbb{K}\{\mathsf{x}\}^m$ ou à $\mathscr{A}_{\mathbb{K}}\{\mathsf{x}\}^m$ telle que

$$R_j\left(\mathsf{x}, h^N(\mathsf{x})\right) \equiv 0 \ \text{ dans } \ \mathbb{K}[\![\mathsf{x}]\!], \quad \text{pour } \ j = 1, \ldots, d, \tag{2.7}$$

et qui approxime $h(\mathsf{x})$ à l'ordre $N - 1$, c'est-à-dire qui satisfait

$$h^N(\mathsf{x}) \equiv h(\mathsf{x}) \ \bmod \left(\mathfrak{m}(x)^N\right). \tag{2.8}$$

Dans la démonstration du théorème principal 1.23, nous verrons très fréquemment apparaître des solutions formelles d'un nombre infini d'équations analytiques qu'il faudra transformer en solutions convergentes. Heureusement, la considération d'un nombre fini d'équations analytiques $R_j(\mathsf{x}, \mathsf{y}) = 0$, $j = 1, \ldots, d$ dans le théorème de M. Artin n'est en rien restrictive. En effet, s'il l'on se donne au contraire un nombre infini de telles équations $R_j(\mathsf{x}, \mathsf{y}) = 0$, pour $j = 1, 2, 3, \ldots, \infty$, grâce à la noethérianité de $\mathbb{K}\{\mathsf{x}, \mathsf{y}\}$ ou de $\mathscr{A}_{\mathbb{K}}\{\mathsf{x}, \mathsf{y}\}$, il existe un entier $d \geq 1$ tel que l'idéal engendré par tous les R_j coïncide avec l'idéal engendré par $R_1, R_2, \ldots, R_d$. En d'autres termes, pour tout entier $l = 1, 2, \ldots, \infty$ et tout $j = 1, \ldots, d$, il existe des coefficients $\lambda_{l,j}(\mathsf{x}, \mathsf{y})$ appartenant à $\mathbb{K}\{\mathsf{x}, \mathsf{y}\}$ ou à $\mathscr{A}_{\mathbb{K}}(\mathsf{x}, \mathsf{y})$ tels que $R_l(\mathsf{x}, \mathsf{y}) \equiv \sum_{j=1}^{d} \lambda_{l,j}(\mathsf{x}, \mathsf{y})\, R_j(\mathsf{x}, \mathsf{y})$. On déduit immédiatement que les équations finies $R_1(\mathsf{x}, h(\mathsf{x})) \equiv \cdots \equiv R_d(\mathsf{x}, h(\mathsf{x})) \equiv 0$ sont satisfaites si et seulement si les équations infinies $R_l(\mathsf{x}, h(\mathsf{x})) \equiv 0$ pour $l = 1, 2, \ldots, \infty$ le sont ; on déduit de même qu'une solution

convergente $h^N(\mathsf{x}) \in \mathbb{K}\{\mathsf{x}\}$ ou $h^N(\mathsf{x}) \in \mathscr{A}_{\mathbb{K}}\{\mathsf{x}\}$ des équations finies $R_1\left(\mathsf{x},\, h^N(\mathsf{x})\right) \equiv \cdots \equiv R_d\left(\mathsf{x},\, h^N(\mathsf{x})\right) \equiv 0$ est automatiquement une solution des équations infinies $R_l\left(\mathsf{x},\, h^N(\mathsf{x})\right) \equiv 0$, $l = 1, 2, \ldots, \infty$. En définitive, le Théorème 2.5 est tout aussi valide pour un nombre infini d'équations analytiques.

Notons qu'il n'est pas possible d'appliquer directement le Théorème 2.5 pour démontrer le Corollaire 1.45 ou le corollaire plus général du Théorème 1.23 cité avant l'énoncée du Corollaire 1.46. En effet, sous les hypothèses dudit théorème, l'application CR formelle complexifiée $h^c : (\mathscr{M}, 0) \longrightarrow_{\mathscr{F}} (\mathscr{M}', 0)$ satisfait les d' équations analytiques complexes de la première ligne de (1.27), dont les variables sont $\mathsf{x} := (\zeta, t) \in \mathbb{C}^{m+n}$. En appliquant le Théorème 2.5, on trouve pour tout N une application $(H^N(\zeta, t), \Phi^N(\zeta, t)) \in \mathbb{C}\{\zeta, t\}^{2n}$ approximant h^c jusqu'à l'ordre $(N-1)$ et satisfaisant les mêmes équations analytiques. Malheureusement, rien ne permet de s'assurer que la variable ζ n'apparaît pas dans H^N et plus encore, que $\Phi^N = \overline{H}^N$. Toutes les différentiations que nous effectuerons dans les Sections 5, 6 et 7 auront pour véritable but de séparer les variables t de leurs conjuguées complexifiées τ.

Énonçons maintenant un corollaire direct (et connu) du Théorème 2.5 qui fournit un critère puissant pour la convergence d'applications formelles et rappelons-en une démonstration, élémentaire parmi d'autres.

Corollary 2.9. *Sous les hypothèses du Théorème 2.5, si $d = m$ et si le déterminant*

$$\det\left(\frac{\partial R_j}{\partial \mathsf{y}_k}(\mathsf{x},\, h(\mathsf{x}))\right)_{1\leq j,\, k\leq m} \tag{2.10}$$

ne s'annule pas identiquement dans $\mathbb{K}[\![\mathsf{x}]\!]$, la série formelle $h(\mathsf{x})$ est en fait convergente analytique ou algébrique, i.e. appartient à $\mathbb{K}\{\mathsf{x}\}^m$ ou à $\mathscr{A}_{\mathbb{K}}\{\mathsf{x}\}^m$.

Proof. Grâce à la formule de Taylor sous forme intégrale, on trouve aisément des séries entières $S_{j,\,k}(\mathsf{x},\, \mathsf{y},\, \mathsf{y}')$ analytiques ou algébriques satisfaisant les formules de division

$$R_j\,(\mathsf{x},\, \mathsf{y}) - R_j\,(\mathsf{x},\, \mathsf{y}') \equiv \sum_{k=1}^{m} S_{j,k}\,(\mathsf{x},\, \mathsf{y},\, \mathsf{y}')\;[\mathsf{y}_k - \mathsf{y}'_k]\,, \tag{2.11}$$

pour $j = 1, \ldots, d$. Notons qu'en faisant tendre y'_k vers y_k, il est clair qu'on obtient

$$S_{j,\,k}(\mathsf{x},\, \mathsf{y},\, \mathsf{y}) \equiv [\partial R_j/\partial y_k](\mathsf{x},\, \mathsf{y}). \tag{2.12}$$

Grâce au Théorème d'approximation 2.5, on trouve pour tout entier $N \geq 1$ des séries entières convergentes analytiques ou algébriques $h^N(\mathsf{x})$ qui sont solutions des équations $R_j\left(\mathsf{x},\, h^N(\mathsf{x})\right) \equiv 0$, pour $j = 1, \ldots, m$, et qui satisfont $h^N(\mathsf{x}) \equiv h(\mathsf{x}) \mod \left(\mathfrak{m}(\mathsf{x})^N\right)$.

Remplaçons maintenant y par $h(\mathsf{x})$ et y' par $h^N(\mathsf{x})$ dans les équations (2.11), ce qui donne

$$\text{(2.13)} \qquad \begin{cases} 0 \equiv R_j\left(\mathsf{x},\, h(\mathsf{x})\right) - R_j\left(\mathsf{x},\, h^N(\mathsf{x})\right) \\ \quad \equiv \displaystyle\sum_{k=1}^{m} S_{j,k}\left(\mathsf{x},\, h(\mathsf{x}),\, h^N(\mathsf{x})\right)\, [h_k(\mathsf{x}) - h_k^N(\mathsf{x})], \end{cases}$$

pour $j = 1, \ldots, m$. En tenant compte de l'identité (2.12), l'hypothèse que le déterminant (2.10) ne s'annule pas identiquement s'écrit de manière équivalente

$$\text{(2.14)} \qquad \det\left(S_{j,k}\left(\mathsf{x},\, h(\mathsf{x}),\, h(\mathsf{x})\right)\right)_{1\leq j,\, k\leq m} \not\equiv 0 \ \text{ dans } \mathbb{K}[\![\mathsf{x}]\!].$$

Il en découle aisément que si N est suffisamment grand, le déterminant

$$\text{(2.15)} \qquad \det\left(S_{j,\,k}\left(\mathsf{x},\, h(\mathsf{x}),\, h^N(\mathsf{x})\right)\right)_{1\leq j,\, k\leq m}$$

ne s'annule (lui non plus) pas identiquement dans $\mathbb{K}[\![\mathsf{x}]\!]$. Finalement, en interprétant (2.13) comme un système linéaire homogène dont les inconnues sont les $h_k(\mathsf{x}) - h_k^N(\mathsf{x})$, pour $k = 1, \ldots, m$, la non-annulation du déterminant (2.15) implique immédiatement que $h_k(\mathsf{x}) \equiv h_k^N(\mathsf{x})$ pour $k = 1, \ldots, m$. En conclusion, l'application formelle $h(\mathsf{x}) \equiv h^N(\mathsf{x})$, qui s'identifie donc à l'une des applications *convergentes* qui sont fournies par l'approximation de M. Artin pour N assez grand, est effectivement convergente, analytique ou algébrique. $\square$

2.16. Équivalences CR formelles non convergentes entre sous-variétés holomorphiquement dégénérées. Dans ce paragraphe, nous vérifions l'assertion faite au §1.10 de l'Introduction. Soit donc $(s',\, t') \longmapsto \exp(s'X')(t') =: \varphi'(s',\, t')$ le flot local d'un champ de vecteurs holomorphe $X' = \sum_{i'=1}^{n'} a'_{i'}(t')\, \frac{\partial}{\partial t'_{i'}}$ non nul tangent à une sous-variété M' de $\mathbb{C}^{n'}$ analytique réelle, générique et passant par l'origine. Par définition, cette application holomorphe définie au voisinage de $(0,\, 0)$ dans $\mathbb{C}\times\mathbb{C}^{n'}$ est uniquement déterminée par la condition initiale $\varphi'(0,\, t') \equiv t'$ et par le système d'équations différentielles ordinaires $\partial_{s'}\, \varphi'_{i'}(s',\, t') \equiv a'_{i'}(\varphi'(s',\, t'))$, pour $i' = 1,\, \ldots,\, n'$.

Supposons M' représentée par les équations analytiques réelles $\rho'_{j'}\left(t',\, \bar{t}'\right) = 0$, pour $j' = 1,\, \ldots,\, d'$. La condition de tangence de X' à M' implique évidemment que le flot de X' stabilise M', c'est-à-dire qu'il existe une matrice inversible de taille $d' \times d'$ de séries entières convergentes $c'(s',\, t',\, \bar{s}',\, \bar{t}')$ telle que l'on a l'identité vectorielle

$$\text{(2.17)} \qquad \rho'\left(\varphi'(s',\, t'),\, \overline{\varphi}'(\bar{s}',\, \bar{t}')\right) \equiv c'\left(s',\, t',\, \bar{s}',\, \bar{t}'\right)\, \rho'\left(t',\, \bar{t}'\right).$$

De plus, comme X' ne s'annule pas identiquement, après une renumérotation éventuelle, on peut supposer que $a'_1(t') \not\equiv 0$. Il en découle que $\partial_{s'}\, \varphi'_1(0,\, t') \equiv a'_1\left(\varphi'(0,\, t')\right) \not\equiv 0$ dans $\mathbb{C}\{t'\}$. Autrement dit, dans le développement en série entière de $\partial_{s'}\, \varphi'_1(s',\, t')$ par rapport aux puissances de s', qui s'écrit $\sum_{k=0}^{\infty} (s')^k\, \varphi'_{1,\,k}(t')$, on a $\varphi'_{1,\,0}(t') \not\equiv 0$. On vérifie

alors facilement que pour toute série formelle $\varpi'(t') \in \mathbb{C}[\![t']\!]$ dont l'ordre d'annulation est suffisamment élevé, *i.e.* $\varpi'(t') \in [\mathfrak{m}(t')]^N$ pour N assez grand, la composition $\partial_{s'}\varphi'_1(\varpi'(t'),\, t')$ ne s'annule pas identiquement dans $\mathbb{C}[\![t']\!]$. Le lemme suivant achève d'établir l'énoncé désiré.

Lemme 2.18. Pour toute série entière $\varpi'(t') \in \mathbb{C}[\![t']\!]$ non convergente qui satisfait $\partial_{s'}\varphi'_1\,(\varpi'(t'),\, t') \not\equiv 0$, l'application $t' \mapsto_{\mathscr{F}} \varphi'\,(\varpi'(t'),\, t')$ induit une auto-application CR formelle de M' qui n'est pas convergente.

Proof. En effet, si l'on remplace s' par $\varpi'(t')$ dans (2.17), on voit immédiatement que $t' \longmapsto_{\mathscr{F}} \varphi'(\varpi'(t'),\, t')$ induit une auto-application CR formelle de M'.

Supposons par l'absurde qu'elle est convergente. En particulier, sa première composante $\varphi'_1(\varpi'(t'),\, t')$ s'identifie à une série convergente. Notons-la $\alpha'_1(t') \in \mathbb{C}\{t'\}$ et considérons l'identité formelle

$$\varphi'\,(\varpi'(t'),\, t') - \alpha'_1(t') \equiv 0, \tag{2.19}$$

qui exprime que $\varpi'(t')$ est solution d'équations analytiques. Puisque l'on suppose que $\partial_{s'}\varphi'_1\,(\varpi'(t'),\, t') \not\equiv 0$, l'hypothèse principale du Corollaire 2.9 est exactement satisfaite, ce qui implique que $\varpi'(t')$ est convergente. Cette contradiction conclut le raisonnement par l'absurde. En conclusion, l'auto-application CR formelle $t' \mapsto_{\mathscr{F}} \varphi'\,(\varpi'(t'),\, t')$ n'est pas convergente. $\square$

2.20. Démonstrations du Corollaire 1.46 et du Théorème 1.11. D'après le Théorème 1.23, toutes les composantes $\Theta'_{j',\gamma'}(h(t))$ s'identifient à des séries entières convergentes $\theta'_{j',\gamma'}(t) \in \mathbb{C}\{t\}$, pour $j' = 1,\, \ldots,\, d'$ et $\gamma' \in \mathbb{N}^{m'}$. Considérons les équations analytiques suivantes, en nombre infini :

$$\Theta'_{j',\gamma'}(h(t)) - \theta'_{j',\gamma'}(t) \equiv 0\,; \tag{2.21}$$

elles sont satisfaites par l'application formelle $h(t)$. Les hypothèses du Corollaire 1.46 sont exactement celles qui assurent que le Corollaire 2.9 s'applique. Donc $h(t) \in \mathbb{C}\{t\}^{n'}$ converge. Le Corollaire 1.46 est démontré.

Pour établir le Théorème 1.11, rappelons que M' est holomorphiquement non-dégénérée si et seulement si il existe des entiers $j'(1),\, \ldots,\, j'(n')$ tels que $1 \leq j'(i'_1) \leq d'$ pour $i'_1 = 1,\, \ldots,\, n'$ et des multiindices distincts $\gamma'(1),\, \ldots,\, \gamma'(n') \in \mathbb{N}^{m'}$ tels le déterminant suivant :

$$\det\left(\frac{\partial\Theta'_{j'(i'_1),\,\gamma'(i'_1)}}{\partial t'_{i'_2}}(t')\right)_{1\leq i'_1,\, i'_2\leq n'} \tag{2.22}$$

ne s'annule pas identiquement dans $\mathbb{C}[\![t']\!]$ (*cf.* [St1996], [BER1999a] ou le Lemme 3.2.49 **(5)** dans [Me2003]). Si $h(t)$ est inversible à l'origine elle est à la fois CR-transversale et transversale à l'origine. Le Théorème 1.23 s'applique : les composantes $\Theta'_{j',\gamma'}(h(t))$ s'identifient à des séries entières convergentes $\theta'_{j',\gamma'}(t) \in \mathbb{C}\{t\}$, pour $j' = 1,\, \ldots,\, d'$ et $\gamma' \in \mathbb{N}^{m'}$.

Puisque h est transversale à l'origine, le déterminant (1.47) pour les mêmes entiers $j'(i'_1)$ et les mêmes multiindices $\gamma'(i'_1)$ ne peut pas s'annuler identiquement. L'hypothèse principale du Corollaire 1.46 est satisfaite, donc $h(t) \in \mathbb{C}\{t\}^{n'}$ converge. Nous en déduisons même que le Théorème 1.11 est vrai avec l'hypothèse plus générale que h est CR-transversale et transversale à l'origine, ou avec d'autres hypothèses intermédiaires.

§3. Géométrie locale des paires de feuilletages minimales

3.1. Avertissement. Nos considérations seront toujours locales, centrées en un point fixe de $\mathbb{C}^n$ que l'on supposera être l'origine, sans perte de généralité. Nous éviterons soigneusement d'employer le langage des germes, dont l'ambiguïté fondamentale qui consiste à ne pas préciser dans quels petits ouverts on travaille, loin de simplifier les énoncés et les démonstrations, entretient des imprécisions qui nuisent à la cohérence de l'ensemble et occultent le sens géométrique concret des concepts, localisés au fur et à mesure des preuves[3].

Dans cette section et dans celle qui suit, nous présentons les notions de base. Elles sont développées en partie dans d'autres références, mais elles y sont généralement exposées dans un autre langage ou d'une manière parfois incomplète que nous jugeons trop peu conceptuelle ou insuffisamment épurée. Après une présentation progressive et générale des deux objets fondamentaux que sont la paire de feuilletages invariants (Section 3) et les jets des sous-variétés de Segre (Section 4), les objets analytiques avec lesquels nous travaillerons réellement seront clairement et concrètement posés dans les deux résumés qui apparaissent aux sous-sections 3.31 et 4.33.

Bien que les concepts de base possèdent tous un sens géométrique initial, en vérité, ce qui constituera pour nous l'essence même du Théorème principal 1.23, c'est l'architecture purement algébrique des calculs formels qui apparaîtront dans sa démonstration développée ; c'est l'enchaînement structuré, réglé et épuré des gestes formels ; et surtout, c'est la *nature duelle des calculs*, toujours absolument symétriques par conjugaison complexe. C'est pourquoi nous exprimerons nos calculs en déployant leurs deux versions parallèles d'une manière simultanée. Enfin, c'est grâce à cette compréhension interne de la symétrie entre les variables holomorphes et les variables

[3]Par exemple, le fait de travailler avec des polydisques emboîtés dont les rayons décroissants sont précisés successivement en fonction de contraintes explicites est un ingrédient substantiel pour démontrer de manière rigoureuse et complète que l'ensemble des automorphismes holomorphes locaux d'une sous-variété locale de $\mathbb{C}^n$ analytique réelle, générique et finiment non-dégénérée est un *groupe de Lie local de dimension finie*, notion qui ne s'accommode guère du langage des germes si l'on tient à la relier concrètement à l'objet géométrique qui est stabilisé (*voir* le Théorème 4.1 dans [GM2004] ; le théorème le plus général dans cette direction obtenu auparavant par les auteurs de [Za1997] et [BER1999a] se limite, sans nécessité apparente, au sous-groupe d'isotropie d'un point fixe donné à l'avance).

anti-holomorphes que nous serons à même de transférer presque directement un large pan de la géométrie CR à l'étude des systèmes complètement intégrables d'équations aux dérivées partielles analytiques (*voir* [Me2004]).

Ainsi, dans ce mémoire, sera privilégiée la concrétude explicite des calculs par rapport à leur possible abstraction structurale.

3.2. Sous-variétés génériques analytiques réelles de $\mathbb{C}^n$. Une sous-variété analytique réelle locale M de $\mathbb{C}^n$ passant par l'origine est dite *générique* si son espace tangent *génère* $\mathbb{C}^n$, c'est-à-dire $T_0M + JT_0M = T_0\mathbb{C}^n$, où J désigne la structure complexe standard de $\mathbb{C}^n$. Il en découle trivialement que la codimension réelle d de M satisfait $d \leq n$. Si $t = (t_1, \dots, t_n) \in \mathbb{C}^n$ sont des coordonnées centrées à l'origine, on peut représenter concrètement M par d équations cartésiennes indépendantes $\rho_1(t, \bar{t}) = 0, \dots, \rho_d(t, \bar{t}) = 0$, où les séries entières convergentes $\rho_j(t, \bar{t}) \in \mathbb{C}\{t, \bar{t}\}$ s'annulent à l'origine et satisfont la condition de réalité $\rho_j(t, \bar{t}) \equiv \overline{\rho}_j(\bar{t}, t)$. L'hypothèse que M est une sous-variété (sans singularités) de $\mathbb{C}^n$ équivaut au fait que la matrice $\left(\frac{\partial \rho_j}{\partial t_{k_1}}(t, \bar{t}) \;\; \frac{\partial \rho_j}{\partial \bar{t}_{k_1}}(t, \bar{t})\right)_{1 \leq j \leq d}^{1 \leq k_1, k_2 \leq n}$ à d lignes et à $2n$ colonnes est de rang d à l'origine. En exprimant analytiquement la condition géométrique $T_0M + JT_0M = T_0\mathbb{C}^n$, on voit aussi que la généricité de M équivaut au fait que la matrice $\left(\frac{\partial \rho_j}{\partial t_k}(t, \bar{t})\right)_{1 \leq j \leq d}^{1 \leq k \leq n}$ de taille $d \times n$ est de rang d à l'origine. On vérifie que cette dernière condition est indépendante du choix des équations définissantes et qu'elle est alors satisfaite en tout point $p \in M$ suffisamment proche de l'origine : la généricité est une condition ouverte. Sans perte de généralité, on pourra donc supposer qu'elle est satisfaite en tout point de M.

Les sous-variétés analytiques réelles dites *Cauchy-Riemann* (CR) de $\mathbb{C}^n$ les plus générales ne sont pas forcément génériques, néanmoins, il est bien connu qu'elles sont génériques dans leur complexification intrinsèque, qui est une sous-variété complexe localement biholomorphe à $\mathbb{C}^{n'}$ pour un entier $n' \leq n$; par conséquent, ne travailler qu'avec des sous-variétés génériques n'est en rien restrictif.

Grâce à la formule de la dimension pour la somme de deux sous-espaces vectoriels $\dim_{\mathbb{R}}(E + F) = \dim_{\mathbb{R}} E + \dim_{\mathbb{R}} F - \dim_{\mathbb{R}}(E \cap F)$, on déduit que la distribution de sous-espaces linéaires réels $M \ni p \mapsto T_pM \cap JT_pM$ est de rang constant $2(n - d)$. Le sous-espace $T_pM \cap JT_pM$ est appelé sous-espace complexe tangent à M et noté T_p^cM. Puisque $J^2 = -\mathrm{Id}$, c'est l'unique sous-espace J-invariant de T_pM de dimension maximale. L'entier $m := n - d$ est appelé la *dimension CR* de M.

Seuls deux cas limites sont inintéressants du point de vue de la géométrie CR locale : lorsque la codimension d s'annule, auquel cas M s'identifie à un cube ouvert de $\mathbb{C}^n$, et lorsque la dimension CR m s'annule, auquel cas M s'identifie à un cube ouvert de $\mathbb{R}^n$. Par conséquent, *dans tout le mémoire nous travaillerons avec des sous-variétés génériques locales de codimension et de dimension CR strictement positives*.

Après une transformation linéaire inversible de $\mathbb{C}^n$ arbitrairement proche de l'identité, on peut supposer que dans les coordonnées t scindées en deux groupes $t = (z,\, w) = (z_1,\, \ldots,\, z_m,\, w_1,\, \ldots,\, w_d) = (x{+}iy,\, u{+}iv) \in \mathbb{C}^m \times \mathbb{C}^d$, l'espace tangent T_0M ne contient aucun vecteur réel de l'espace des v ; de manière équivalente, on a : $T_0M + \big(\{0\} \times \mathbb{R}^d_v\big) = T_0\mathbb{C}^n$. Puisque la sous-variété M est alors graphée au-dessus de $\mathbb{C}^m_z \times \mathbb{R}^d_u$, on peut la représenter par d équations de la forme $v_j = \varphi_j(x,\, y,\, u)$, $j = 1, \ldots,\, d$, où les séries analytiques réelles $\varphi_j(x,\, y,\, u) \in \mathbb{R}\{x,\, y,\, u\}$ satisfont bien sûr $\varphi_j(0) = 0$.

De notre point de vue, toute représentation de M par des équations définissantes réelles possède le défaut majeur de ne pas différencier clairement les variables t et $\bar{t}$. C'est pourquoi nous utiliserons toujours d'autres équations définissantes, dites *équations complexes*.

Remplaçons x par $(z + \bar{z})/2$, y par $(z - \bar{z})/2i$, u par $(w + \bar{w})/2$ et v par $(w - \bar{w})/2i$ dans ces équations, ce qui donne $w_j - \bar{w}_j = 2i\,\varphi_j\left((z+\bar{z})/2,\, (z-\bar{z})/2i,\, (w+\bar{w})/2\right)$. La matrice des dérivées partielles de ces d équations scalaires par rapport aux variables w_l, calculée à l'origine, vaut : $I_{d\times d} - 2i\left(\frac{1}{2}\frac{\partial\varphi_j}{\partial u_l}(0,\, 0,\, 0)\right)_{1\le j\le d}^{1\le l\le d}$; elle est non nulle, puisque sa partie réelle ne s'annule pas. Par conséquent, le théorème des fonctions implicites (version analytique complexe) s'applique et il permet de résoudre w en fonction des variables z, $\bar{z}$ et $\bar{w}$. Notons les d équations complexes obtenues sous la forme $w_j = \overline{\Theta}_j(z,\, \bar{z},\, \bar{w})$, $j = 1, \ldots,\, d$, où les $\overline{\Theta}_j(z,\, \bar{z},\, \bar{w}) \in \mathbb{C}\{z,\, \bar{z},\, \bar{w}\}$ sont les uniques solutions des identités analytiques[4]

$$\frac{\overline{\Theta}_j(z,\, \bar{z},\, \bar{w}) - \bar{w}_j}{2i} \equiv \varphi_j\left(\frac{z+\bar{z}}{2},\, \frac{z-\bar{z}}{2i},\, \frac{\overline{\Theta}(z,\, \bar{z},\, \bar{w}) + \bar{w}}{2}\right). \tag{3.3}$$

On vérifie que de telles équations complexes existent avec l'hypothèse (un peu plus générale) $T_0M + (\{0\} \times \mathbb{C}^n_w) = T_0\mathbb{C}^n$. Un problème de cohérence surgit alors immédiatement : les séries entières $\overline{\Theta}_j$ étant à valeurs complexes, les parties réelles et imaginaires des équations $w_j = \overline{\Theta}_j(z,\, \bar{z},\, \bar{w})$ fournissent en vérité $2d$ équations réelles. De manière équivalente, il faudrait leur ajouter les équations conjuguées $\bar{w}_j = \Theta_j(\bar{z}, z, w)$, $j = 1, \ldots,\, d$, ce qui semble contredire le fait que M est de codimension d. Autre ambiguïté : on aurait pu choisir de résoudre par rapport à $\bar{w}$ plutôt que par rapport à w.

Heureusement, on démontre (*cf.* [BER1999a] ou [Me2003]) qu'il existe une matrice inversible $(\overline{a}_{i,j}\,(\bar{t},\, t))_{1\le i\le d}^{1\le j\le d}$ de séries formelles convergentes, de taille $d \times d$, égale à $-\mathrm{Id}_{d\times d}$ à l'origine, telle qu'on a l'identité formelle vectorielle

$$\bar{w} - \Theta(\bar{z},\, z,\, w) \equiv \overline{a}(\bar{t},\, t)\ \big[w - \overline{\Theta}(z,\, \bar{z},\, \bar{w})\big] \tag{3.4}$$

[4]Nous notons ici ces solutions $\overline{\Theta}_j$, en les équipant d'emblée d'une barre de conjugaison complexe, avec l'idée que dans leurs $2m + d$ arguments $(z,\, \bar{z},\, \bar{w})$, ceux qui sont des conjugués de variables complexes dominent. Dans la suite, nous verrons à quel point le jeu alternatif entre les séries entières $\overline{\Theta}_j(z, \bar{z}, \bar{w})$ et leurs conjuguées $\Theta_j(\bar{z},\, z,\, w)$ est crucial.

dans $\mathbb{C}\{t,\, \bar{t}\}^d$. Réciproquement, on vérifie que pour toute série entière vectorielle analytique $\Theta(\bar{z},\, z,\, w) \in \mathbb{C}\{\bar{z},\, z,\, w\}^d$ satisfaisant une telle équation, le sous-ensemble $M := \{(z,\, w) \in \mathbb{C}^n :\, w = \overline{\Theta}(z,\, \bar{z},\, \bar{w})\}$ est une sous-variété locale de $\mathbb{C}^n$ analytique *réelle*, générique et de codimension d.

Il découle aussi visiblement de (3.4) qu'on n'obtiendrait aucune équation indépendante nouvelle pour la représentation de M par les équations $w_j = \overline{\Theta}_j(z,\, \bar{z},\, \bar{w})$ en leur ajoutant les équations conjuguées $\bar{w}_j = \Theta_j(\bar{z},\, z,\, w)$.

Mais on se gardera d'en déduire (comme dans [BER1999a]) que l'on peut choisir définitivement pour la représentation de M l'une de ses deux collections d'équations définissantes conjuguées. En effet, nous allons constater nettement dans la Section 7 ci-dessous qu'il est nécessaire d'effectuer un jeu alternatif permanent entre les deux systèmes d'équations, vus comme un couple d'objets symétriques articulés par la relation (3.4) : *cette ambiguïté est fondamentale*.

3.5. Complexification extrinsèque. Soient maintenant $\zeta \in \mathbb{C}^m$ et $\xi \in \mathbb{C}^d$ des nouvelles coordonnées indépendantes correspondant aux complexifications des variables $\bar{z}$ et $\bar{w}$, ce que l'on peut écrire symboliquement $\zeta := (\bar{z})^c$ et $\xi := (\bar{w})^c$, où la lettre «c» est l'initiale du mot «complexification». On notera $\tau := (\zeta,\, \xi) \in \mathbb{C}^n$ la complexification de $\bar{t}$. Dans la suite, on utilisera les notations légèrement abrégées $\overline{\Theta}(z,\, \bar{t})$ et $\Theta(\bar{z},\, t)$ plus fréquemment que $\overline{\Theta}(z,\, \bar{z},\, \bar{w})$ et $\Theta(\bar{z},\, z,\, w)$. En remplaçant $\bar{t}$ par τ dans les séries entières convergentes $\overline{\Theta}_j(z,\, \bar{t}) = \sum_{\beta\in\mathbb{N}^m,\, \alpha\in\mathbb{N}^n} \overline{\Theta}_{j,\, \beta,\, \alpha}\, z^\beta\, \bar{t}^\alpha$, où $\overline{\Theta}_{j,\, \beta,\, \alpha} \in \mathbb{C}$, on obtient des séries entières convergentes $\overline{\Theta}_j(z,\, \tau) := \sum_{\beta\in\mathbb{N}^m,\, \alpha\in\mathbb{N}^n} \overline{\Theta}_{j,\, \beta,\, \alpha}\, z^\beta\, \tau^\alpha$ des $m+n$ variables indépendantes $(z,\, \tau)$. La *complexification extrinsèque* $\mathscr{M} := (M)^c$ de M est alors la sous-variété analytique complexe de $\mathbb{C}^n \times \mathbb{C}^n$ passant par l'origine et de codimension d qui est définie par l'une des deux collections de d équations définissantes holomorphes

$$w_j = \overline{\Theta}_j(z,\, \tau) \qquad \text{ou} \qquad \xi_j = \Theta_j(\zeta,\, t), \tag{3.6}$$

qui sont évidemment équivalentes en vertu de la complexification de la relation (3.4), qui s'écrit :

$$\xi - \Theta(\zeta,\, t) \equiv \overline{a}(\tau,\, t)\, \left[w - \overline{\Theta}(z, \tau)\right]. \tag{3.7}$$

Notons que $\dim_{\mathbb{C}} \mathscr{M} = 2m+d$. Notons aussi que M se plonge dans $\mathbb{C}^n \times \mathbb{C}^n$ comme l'intersection de sa complexification $\mathscr{M}$ avec la diagonale antiholomorphe $\underline{\Lambda} := \{(t,\, \tau) \in \mathbb{C}^n \times \mathbb{C}^n :\, \tau = \bar{t}\}$. Cependant, dans toute la suite de ce mémoire, nous ne travaillerons désormais qu'avec des sous-variétés génériques complexifiées. C'est pourquoi *notre objet géométrique fondamental de départ est la sous-variété analytique complexe locale* $\mathscr{M}$ *définie par les équations* (3.6) *qui sont articulées par la relation de symétrie* (3.7). Plus analytiquement encore, *notre objet fondamental de départ est la collection des séries entières analytiques complexes* $\overline{\Theta}_j(z,\, \tau)$ *ainsi que leurs conjuguées* $\Theta_j(\zeta,\, t)$.

3.8. Paire de feuilletages invariants. Toute biholomorphisme local de $\mathbb{C}^n$ la forme $t' = h(t) = (h_1(t), \ldots, h_n(t)) \in \mathbb{C}\{t\}^n$ fixant l'origine induit par conjugaison l'anti-biholomorphisme $\bar{t}' = \bar{h}(\bar{t})$ et par conséquent, il se complexifie en un biholomorphisme $(t', \tau') = (h(t), \bar{h}(\tau))$ de $\mathbb{C}^n \times \mathbb{C}^n$ qui est d'une forme particulière, puisqu'il est à variables séparées. Géométriquement parlant, un tel biholomorphisme du produit $\mathbb{C}^n \times \mathbb{C}^n$ envoie les sous-ensembles $\{t = ct.\}$ et $\{\tau = ct.\}$ sur les sous-ensembles $\{t' = ct.\}$ et $\{\tau' = ct.\}$: il stabilise la paire de feuilletages triviaux qui sont parallèles aux axes de coordonnées «horizontales» t et «verticales» τ. Par conséquent, tous les concepts analytico-géométriques locaux qui sont attachés à M d'une manière qui est invariante par rapport aux changements de coordonnées holomorphes de la forme $t \mapsto h(t)$ coïncident avec les objets analytico-géométriques de $\mathscr{M}$ qui sont invariants par rapport au sous-groupe (infini) de transformations de la forme $(t, \tau) \mapsto (h(t), \bar{h}(\tau))$. En particulier, les deux feuilletages de $\mathscr{M}$ dont les feuilles sont les intersections de $\mathscr{M}$ avec les sous-ensembles $\{t = ct.\}$ et $\{\tau = ct.\}$ sont invariants. Analytiquement, ces feuilles sont ce qu'on appellera les *sous-variétés de Segre complexifiées* $\mathscr{S}_{\tau_p}$ et les *sous-variétés de Segre complexifiées conjuguées*[5], définies par

(3.9)
$$\begin{cases} \mathscr{S}_{\tau_p} := \big\{(t, \tau) \in \mathbb{C}^{2n} : \tau = \tau_p, \ w = \overline{\Theta}(z, \tau_p)\big\} = \mathscr{M} \cap \{\tau = \tau_p\} \quad \text{et} \\ \underline{\mathscr{S}}_{t_p} := \big\{(t, \tau) \in \mathbb{C}^{2n} : t = t_p, \ \xi = \Theta(\zeta, t_p)\big\} = \mathscr{M} \cap \{t = t_p\}, \end{cases}$$

où $\tau_p \in \mathbb{C}^n$ et $t_p \in \mathbb{C}^n$ sont fixes.

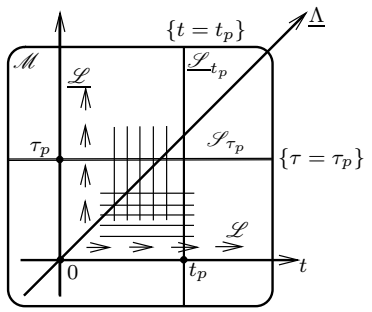

La complexification d'une sous-variété analytique réelle porte une paire de feuilletages invariants qui sont les sous-variétés intégrales des complexifiés des champs de vecteurs de types $(1, 0)$ et $(0, 1)$ et qui s'identifient aussi aux sous-variétés de Segre complexifiées.

FIGURE 1: GÉOMÉTRIE DE LA COMPLEXIFICATION $\mathscr{M}$

Le diagramme ci-dessus a pour objet de représenter cette paire fondamentale de feuilletages. Cependant, nous mettons le lecteur en garde, parce

[5]Avant complexification, on peut définir préalablement les sous-variétés de Segre classiques $S_{\bar{t}_p} \subset \mathbb{C}^n$ ([Se1931a], [25], [Se1932], [We1977], [We1977]) et conjuguées $\overline{S}_{t_p} \subset \mathbb{C}^n$ (traditionnellement ignorées), que l'on envisage d'emblée comme un couple symétrique articulé par la conjugaison complexe (*voir* surtout [Me1998] et [Me2003]).

que sur cette figure bidimensionnelle, la codimension dans $\mathscr{M}$ de la paire de feuilletages semble nulle alors qu'en réalité, elle est strictement positive :

$$\dim_{\mathbb{C}} \mathscr{M} - \dim_{\mathbb{C}} \mathscr{S}_{\tau_p} - \dim_{\mathbb{C}} \underline{\mathscr{S}}_{t_p} = d \geq 1. \tag{3.10}$$

Pour se représenter intuitivement la situation géométrique d'une manière plus adéquate, on devrait imaginer par exemple que $\mathscr{M}$ est un cube de dimension trois équipé de deux feuilletages par des courbes qui sont en position générale.

3.11. Flots de champs CR complexifiés. On dira intuitivement que $\mathscr{M}$ est *minimale à l'origine* si l'on peut recouvrir un voisinage de 0 dans $\mathscr{M}$ en se déplaçant alternativement le long des sous-variétés de Segre complexifiées et le long des sous-variétés de Segre complexifiées conjuguées. Afin de définir rigoureusement cette condition (*voir* la Définition 3.19 *infra*), il est nécessaire d'exprimer mathématiquement ce que l'on entend par déplacement alternatif le long de la paire de feuilletages invariants.

Pour cela, complexifions une famille génératrice $L_1, \dots, L_m$ de champs de vecteurs CR tangents à M de type $(1, 0)$ ainsi que leurs conjugués $\overline{L}_1, \dots, \overline{L}_m$ qui sont de type $(0, 1)$. On peut choisir explicitement les générateurs $L_k := \frac{\partial}{\partial z_k} + \sum_{j=1}^d \frac{\partial \overline{\Theta}_j}{\partial z_k}(z, \bar{z}, \bar{w}) \frac{\partial}{\partial w_j}$ pour $k = 1, \dots, m$. Les complexifications fournissent deux collections de m champs de vecteurs à coefficients analytiques donnés explicitement par

$$\begin{cases} \mathscr{L}_k := \dfrac{\partial}{\partial z_k} + \displaystyle\sum_{j=1}^d \dfrac{\partial \overline{\Theta}_j}{\partial z_k}(z, \zeta, \xi) \dfrac{\partial}{\partial w_j}, \quad k = 1, \dots, m, \qquad \text{et} \\ \underline{\mathscr{L}}_k := \dfrac{\partial}{\partial \zeta_k} + \displaystyle\sum_{j=1}^d \dfrac{\partial \Theta_j}{\partial \zeta_k}(\zeta, z, w) \dfrac{\partial}{\partial \xi_j}, \quad k = 1, \dots, m. \end{cases} \tag{3.12}$$

On vérifie immédiatement que $\mathscr{L}_k \big(w_j - \overline{\Theta}_j(z, \zeta, \xi)\big) \equiv 0$, ce qui montre que les champs de vecteurs $\mathscr{L}_k$ sont tangents à $\mathscr{M}$. De manière analogue, $\underline{\mathscr{L}}_k (\xi_j - \Theta_j(\zeta, z, w)) \equiv 0$, de telle sorte que les champs de vecteurs $\underline{\mathscr{L}}_k$ sont aussi tangents à $\mathscr{M}$. De plus, on vérifie immédiatement les relations de commutation $[\mathscr{L}_k, \mathscr{L}_{k'}] = 0$ et $[\underline{\mathscr{L}}_k, \underline{\mathscr{L}}_{k'}] = 0$ pour tous $k, k' = 1, \dots, m$. D'après le théorème de Frobenius, il découle de ces relations de commutation que chacune des distributions m-dimensionnelles engendrées par ces deux collections de champs de vecteurs est intégrable ; cela n'a rien de surprenant, puisque les variétés intégrales de $\{\mathscr{L}_k\}_{1 \leq k \leq m}$ ne sont autres que les variétés de Segre complexifiées, tandis que les variétés intégrales de $\{\underline{\mathscr{L}}_k\}_{1 \leq k \leq m}$ ne sont autres que les variétés de Segre complexifiées conjuguées. Bien sûr, en général les $\mathscr{L}_k$ ne commutent pas avec les $\underline{\mathscr{L}}_{k'}$: c'est justement la non-intégrabilité de la distribution CR complexifiée engendrée par les deux familles $\{\mathscr{L}_k, \underline{\mathscr{L}}_{k'}\}_{1 \leq k, k' \leq m}$ qui est responsable de la minimalité (*cf.* Lemme 3.22 *infra*).

Grâce à cette paire de familles de champs de vecteurs, on peut paramétrer les sous-variétés de Segre complexifiées (conjuguées). En

effet, introduisons les flots «multiples» des deux collections $(\mathscr{L}_k)_{1\leq k\leq m}$ et $(\underline{\mathscr{L}}_{k'})_{1\leq k'\leq m}$. Si p est un point arbitraire de $\mathscr{M}$ dont les coordonnées $(w_p,\, z_p,\, \zeta_p,\, \xi_p) \in \mathbb{C}^{2n}$ satisfont les équations (3.6) et si $z_1 := (z_{1,1}, \ldots,\, z_{1,m}) \in \mathbb{C}^m$ est un paramètre de «multitemps» complexe arbitraire, définissons le «multiflot» de $\mathscr{L}$ par

(3.13)
$$\begin{cases} \mathscr{L}_{z_1}(z_p,\, w_p,\, \zeta_p,\, \xi_p) \;:= \exp\,(z_1\mathscr{L})(p) := \exp(z_{1,1}\mathscr{L}_1(\cdots(\exp(z_{1,m}\mathscr{L}_m(p)))\cdots)) \\ \qquad\qquad\qquad\qquad := \big(z_p + z_1,\, \overline{\Theta}(z_p + z_1,\, \zeta_p,\, \xi_p),\, \zeta_p,\, \xi_p\big)\,. \end{cases}$$

Bien entendu, $\mathscr{L}_{z_1}(p)$ appartient à $\mathscr{M}$. De manière analogue, pour $p \in \mathscr{M}$ et $\zeta_1 \in \mathbb{C}^m$, le «multiflot» de $\underline{\mathscr{L}}$ se définit par

$$\underline{\mathscr{L}}_{\zeta_1}(z_p,\, w_p,\, \zeta_p,\, \xi_p) := (z_p,\, w_p,\, \zeta_p + \zeta_1,\, \Theta(\zeta_p + \zeta_1,\, z_p,\, w_p)), \tag{3.14}$$

et l'on a $\underline{\mathscr{L}}_{\zeta_1}(p) \in \mathscr{M}$. Notons que les deux applications (3.13) et (3.14) sont holomorphes par rapport à leurs variables.

3.15 Chaînes de Segre. Ainsi, plaçons tout d'abord le point p à l'origine et déplaçons-nous le long de la variété de Segre complexifiée conjuguée $\underline{\mathscr{L}}_0$ d'une hauteur de $z_1 \in \mathbb{C}^m$, c'est-à-dire considérons le point $\underline{\mathscr{L}}_{z_1}(0)$, que nous noterons aussi $\underline{\Gamma}_1(z_1)$. Bien sûr, on a $\underline{\Gamma}_1(0) = 0$. Soit $z_2 \in \mathbb{C}^m$. En partant de ce point $\underline{\Gamma}_1(z_1)$, déplaçons-nous horizontalement le long de la variété de Segre complexifiée d'une longueur de $z_2 \in \mathbb{C}^m$, c'est à dire considérons le point

$$\underline{\Gamma}_2(z_1,\, z_2) := \mathscr{L}_{z_2}(\underline{\mathscr{L}}_{z_1}(0)). \tag{3.16}$$

Ensuite, définissons $\underline{\Gamma}_3(z_1,\, z_2,\, z_3) := \underline{\mathscr{L}}_{z_3}(\mathscr{L}_{z_2}(\underline{\mathscr{L}}_{z_1}(0)))$, puis

$$\underline{\Gamma}_4(z_1,\, z_2,\, z_3,\, z_4) := \mathscr{L}_{z_4}(\underline{\mathscr{L}}_{z_3}(\mathscr{L}_{z_2}(\underline{\mathscr{L}}_{z_1}(0)))), \tag{3.17}$$

et ainsi de suite. Le diagramme suivant illustre le procédé :

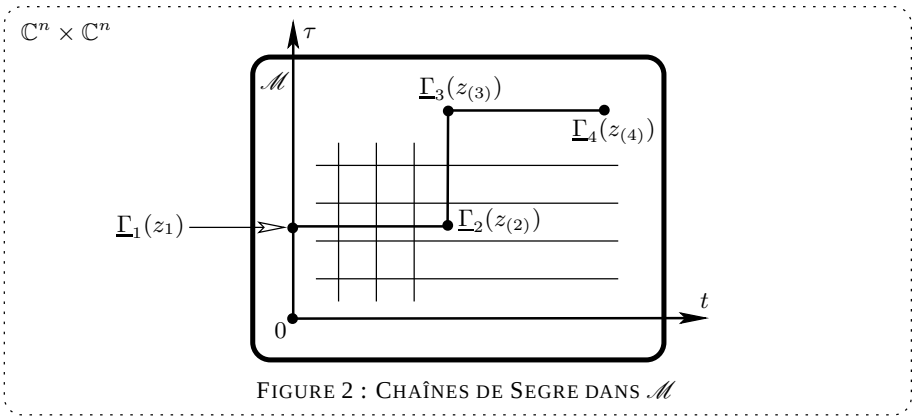

FIGURE 2 : CHAÎNES DE SEGRE DANS $\mathscr{M}$

Par récurrence, pour tout entier positif k, on obtient une application holomorphe locale $\underline{\Gamma}_k(z_1,\, \ldots,\, z_k)$ à valeurs dans $\mathscr{M}$, définie pour $z_1,\, \ldots,\, z_k \in \mathbb{C}^m$ suffisamment petits et satisfaisant $\underline{\Gamma}_k(0,\, \ldots,\, 0) = 0$. Dans la suite,

nous utiliserons souvent l'abréviation $z_{(k)} := (z_1, \ldots, z_k) \in \mathbb{C}^{mk}$ et nous appellerons $\underline{\Gamma}_k$ la *k-ième chaîne de Segre conjuguée*.

Si l'on commençait cette suite d'applications holomorphes composées par le flot de $\mathscr{L}$ au lieu de commencer par celui de $\underline{\mathscr{L}}$, on obtiendrait des applications $\Gamma_1(z_1) := \mathscr{L}_{z_1}(0)$, puis $\Gamma_2(z_{(2)}) := \underline{\mathscr{L}}_{z_2}(\mathscr{L}_{z_1}(0))$, *etc.*, et généralement $\Gamma_k(z_{(k)})$. Nous appellerons Γ_k la *k-ième chaîne de Segre*.

Puisque $\Gamma_k(0) = \underline{\Gamma}_k(0) = 0$, pour tout entier strictement positif k, il existe un cube (polydisque) suffisamment petit $\square_{mk}(\delta_k)$ centré à l'origine dans $\mathbb{C}^{mk}$ et de rayon $\delta_k > 0$ tel que $\Gamma_k(z_{(k)})$ et $\underline{\Gamma}_k(z_{(k)})$ appartiennent à $\mathscr{M}$ pour tout $z_{(k)} \in \square_{mk}(\delta_k)$.

Il existe une relation de symétrie entre Γ_k et $\underline{\Gamma}_k$. En effet, soit $\overline{\sigma}$ l'involution antiholomorphe de $\mathbb{C}^n \times \mathbb{C}^n$ définie par $\overline{\sigma}(t, \tau) := (\bar{\tau}, \bar{t})$. Puisque l'on a $w = \overline{\Theta}(z, \zeta, \xi)$ si et seulement si $\xi = \Theta(\zeta, z, w)$, cette involution envoie $\mathscr{M}$ dans $\mathscr{M}$ et elle fixe aussi point par point la diagonale antiholomorphe $\underline{\Lambda}$. En appliquant $\overline{\sigma}$ aux définitions (3.13) et (3.14) des flots de $\mathscr{L}$ et de $\underline{\mathscr{L}}$, on vérifie aisément que $\overline{\sigma}(\mathscr{L}_{z_1}(p)) = \underline{\mathscr{L}}_{\bar{z}_1}(\overline{\sigma}(p))$. Il en découle la relation de symétrie générale $\overline{\sigma}\left(\Gamma_k(z_{(k)})\right) = \underline{\Gamma}_k\left(\overline{z_{(k)}}\right)$. Dans la suite de ce mémoire, nous travaillerons essentiellement avec les applications $\underline{\Gamma}_k$.

3.18. Minimalité locale. Observons que $\mathscr{L}_0(p) = p$ et que $\underline{\mathscr{L}}_0(p) = p$; autrement dit, $\mathscr{L}_0$ et $\underline{\mathscr{L}}_0$ coïncident avec l'application identité. Nous en déduisons l'identité : $\Gamma_{k+1}(z_{(k)}, 0) \equiv [\mathscr{L} \text{ ou } \underline{\mathscr{L}}]_0\left(\Gamma_k(z_{(k)})\right) \equiv \Gamma_k(z_{(k)})$. Par conséquent, les rangs des applications $\underline{\Gamma}_k$ croissent avec k. Bien entendu, ces rangs sont bornés par $\dim_{\mathbb{C}} \mathscr{M} = 2m + d$. On déduit aussi des relations $\Gamma_{k+1}(z_{(k)}, 0) = \Gamma_k(z_{(k)})$ que pour tout $k \geq 2$, le rang à l'origine de $\underline{\Gamma}_k$ est invariablement égal à $2m$, mais en des points $\underline{z}^*_{(k)} \in \square_{mk}(\delta_k)$ distincts de l'origine, le rang des applications $\underline{\Gamma}_k$ peut augmenter jusqu'à atteindre $2m+d$. Nous pouvons maintenant énoncer la définition précise de la notion de minimalité.

Definition 3.19. La sous-variété complexifiée $\mathscr{M}$ d'une sous-variété locale de $\mathbb{C}^n$ analytique réelle, générique M est dite *minimale à l'origine* s'il existe un entier $\mu_0 \geq 1$ et des points $\underline{z}^*_{(\mu_0)} \in \square_{m\mu_0}(\delta_{\mu_0})$, arbitrairement proches de l'origine satisfaisant $\underline{\Gamma}_{\mu_0}\left(\underline{z}^*_{(\mu_0)}\right) = 0$ tels que l'application $\underline{\Gamma}_{\mu_0}$ est de rang (maximal possible) égal à $2m + d$ en ces points $\underline{z}^*_{(\mu_0)}$.

Dans ce cas, l'image d'un petit voisinage d'un tel point $\underline{z}^*_{(\mu_0)}$ dans $\mathbb{C}^{m\mu_0}$ contient un petit voisinage de 0 dans $\mathscr{M}$. Grâce à la relation $\overline{\sigma}\left(\Gamma_k(z_{(k)})\right) = \underline{\Gamma}_k\left(\overline{z_{(k)}}\right)$, une propriété similaire est satisfaite par Γ_{μ_0}, avec le même entier μ_0. On dira aussi que M est minimale à l'origine si sa complexifiée $\mathscr{M}$ l'est, au sens de cette définition.

Bien qu'il ne soit pas nécessaire, *stricto sensu*, de commenter cette condition de minimalité pour comprendre la démonstration du Théorème 1.23, formulons quand même quelques énoncés explicatifs.

3.20. Commentaires. Rappelons que le *rang générique* d'une application holomorphe entre deux cubes complexes est le maximum de son rang aux différents points du cube à la source. En travaillant d'abord avec le rang générique des applications $\underline{\Gamma}_k$, qui lui aussi croît avec k, on démontre des propriétés élémentaires que nous résumons dans l'énoncé suivant, établi dans la Section 7 de [Me1998] et dans le Chapitre 2 de [Me2003].

Théorème 3.21. La minimalité en 0 de la sous-variété générique complexifiée $\mathscr{M} = (M)^c$ de $\mathbb{C}^n$ est une propriété invariante par biholomorphisme local : elle ne dépend ni du choix d'équations définissantes pour M, ni du choix d'un système de coordonnées holomorphes s'annulant au point de référence, ni du choix d'un système générateur de champs CR complexifiés (conjugués) $(\mathscr{L}_k)_{1\leq k\leq m}$ et $(\underline{\mathscr{L}}_k)_{1\leq k\leq m}$. De plus, il existe un entier invariant ν_0 satisfaisant $\nu_0 \leq d+1$, qu'on appellera le type de Segre de M à l'origine, qui est le plus petit entier k tel que les applications Γ_k et $\underline{\Gamma}_k$ sont de rang générique égal à $2m+d$ sur le cube $\square_{mk}(\delta_k)$, pour tout $k \geq \nu_0+1$. Enfin, l'entier impair $\mu_0 := 2\nu_0+1$, que l'on appellera le type de Segre de $\mathscr{M}$ à l'origine, est le plus petit entier k tel que les applications Γ_k et $\underline{\Gamma}_k$ sont de rang égal à $2m+d$ en des points $z^*_{(k)} \in \square_{mk}(\delta_k)$ et $\underline{z}^*_{(k)} \in \square_{mk}(\delta_k)$ satisfaisant $\Gamma_k\left(z^*_{(k)}\right) = 0$ et $\underline{\Gamma}_k\left(\underline{z}^*_{(k)}\right) = 0$ qui sont arbitrairement proches de l'origine dans $\mathbb{C}^{mk}$.

Le fait qu'il existe de tels points $z^*_{(k)}$ et $\underline{z}^*_{(k)}$ arbitrairement proches de l'origine est dû à la propriété qu'ont les applications holomorphes locales d'atteindre leur rang générique en tout point d'un ouvert de Zariski dense de l'espace source, grâce au principe du prolongement analytique (*cf.* [Me1998], [Me2003]). Ce fait assez crucial sera utilisé dans le §3.31 ci-dessous.

Le procédé de démonstration de ce théorème est inspiré de la construction des orbites de champs de vecteurs, telle qu'elle apparaît dans l'article [Su1973], dont la nouveauté principale résidait dans le traitement des systèmes de champs de vecteurs de classe $\mathscr{C}^\infty$, par opposition aux champs dont les coefficients sont analytiques. Mais dans la catégorie analytique, un théorème semblable était connu depuis l'article [Na1966], où l'auteur raisonne plutôt en considérant l'algèbre de Lie engendrée par un système de champs de vecteurs analytiques. H.J. Sussmann démontre une proposition générale établissant l'équivalence entre ces deux procédés ([Su1973], Theorem 8.1 et §9), laquelle, spécifiée à la géométrie CR analytique locale, nous offre l'énoncé suivant :

Lemme 3.22. ([BER1996], [Me1998]) La sous-variété générique analytique complexifiée $\mathscr{M} = (M)^c$ de $\mathbb{C}^n$ est minimale à l'origine (au sens de la Définition 3.19) si et seulement si l'algèbre de Lie engendrée par les sections locales du fibré tangent complexe $T^cM = TM \cap JTM$ engendre l'espace tangent à M à l'origine (cette algèbre de Lie est constituée de toutes les combinaisons linéaires à coefficients analytiques réels de crochets de Lie

emboîtés $[X_1[X_2[X_3[\ldots[X_k,\, X_{k+1}]\ldots]]]]$ de longueur finie k arbitraire, ainsi que tous les crochets de Lie formés à partir de ces crochets, où les X_l sont des sections de T^cM).

Cette deuxième condition, plus ancienne, est classique. Certains auteurs appellent la sous-variété générique M *de type fini à l'origine* (au sens de T. Bloom et I. Graham) si les crochets de Lie de T^cM de longueur arbitraire engendrent TM à l'origine. Nous préférons l'appellation de *minimalité à l'origine* (au sens de J.-M. Trépreau et A.E. Tumanov), puisque ce sont les orbites des champs de vecteurs CR complexifiés qui sont les «bons objets», et non leurs crochets de Lie. En effet, ce sont les travaux profonds de J.-M. Trépreau [Tr1986], [Tr1990] et de A.E. Tumanov [Tu1988], [Tu1994] qui ont fait définitivement comprendre l'adéquation de la correspondance entre les orbites CR et les wedges attachés pour l'extension holomorphe des fonctions CR (*cf.* aussi [Me1994]).

Rappelons aussi que les deux concepts que sont les flots de champs de vecteurs et leurs crochets de Lie sont étrangers l'un à l'autre quant à la combinatoire des calculs, comme l'illustrent les nombreux exemples que l'on trouve à la Section 8 de [Me1998]. De plus, la démonstration d'un théorème essentiellement équivalent au Théorème 3.21 que l'on trouve dans [BER1996] et dans [BER1999a] utilise fortement les crochets de champs de vecteurs et un système de coordonnées dites «normales», qui sont adaptées aux *nombres de L. Hörmander* de la structure, lesquels sont des invariants combinatoires décrivant les sauts de dimension occasionnés par le calcul successif des crochets de Lie (*voir* les chapitres 4 et 10 de [BER1999a]). En adoptant le point de vue «crochets de Lie», les démonstrations deviennent extraordinairement techniques, et ce, sans nécessité interne. On pourrait de surcroît s'étonner que dans le livre [BER1999a] (publié dans une collection prestigieuse) qui contient une copie de la démonstration du théorème de H.J. Sussmann (§3.1 : *Nagano's theorem* ; §3.2 : *Sussmann's theorem*), le lien naturel entre le procédé de H.J. Sussmann et ce que les auteurs appellent «ensembles de Segre» (qui sont en vérité des projections sur $\mathbb{C}^n$ des images dans $\mathscr{M}$ des applications $\underline{\Gamma}_k$ ou Γ_k), n'ait pas été observé.

Deux ans après l'apparition de notre prépublication électronique [Me1998] (travail non publié), S.M. Baouendi, P. Ebenfelt et L.-P. Rothschild ont repris en partie notre point de vue basé sur l'article de H.J. Sussmann, afin de construire plus économiquement leurs «ensembles de Segre» ; leur prépublication fut publiée dans une revue spécialisée en géométrie algébrique pure : [BER2003]. Néanmoins, dans cette référence, le point de vue exprimé par les FIGURES 1 et 2 ci-dessus est absent : on n'y trouve ni mention de la paire de feuilletages invariants, ni description intrinsèque de la symétrie par conjugaison complexe ni aucune «vision» géométrique. De plus, ces auteurs évitent de mentionner que l'extraordinaire technicité des chapitres 4 et 10 de leur livre [BER1999a] devient caduque.

Le point de vue ensembliste qui consiste à considérer les projections sur $\mathbb{C}^n$ des images des chaînes de Segre, *i.e.* les ensembles $\pi_t\left(\underline{\Gamma}_k(z_{(k)})\right)$ n'apporte rien du point de vue fonctionnel. Ce sont au contraire les chaînes de Segre Γ_k et $\underline{\Gamma}_k$ vues comme *applications holomorphes locales* ainsi que leur propriété de submersivité (dans le cas minimal) qui sont vraiment utilisées dans l'étude du principe de réflexion analytique. Par conséquent, nous n'adopterons jamais la terminologie «ensembles de Segre».

En conclusion, retenons seulement la propriété de submersivité de $\underline{\Gamma}_k$ énoncée dans la Définition 3.19.

3.23. Projections des submersions Γ_k et $\underline{\Gamma}_k$ sur $\mathscr{M}$. Soit $\mu_0 = 2\nu_0 + 1$ le type de Segre type de $\mathscr{M}$ à l'origine 0, qui est toujours impair. Si $\mathscr{M}$ est minimale à l'origine, les deux applications holomorphes locales

$$\Gamma_{\mu_0} \text{ et } \underline{\Gamma}_{\mu_0} \ : \quad \square_{m\mu_0}(\delta_{\mu_0}) \longrightarrow \mathscr{M} \tag{3.24}$$

satisfont $\Gamma_{\mu_0}(z^*_{(\mu_0)}) = 0$ et $\underline{\Gamma}_{\mu_0}(\underline{z}^*_{\mu_0}) = 0$ et elles sont submersives en $z^*_{(\mu_0)}$ et $\underline{z}^*_{(\mu_0)}$, c'est-à-dire de rang (maximal) égal à $\dim_{\mathbb{C}} \mathscr{M}$.

Si l'on veut quitter l'espace $\mathbb{C}^n \times \mathbb{C}^n$ où vit la complexification $\mathscr{M}$ et revenir à l'espace $\mathbb{C}^n$ des coordonnées t où vit M (ou à l'espace des coordonnées τ où vit la conjuguée $\overline{M}$ de M), on peut aussi utiliser la propriété de submersivité des deux applications (3.24) en les composant à gauche avec l'une des deux projections $\pi_t(t, \tau) := t$ et $\pi_\tau(t, \tau) := \tau$ (sur les sous-espaces de coordonnées «horizontales» et «verticales»), qui sont bien évidemment submersives, ce qui donne deux couples de possibilité : $\pi_t\left(\Gamma_{\mu_0}(z_{(\mu_0)})\right)$, $\pi_t\left(\underline{\Gamma}_{\mu_0}(z_{(\mu_0)})\right)$ et $\pi_\tau\left(\Gamma_{\mu_0}(z_{(\mu_0)})\right)$, $\pi_\tau\left(\underline{\Gamma}_{\mu_0}(z_{(\mu_0)})\right)$. Pour deux de ces quatre expressions, une légère simplification formelle intervient alors : nous affirmons que l'on a les deux relations

$$\begin{cases} \pi_t\left(\underline{\Gamma}_{2\nu_0+1}(z_{(2\nu_0+1)})\right) \equiv \pi_t\left(\underline{\Gamma}_{2\nu_0}(z_{(2\nu_0)})\right) & \text{et} \\ \pi_\tau\left(\Gamma_{2\nu_0+1}(z_{(2\nu_0+1)})\right) \equiv \pi_\tau\left(\Gamma_{2\nu_0}(z_{(2\nu_0)})\right). \end{cases} \tag{3.25}$$

En effet, puisque $\mu_0 = 2\nu_0+1$ est impair, le premier terme de flot (à gauche) de la chaîne de Segre conjuguée $\underline{\Gamma}_{2\nu_0+1}(z_{(2\nu_0+1)})$ est le terme $\underline{\mathscr{L}}_{z_{2\nu_0+1}}$, c'est-à-dire que l'on peut écrire

$$\underline{\Gamma}_{2\nu_0+1}\left(z_{(2\nu_0+1)}\right) = \underline{\mathscr{L}}_{z_{2\nu_0+1}}\left(\underline{\Gamma}_{2\nu_0}(z_{(2\nu_0)})\right). \tag{3.26}$$

Si l'on note les quatre coordonnées du point $\underline{\Gamma}_{2\nu_0}(z_{(2\nu_0)})$ par

$$\left(z(z_{(2\nu_0)}),\, w(z_{(2\nu_0)}),\, \zeta(z_{(2\nu_0)}),\, \xi(z_{(2\nu_0)})\right), \tag{3.27}$$

une application de la formule (3.14) nous donnne

(3.28)

$$\begin{cases} \underline{\Gamma}_{2\nu_0+1}(z_{(2\nu_0+1)}) &= \underline{\mathscr{L}}_{z_{2\nu_0+1}}\left(\underline{\Gamma}_{2\nu_0}(z_{(2\nu_0)})\right) \\ &= \big(z(z_{(2\nu_0)}),\, w(z_{(2\nu_0)}),\, z_{2\nu_0+1} + \zeta(z_{(2\nu_0)}), \\ &\quad \Theta\left(z_{2\nu_0+1} + \zeta(z_{(2\nu_0)}),\, z(z_{(2\nu_0)}),\, w(z_{(2\nu_0)})\right)\big). \end{cases}$$

Puisque $\pi_t(z,\, w,\, \zeta,\, \xi) = (z,\, w)$, la première relation (3.25) est évidente. La seconde se vérifie de manière analogue.

Au total, on obtient deux submersions à valeurs dans $\mathbb{C}^n_t$ et dans $\mathbb{C}^n_\tau$.

Corollary 3.29. *Si M est minimale à l'origine, il existe un entier $\nu_0 \leq d+1$, le type de Segre de M à l'origine, et il existe des points $\underline{z}^*_{(2\nu_0)} \in \mathbb{C}^{2m\nu_0}$ et $z^*_{(2\nu_0)} \in \mathbb{C}^{2m\nu_0}$ arbitrairement proches de l'origine tels que les deux applications*

$$\begin{cases} \mathbb{C}^{2m\nu_0} \ni z_{(2\nu_0)} \longmapsto \pi_t\left(\underline{\Gamma}_{2\nu_0}(z_{(2\nu_0)})\right) \in \mathbb{C}^n \quad \text{et} \\ \mathbb{C}^{2m\nu_0} \ni z_{(2\nu_0)} \longmapsto \pi_\tau\left(\Gamma_{2\nu_0}(z_{(2\nu_0)})\right) \in \mathbb{C}^n \end{cases} \tag{3.30}$$

sont de rang n et s'annulent aux deux points $\underline{z}^*_{(2\nu_0)}$ et $z^*_{(2\nu_0)}$.

3.31. Résumé : utilisation concrète de la minimalité. Nous sommes maintenant en mesure de ramener les théorèmes de convergence annoncés dans l'Introduction à des propriétés de convergence sur les chaînes de Segre conjuguées.

Lemme 3.32. Pour démontrer le Théorème 1.39, il suffit d'établir que pour tout $k \in \mathbb{N}$, les applications formelles $z_{(k)} \longmapsto_{\mathscr{F}} h\left(\pi_t\left(\underline{\Gamma}_k(z_{(k)})\right)\right)$ sont convergentes, *i.e.* appartiennent à $\mathbb{C}\{z_{(k)}\}^{n'}$. De même, pour démontrer le Théorème principal 1.23, il suffit d'établir que les applications formelles $z_{(k)} \longmapsto_{\mathscr{F}} \xi' - \Theta'\left(\zeta',\, h\left(\pi_t\left(\underline{\Gamma}_k(z_{(k)})\right)\right)\right) \in \mathbb{C}\{\zeta',\, z_{(k)}\}^{d'}$ sont convergentes pour tout $k \in \mathbb{N}$. Ces deux propriétés sont satisfaites en remplaçant $\underline{\Gamma}_k$ par Γ_k.

Ce sont effectivement ces propriétés de convergence qui apparaîtront naturellement dans les Sections 5, 6 et 7 ci-dessous. Par souci d'élégance et de symétrie, nous travaillerons simultanément avec les deux composantes h et $\overline{h}$ de l'application complexifiée $h^c = (h,\, \overline{h})$: sans composer avec les projections π_t et π_τ, nous démontrerons que $z_{(k)} \longmapsto_{\mathscr{F}} h^c\left(\underline{\Gamma}_k(z_{(k)})\right)$ converge pour tout k

Proof. En effet, prenons $k := 2\nu_0$ et supposons l'application formelle

$$z_{(2\nu_0)} \longmapsto_{\mathscr{F}} h\left(\pi_t\left(\underline{\Gamma}_{2\nu_0}(z_{(2\nu_0)})\right)\right) =: H(z_{(2\nu_0)}) \tag{3.33}$$

convergente. Puisque l'on peut choisir un point $\underline{z}^*_{(2\nu_0)}$ arbitrairement proche de l'origine où la première application (3.30) est submersive, assurons-nous que ce point $z^*_{(2\nu_0)}$ appartient au domaine de convergence normale de $H(z_{(2\nu_0)})$. Soit $s := (s_1,\, \ldots,\, s_n) \in \mathbb{C}^n$ et soit $s \mapsto \phi_{2\nu_0}(s) \in \mathbb{C}^{2m\nu_0}$ une application affine satisfaisant $\phi_{2\nu_0}(0) = \underline{z}^*_{2\nu_0}$ telle que l'application holomorphe locale $s \longmapsto \pi_t\left(\underline{\Gamma}_{2\nu_0}(\phi_{2\nu_0}(s))\right)$ est de rang n en $s = 0$. On déduit d'abord que

$$h\left(\pi_t\left(\underline{\Gamma}_{2\nu_0}(\phi_{(2\nu_0)}(s))\right)\right) \equiv H(\phi_{2\nu_0}(s)) \in \mathbb{C}\{s\}^{n'} \tag{3.34}$$

est convergente. Ensuite, puisque $s \longmapsto \pi_t\left(\underline{\Gamma}_{2\nu_0}(\phi_{2\nu_0}(s))\right)$ est de rang n en $s = 0$, on conclut que $h(t) \in \mathbb{C}\{t\}^{n'}$ est convergente.

La seconde assertion du Lemme 3.32 se vérifie de manière similaire. $\square$

§4. Jets de sous-variétés de Segre et application de réflexion

4.1. Préliminaire. Dans l'article fondamental [We1978], généralisé plus tard en codimension supérieure (*cf.* [We1982]), S.M. Webster a introduit l'application qui, à un point p d'une hypersurface analytique réelle M de $\mathbb{C}^n$, associe le plan tangent complexe à M en p, c'est-à-dire $p \mapsto (p,\, T_p^c M)$, et il a observé que l'image de l'hypersurface M est une sous-variété analytique totalement réelle de $\mathbb{C}^{2n-1}$ si et seulement si M est Levi non-dégénérée. Puisque la sous-variété de Segre $S_{\bar{p}}$ passant par $p \in M$ admet comme espace tangent en p le même sous-espace $T_p^c M$, cette application s'identifie avec l'application qui, à un point p de M, associe le jet d'ordre 1 de la sous-variété de Segre passant par p. Dans [9], K. Diederich et S.M. Webster ont généralisé cette idée en introduisant les jets d'ordre arbitraire des sous-variétés de Segre ; ils ont ainsi exhibé des conditions nouvelles de non-dégénérescence, plus générales que la Levi non-dégénérescence. Puisqu'aucun travail de fondation n'a été publié jusqu'à présent pour décrire ces concepts, nous entreprenons de résumer ici les éléments d'une théorie autonome des jets de sous-variétés de Segre. Nous élaborerons ainsi un point de vue alternatif aux calculs non géométriques du Chapitre 11 de [BER1999a].

4.2. Définitions fondamentales. Soit $\mathscr{M}$ la complexification extrinsèque d'une sous-variété analytique réelle générique définie par les deux jeux symétriques d'équations (3.6). Rappelons que la sous-variété de Segre complexifiée $\underline{\mathscr{S}}_t$ peut être considérée comme le sous-ensemble de $\mathbb{C}^n$ défini par $\{\tau = (\zeta,\, \xi) \in \mathbb{C}^n \,:\, \xi = \Theta(\zeta,\, t)\}$, où t est considéré comme fixé. Elle est paramétrée par $\zeta \in \mathbb{C}^m$. Introduisons alors l'application des jets d'ordre k de $\underline{\mathscr{S}}_t$ en l'un de ses points $(\zeta,\, \Theta(\zeta,\, t))$, qui est définie précisément par

$$J_\tau^k \underline{\mathscr{S}}_t := \left(\zeta,\, \left(\frac{1}{\beta!}\, \partial_\zeta^\beta \Theta_j(\zeta,\, t)\right)_{1 \leq j \leq d,\, |\beta| \leq k}\right). \tag{4.3}$$

Elle est à valeurs dans $\mathbb{C}^{m+N_{d,\,m,\,k}}$ où $N_{d,\,m,\,k} := d\, \frac{(m+k)!}{m!\; k!}$ est le nombre de dérivées partielles qui apparaissent à droite de la virgule du second membre de (4.3). Remarquons que les termes $(\zeta_1,\, \ldots,\, \zeta_m)$ apparaissent comme premières composantes de l'application (4.3). Remarquons aussi que si $k_2 \geq k_1$ et si $\pi_{k_2,\,k_1}$ désigne la projection caonique $\mathbb{C}^{m+N_{d,\,m,\,k_2}} \to \mathbb{C}^{m+N_{d,\,m,\,k_1}}$, on a : $\pi_{k_2,\,k_1}(J_\tau^{k_2} \underline{\mathscr{S}}_t) = J_\tau^{k_1} \underline{\mathscr{S}}_t$. Nous noterons dans la suite cette application par $(t,\, \tau) \mapsto J_\tau^k \underline{\mathscr{S}}_t$, où nous sous-entendons que $(t,\, \tau) \in \mathscr{M}$.

De manière analogue, introduisons l'application des jets d'ordre k de la sous-variété de Segre complexifiée $\mathscr{S}_\tau$ en l'un de ses points $\big(z,\, \overline{\Theta}(z, \tau)\big)$. Elle est définie précisément par

$$J_t^k \mathscr{S}_\tau := \left(z,\, \left(\frac{1}{\beta!}\, \partial_z^\beta \overline{\Theta}_j(z,\, \tau)\right)_{1 \leq j \leq d,\, |\beta| \leq k}\right). \tag{4.4}$$

Le lien de symétrie entre ces deux applications est très simple :

$$J^k_{\bar t}\underline{\mathscr{L}}_{\bar\tau} \equiv \overline{J^k_t \mathscr{S}_\tau} \tag{4.5}$$

En d'autres termes, le diagramme suivant est commutatif :

$$\begin{tikzcd} \mathscr{M} \arrow[r, "\sigma"] \arrow[d, "J^k_\bullet \mathscr{S}_\bullet"'] & \mathscr{M} \arrow[d, "J^k_\bullet \underline{\mathscr{L}}_\bullet"] \\ \mathbb{C}^{m+N_{d,\,m,\,k}} \arrow[r, "(\overline{\bullet})"] & \mathbb{C}^{m+N_{d,\,m,\,k}} \end{tikzcd} ,$$

où $(\overline{\bullet})$ désigne l'opérateur de conjugaison complexe. Puisque ces deux applications de jets sont essentiellement équivalentes, il n'était pas restrictif de présenter dans le §1.7 les cinq conditions de non-dégénérescence **(nd1)**, **(nd2)**, **(nd3)**, **(nd4)** et **(nd5)** seulement à partir de $J^k_\tau \underline{\mathscr{L}}_t$.

4.6. Invariance biholomorphe de l'application de jets. Soit $t' = h(t)$ un changement de coordonnées holomorphes locales centré à l'origine. Soit $\mathscr{M}' := h^c(\mathscr{M})$ l'image de la complexification $\mathscr{M}$ de M par ce changement de coordonnées. Puisque h^c est inversible, la codimension de $\mathscr{M}'$ est la même que celle de $\mathscr{M}$. Soient $\xi'_j = \Theta'_j(\zeta', t')$, $j = 1, \ldots, d$, $\zeta' \in \mathbb{C}^m$, $\xi' \in \mathbb{C}^m$, $t' \in \mathbb{C}^n$, des équations complexes graphées pour $\mathscr{M}'$ dans un système de cordonnées analogue au système de coordonnées dans lequel $\mathscr{M}$ est représentée. Par hypothèse, $h_i(t) \in \mathbb{C}\{t\}$ avec $h_i(0) = 0$, pour $i = 1, \ldots, n$, et il existe une matrice $b(t, \tau)$ de taille $d \times d$ de séries entières convergentes telle que l'on a l'identité formelle vectorielle $r'\big(h(t), \overline{h}(\bar t)\big) \equiv b(t, \tau)\, r(t, \tau)$ dans $\mathbb{C}\{t, \tau\}^d$, où l'on a posé

$$r_j(t, \tau) := \xi_j - \Theta_j(\zeta, t), \qquad \text{et} \qquad r'_j(t', \tau') := \xi'_j - \Theta'_j(\zeta', t'), \tag{4.7}$$

pour $j = 1, \ldots, d$. Puisque nous scindons les coordonnées $t' = (z', w') \in \mathbb{C}^m \times \mathbb{C}^d$ et $\tau' = (\zeta', \xi') \in \mathbb{C}^m \times \mathbb{C}^d$ en deux groupes, divisons aussi les composantes du biholomorphisme h en deux groupes $h(t) := (f(t), g(t)) \in \mathbb{C}\{t\}^m \times \mathbb{C}\{t\}^d$. En remplaçant ξ par $\Theta(\zeta, t)$ dans l'identité fondamentale $r'\big(h(t), \overline{h}(\bar t)\big) \equiv b(t, \tau)\, r(t, \tau)$, le membre de droite s'annule identiquement et nous obtenons les d identités formelles suivantes, valables dans $\mathbb{C}\{\zeta, t\}$ et qui seront notre point de départ

$$\overline{g}_j(\zeta, \Theta(\zeta, t)) \equiv \Theta'_j\big(\overline{f}(\zeta, \Theta(\zeta, t)), h(t)\big), \qquad j = 1, \ldots, d. \tag{4.8}$$

En différentiant ces identités une infinité de fois par rapport à $\zeta \in \mathbb{C}^m$, nous allons établir les relations suivantes, dont l'apparence technique ne doit pas cacher qu'elles ont une signification géométrique cruciale que nous expliquons ci-après.

Lemme 4.9. Pour tout $j = 1, \ldots, d$ et tout $\beta \in \mathbb{N}^m$, il existe une application rationnelle $Q_{j,\beta}$ dont l'expression explicite, qui ne dépend ni de $\mathscr{M}$, ni de h, ni de $\mathscr{M}'$, peut être calculée grâce à des formules combinatoires universelles[6], telle que l'on a les identités formelles suivantes, valables dans

$\mathbb{C}\{\zeta,\, t\}$:

(4.10)

$$\begin{cases} \dfrac{1}{\beta!}\,\dfrac{\partial^{|\beta|}\Theta'_j}{\partial(\zeta')^\beta}\,\big(\overline{f}(\zeta,\,\Theta(\zeta,\,t)),\; h(t)\big) \equiv \\ \qquad \equiv Q_{j,\,\beta}\Big(\Big(\partial_\zeta^{\beta_1}\Theta_{j_1}(\zeta,\,t)\Big)_{1\leq j_1\leq d,\,|\beta_1|\leq|\beta|},\; \big(\partial_\tau^{\alpha_1}\overline{h}_{i_1}(\zeta,\,\Theta(\zeta,\,t))\big)_{1\leq i_1\leq n,\,|\alpha_1|\leq|\beta|}\Big) \\ \qquad =: R_{j,\,\beta}\Big(\zeta,\; \Big(\partial_\zeta^{\beta_1}\Theta_{j_1}(\zeta,\,t)\Big)_{1\leq j_1\leq d,\,|\beta_1|\leq|\beta|}\Big) \\ \qquad =: q_{j,\,\beta}(\zeta,\,t), \end{cases}$$

où l'avant-dernière équation définit la série entière $R_{j,\,\beta}$ à partir de $Q_{j,\,\beta}$ par simple oubli de la dépendance en les jets de $\overline{h}$, et la dernière définit la série entière $q_{j,\,\beta}$ à partir de $Q_{j,\,\beta}$, par simple oubli de toute dépendance par rapport aux jets de Θ ou de $\overline{h}$. Ici, les séries entières $Q_{j,\,\beta}$ sont holomorphes au voisinage du jet constant obtenu en posant $(\zeta,\,t)=(0,\,0)$, *i.e.* $\Big((\partial_\zeta^{\beta_1}\Theta_{j_1}(0,\,0))_{1\leq j_1\leq d,\,|\beta_1|\leq|\beta|},\; (\partial_\tau^{\alpha_1}\overline{h}_{i_1}(0,\,0))_{1\leq i_1\leq n,\,|\alpha_1|\leq|\beta|}\Big)$. Des relations symétriques analogues sont satisfaites en remplaçant Θ, Θ', ζ, t, $\overline{f}$, h par $\overline{\Theta}$, $\overline{\Theta}'$, z, τ f, $\overline{h}$.

L'existence des séries entières $R_{j,\,\beta}$ exprime que l'application (4.3) des jets d'ordre k des sous-variétés de Segre complexifiées conjuguées est invariante par biholomorphisme, c'est-à-dire que le diagramme suivant est commutatif :

$$\begin{tikzcd} \mathscr{M} \arrow[r, "h"] \arrow[d, "J^k_\bullet\underline{\mathscr{L}}_\bullet"'] & \mathscr{M}' \arrow[d, "J^k_\bullet\underline{\mathscr{L}}'_\bullet"] \\ \mathbb{C}^{m+N_{d,\,m,\,k}} \arrow[r, "R^k(h)"] & \mathbb{C}^{m+N_{d,\,m,\,k}} \end{tikzcd},$$

où l'application $R^k(h)$, qui dépend de h, est définie par ses composantes $R_{j,\,\beta}$ pour $j=1,\,\ldots,\,d$ et $|\beta|\leq k$. Comme h est inversible, on vérifie que la transformation associée $R^k(h)$ est elle aussi un biholomorphisme local. Grâce à l'inversibilité de $R^k(h)$, on démontre sans difficulté que les cinq conditions de non-dégénérescence **(nd1)**, **(nd2)**, **(nd3)**, **(nd4)** et **(nd5)** introduites dans le §1.7 sont invariantes par biholomorphisme local (*voir* le Chapitre 3 de [Me2003] pour les détails).

Proof. Nous allons différentier les équations (4.8) par rapport à ζ_k, pour $k=1,\,\ldots,\,m$. Rappelons ici les expressions explicites des champs de

[6]Mais le travail d'explicitation complète serait particulièrement fastidieux, car quatre ingrédients se combineraient ensemble dans le calcul : la formule généralisée de Faà di Bruno pour la différentiation de fonctions de plusieurs variables composées ; le développement formel des dérivations composées $(\underline{\mathscr{L}}_1)^{\beta_1}(\underline{\mathscr{L}}_2)^{\beta_2}\cdots(\underline{\mathscr{L}}_m)^{\beta_m}$, où $(\beta_1,\,\beta_2,\,\ldots,\,\beta_m)\in\mathbb{N}^m$; la formule universelle pour les dérivations partielles d'ordre quelconque d'un quotient de deux séries entières ; les déterminants de Cramer. Heureusement, nous n'aurons pas besoin ici d'une formule explicite pour les séries entières analytiques $Q_{j,\,\beta}$.

vecteurs CR de type $(0,\,1)$ complexifiés $\underline{\mathscr{L}}_k$ définis précédemment :

$$\underline{\mathscr{L}}_k = \frac{\partial}{\partial \zeta_k} + \sum_{j=1}^{d} \frac{\partial \Theta_j}{\partial \zeta_k}(\zeta,\,t)\,\frac{\partial}{\partial \xi_j}, \tag{4.11}$$

pour $k = 1,\,\ldots,\,m$. On voit immédiatement que le fait de différenter une série entière composée $\psi(\zeta,\,\xi)|_{\xi=\Theta(\zeta,t)} = \psi(\zeta,\,\Theta(\zeta,\,t))$ par rapport à ζ_k équivaut à lui appliquer le champ de vecteurs $\underline{\mathscr{L}}_k$, entendu comme dérivation, c'est-à-dire que l'on a :

$$\frac{\partial}{\partial \zeta_k}\,\psi(\zeta,\,\Theta(\zeta,\,t)) \equiv \left[\underline{\mathscr{L}}_k \psi\right](\zeta,\,\Theta(\zeta,\,t)). \tag{4.12}$$

Cette observation est triviale, mais elle a son importance ; géométriquement parlant, appliquer l'opérateur $\underline{\mathscr{L}}_k$ signifie que l'on différentie le long de la sous-variété de Segre complexifiée conjugué $\underline{\mathscr{S}}_t$, le tout étant paramétré par t.

Ainsi, en différentiant les relations (4.8) par rapport à ζ_k et en utilisant la formule de dérivation composée, on obtient les relations

$$\underline{\mathscr{L}}_k \overline{g}_j(\zeta,\,\Theta(\zeta,\,t)) \equiv \sum_{l=1}^{m} \underline{\mathscr{L}}_k \overline{f}_l(\zeta,\,\Theta(\zeta,\,t))\,\frac{\partial \Theta'_j}{\partial \zeta'_l}\left(\overline{f}(\zeta,\,\Theta(\zeta,\,t)),\,h(t)\right), \tag{4.13}$$

pour $k = 1,\,\ldots,\,m$ et $j = 1,\,\ldots,\,d$.

Par ailleurs, en posant $t = 0$ dans (4.8), on obtient

$$\overline{g}_j(\zeta,\,\Theta(\zeta,\,0)) \equiv \Theta'_j\left(\overline{f}(\zeta,\,\Theta(\zeta,\,0)),\,0\right). \tag{4.14}$$

Ces identités expriment que la restriction de $h^c = (h,\,\overline{h})$ à la sous-variété de Segre complexifiée conjuguée $\underline{\mathscr{S}}_0 = \{(0,\,0,\,\zeta,\,\Theta(\zeta,\,0)) \,:\, \zeta \in \mathbb{C}^m\}$, qui est de dimension complexe m, est à valeurs dans la sous-variété de Segre complexifiée conjuguée $\underline{\mathscr{S}}'_0 = \{(0,\,0,\,\zeta',\,\Theta'(\zeta',\,0)) \,:\, \zeta' \in \mathbb{C}^m\}$, qui est de même dimension. Puisque h^c est un biholomorphisme, cette restriction est forcément inversible, c'est-à-dire que l'application $\zeta \mapsto \overline{h}(\zeta,\,\Theta(\zeta,\,0))$ est de rang m en $\zeta = 0$. Autrement dit, la matrice (constante) des dérivées partielle à l'origine $\left(\underline{\mathscr{L}}_k\,\overline{h}_i(0)\right)_{1\leq i\leq n}^{1\leq k\leq m}$ est de rang m. Mais à cause des relations (4.13), prises en $t = 0$, les d dernières lignes de la matrice $\left(\underline{\mathscr{L}}_k\,\overline{h}_i(0)\right)_{1\leq i\leq n}^{1\leq k\leq m}$ sont des combinaisons linéaires à coefficients constants de ses m premières lignes. Il en découle finalement que le déterminant suivant de taille $m \times m$ ne s'annule pas :

$$\det\,\left(\underline{\mathscr{L}}_{k_1}\overline{f}_{k_2}(0)\right)_{1\leq k_1,\,k_2\leq m} \neq 0. \tag{4.15}$$

Par conséquent, nous pouvons diviser par le déterminant

$$\mathscr{D}(\zeta,\,t) := \det\,\left(\underline{\mathscr{L}}_{k_1}\overline{f}_{k_2}(\zeta,\,\Theta(\zeta,\,t))\right)_{1\leq k_1,\,k_2\leq m}, \tag{4.16}$$

pourvu que $\zeta \in \mathbb{C}^m$ et $t \in \mathbb{C}^n$ soient suffisamment petits pour qu'il ne s'annule pas.

Maintenant, envisageons les équations (4.13) à j fixé comme un système linéaire non homogène dont les inconnues sont les m dérivées partielles $\partial\Theta'_j/\partial\zeta'_1, \ldots, \partial\Theta'_j/\partial\zeta'_m$. Grâce aux formules de Cramer, nous pouvons résoudre ce système, ce qui donne des expressions de la forme
(4.17)

$$\frac{\partial\Theta'_j}{\partial\zeta'_k}\big(\overline{f}(\zeta,\,\Theta(\zeta,\,t)),\,h(t)\big) \equiv \frac{T_{j,\,k}\Big(\big(\underline{\mathscr{L}}_{k'_1}\overline{h}_{i_1}(\zeta,\,\Theta(\zeta,\,t))\big)_{1\leq i_1\leq n,\,1\leq k'_1\leq m}\Big)}{\mathscr{D}(\zeta,\,t)}.$$

Ici, en examinant la forme explicite des déterminants de Cramer, on vérifie aisément que les termes $T_{j,\,k}$ sont des polynômes universels en leurs variables.

Traitons maintenant le cas $|\beta| = 2$ de (4.10). Pour un mutiindice arbitraire $\beta = (\beta_1,\,\beta_2,\,\ldots,\,\beta_m) \in \mathbb{N}^m$, nous noterons $\underline{\mathscr{L}}^\beta$ la dérivation d'ordre $|\beta|$ définie par la composition $(\underline{\mathscr{L}}_1)^{\beta_1}(\underline{\mathscr{L}}_2)^{\beta_2}\cdots(\underline{\mathscr{L}}_m)^{\beta_m}$.

Différentions à nouveau les identités (4.13) par rapport aux variables ζ_k. Nous obtenons à nouveau des systèmes de Cramer de même déterminant $\mathscr{D}(\zeta,\,t)$ que l'on peut résoudre. Aussi, pour toute paire d'entiers $(k_1,\,k_2)$ avec $1 \leq k_1,\,k_2 \leq m$ et pour tout $j = 1,\,\ldots,\,d$, il existe des polynômes universels $T_{j,\,k_1,\,k_2}$ tels que l'on peut écrire
(4.18)

$$\frac{\partial^2\Theta'_j}{\partial\zeta'_{k_1}\partial\zeta'_{k_2}}\big(\overline{f}(\zeta,\,\Theta(\zeta,\,t)),\,h(t)\big) \equiv \frac{T_{j,\,k_1,\,k_2}\Big(\big(\underline{\mathscr{L}}^{\beta_1}\overline{h}_{i_1}(\zeta,\,\Theta(\zeta,\,t))\big)_{1\leq i_1\leq n,\,1\leq|\beta_1|\leq 2}\Big)}{\mathscr{D}(\zeta,\,t)^3}.$$

Le lecteur aura remarqué l'exposant 3 qui apparaît au dénominateur. On doit le comprendre comme "3"="2"+"1", où "2" provient de la différentiation du quotient $T_{j,\,k}/\mathscr{D}$ dans (4.17) et où "1" provient de la seconde application de la règle de Cramer.

Différentions successivement les relations (4.8) par rapport à $\zeta^\beta = \zeta_1^{\beta_1}\zeta_2^{\beta_2}\cdots\zeta_m^{\beta_m}$. En raisonnant par récurrence, on démontre que pour tout $\beta \in \mathbb{N}^m$ et pour tout $j = 1,\,\ldots,\,d$, il existe un polynôme $T_{j,\,\beta}$ dont l'expression explicite est complexe, mais universelle, tel que l'identité suivante est satisfaite, dans $\mathbb{C}\{\zeta,\,t\}$:
(4.19)

$$\frac{1}{\beta!}\,\frac{\partial^{|\beta|}\Theta'_j}{\partial(\zeta')^\beta}\big(\overline{f}(\zeta,\,\Theta(\zeta,\,t)),\,h(t)\big) \equiv \frac{T_{j,\,\beta}\Big(\big(\underline{\mathscr{L}}^{\beta_1}\overline{h}_{i_1}(\zeta,\,\Theta(\zeta,\,t))\big)_{1\leq i_1\leq n,\,1\leq|\beta_1|\leq|\beta|}\Big)}{[\mathscr{D}(\zeta,\,t)]^{2|\beta|-1}}.$$

À ce stade, il est important d'observer qu'en développant les dérivations multiples $\underline{\mathscr{L}}^{\beta_1}$, où $\beta_1 \in \mathbb{N}^m$ est un multiindice fixé, on obtient des opérateurs différentiels à coefficients non constants. Plus précisément, en utilisant les expressions explicites (4.11) des champs de vecteurs $\underline{\mathscr{L}}_k$, et en raisonnant par récurrence, il est aisé d'établir que les coefficients des opérateurs $\underline{\mathscr{L}}^{\beta_1}$, exprimés par rapports aux opérateurs ∂_t^α, sont des polynômes universels en les dérivées partielles $\big(\partial^{|\beta_2|}\Theta_{j_2}(\zeta,\,t)/\partial\zeta^{\beta_2}\big)_{1\leq j_2\leq d,\,1\leq|\beta_2|\leq|\beta_1|}$. Ainsi, le numérateur de (4.19) devient un polynôme universel (dont

l'expression explicite ne nous serait pas utile) en les variables
(4.20)
$$\Big(\Big(\partial_\zeta^{\beta_1}\Theta_{j_1}(\zeta,\,t)\Big)_{1\leq j_1\leq d,\,|\beta_1|\leq|\beta|},\ \big(\partial_t^{\alpha_1}\overline{h}_{i_1}(\zeta,\,\Theta(\zeta,\,t))\big)_{1\leq i_1\leq n,\,|\alpha_1|\leq|\beta|}\Big)$$

De même, en développant le déterminant qui apparaît au dénominateur, on obtient un polynôme universel en les variables (4.20), pour $|\beta_1|\leq 1$. Concluons que nous avons effectivement construit l'application rationnelle souhaitée $Q_{j,\,\beta}:=T_{j,\,\beta}/[\mathscr{D}]^{2|\beta|-1}$. $\square$

Il nous reste maintenant à établir l'invariance biholomorphe de l'application de réflexion CR formelle.

4.21. Inversion. Dans cet objectif, développons les séries entières Θ'_j par rapport aux puissances de ζ', ce qui donne $\Theta'_j\,(\zeta',\,t')\ =:\ \sum_{\beta\in\mathbb{N}^m}(\zeta')^\beta\,\Theta'_{j,\,\beta}\,(t')$, pour $j=1,\,\dots,\,d$, où les $\Theta'_{j,\,\beta}(t')$ sont des séries entières analytiques complexes. Avec ces notations, nous pouvons développer le membre de gauche de (4.10) en conservant pour membre de droite la dernière ligne de (4.10), ce qui donne :

$$\sum_{\gamma\in\mathbb{N}^m}\frac{(\beta+\gamma)!}{\beta!\,\gamma!}\,\overline{f}(\zeta,\,\Theta(\zeta,\,t))^\gamma\,\Theta'_{j,\,\beta+\gamma}(h(t))\equiv q_{j,\,\beta}(\zeta,\,t). \tag{4.22}$$

Puisque nous voulons établir l'invariance biholomorphe de l'application de réflexion, nous devrions résoudre les termes $\Theta'_{j,\,\beta}(h(t))$ qui apparaissent dans le développement de la première ligne de (4.10) par rapport aux autres termes, de telle sorte que n'apparaissent au final que des termes $\Theta_{j_1,\,\beta_1}(t)$.

Pour cela, il est utile de savoir qu'une collection infinie d'identités formelles de la forme

$$\sum_{\gamma\in\mathbb{N}^m}\frac{(\beta+\gamma)!}{\beta!\,\gamma!}\,\zeta'^\gamma\,\theta'_{j,\,\beta+\gamma}=q_{j,\,\beta}, \tag{4.23}$$

où $j=1,\,\dots,\,d$, où $\beta\in\mathbb{N}^m$, où $\zeta'\in\mathbb{C}^m$ et où les constantes $\theta'_{j,\,\beta}\in\mathbb{C}$ et $q_{j,\,\beta}\in\mathbb{C}$ sont arbitraires et indépendantes, peut être résolue formellement par rapport aux inconnues $\theta'_{j,\,\beta}$ au moyen d'une formule totalement similaire, à des différences de signe près :

$$\sum_{\gamma\in\mathbb{N}^m}(-1)^\gamma\,\frac{(\beta+\gamma)!}{\beta!\,\gamma!}\,\zeta'^\gamma\,q_{j,\,\beta+\gamma}=\theta'_{j,\,\beta}, \tag{4.24}$$

pour tout $j=1,\,\dots,\,d$ et tout $\beta\in\mathbb{N}^m$. On peut se convaincre de cette formule d'inversion de deux manières : ou bien en remplaçant l'expression (4.24) de $\theta'_{j,\,\beta}$ directement dans (4.23) et en effectuant le calcul, ou bien en raisonnant avec des séries de Taylor convergentes en deux points distincts et en extrapolant ensuite la relation obtenue aux séries formelles non convergentes.

L'application de cette formule d'inversion aux identités (4.22) nous donne les relations formelles

(4.25)
$$\begin{cases} \Theta'_{j,\,\beta}(h(t)) \equiv \displaystyle\sum_{\gamma\in\mathbb{N}^m} (-1)^\gamma \, \frac{(\beta+\gamma)!}{\beta!\,\gamma!} \, \overline{f}(\zeta,\,\Theta(\zeta,\,t))^\gamma \cdot q_{j,\,\beta+\gamma}(\zeta,\,t) \\ \qquad\qquad \equiv \displaystyle\sum_{\gamma\in\mathbb{N}^m} (-1)^\gamma \, \frac{(\beta+\gamma)!}{\beta!\,\gamma!} \, \overline{f}(\zeta,\,\Theta(\zeta,\,t))^\gamma \cdot \\ \cdot\, Q_{j,\,\beta+\gamma}\left(\left(\partial_\zeta^{\beta_1}\Theta_{j_1}(\zeta,\,t)\right)_{1\leq j_1\leq d,\,|\beta_1|\leq|\beta|+|\gamma|},\, \left(\partial_\tau^{\alpha_1}\overline{h}_{i_1}(\zeta,\,\Theta(\zeta,\,t))\right)_{1\leq i_1\leq n,\,|\alpha_1|\leq|\beta|+|\gamma|}\right). \end{cases}$$

Ici, un argument de convergence est nécessaire. Heureusement, grâce aux estimées de Cauchy pour les dérivées partielles de séries entières analytiques, il existe des constantes $\sigma' > 0$, $\rho' > 0$ et $C' > 0$ telles qu'on a une estimation de la forme

$$\left|\frac{1}{\beta!}\,\frac{\partial^{|\beta|}\Theta'_j}{\partial(\zeta')^\beta}(\zeta',\,t')\right| < C'\,(\rho')^{-|\beta|}, \tag{4.26}$$

pour tous ζ', t' satisfaisant $|\zeta'| < \sigma'$, $|t'| < \sigma'$. Soit $\sigma > 0$ une constante suffisamment petite pour que l'on ait $|h(t)| < \sigma'$ (d'où aussi $\left|\overline{h}(\tau)\right| < \sigma'$) pour tout t tel que $|t| < \sigma$. On en déduit la même estimée de Cauchy que (4.26) pour le membre de gauche de (4.10), avec les mêmes constantes $\rho' > 0$ et $C' > 0$. Ensuite, ces estimations se transfèrent immédiatement aux membres de la dernière ligne de (4.10) :

$$|q_{j,\,\beta}(\zeta,\,t)| < C'\,(\rho')^{-|\beta|}. \tag{4.27}$$

Cette dernière estimation suffit pour assurer que les formules (4.25) sont normalement convergentes lorsque $|\zeta| < \sigma$ et $|t| < \sigma$.

4.28. Formules fondamentales. Pour terminer, posons $\zeta = 0$ dans les formules (4.25), ce qui exige quelques commentaires. Notons que les termes $\Theta_j(0,\,t)$ s'identifient bien évidemment aux termes $\Theta_{j,\,\beta}(t)|_{\beta=0}$ du développement $\Theta_j(\zeta,\,t) =: \sum_{\beta\in\mathbb{N}^m} \zeta^\beta\,\Theta_{j,\,\beta}(t)$ de Θ_j par rapport aux puissances de ζ. Par conséquent, les puissances $\overline{f}(0,\,\Theta(0,\,t))^\gamma$ et les jets $\partial_\tau^{\alpha_1}\overline{h}_{i_1}(\zeta,\,\Theta(0,\,t))$ qui apparaissent dans (4.25)$|_{\zeta=0}$ sont des séries entières analytiques par rapport aux d variables $\Theta_{j_1,\,0}(t)$, pour $j_1 = 1,\,\ldots,\,d$. Au total, *les identités* (4.25)$|_{\zeta=0}$ *ne font intervenir à droite que les fonctions* $\Theta_{j_1,\,\beta_1}(t)$. Notons ici que l'indice β_1 n'est pas borné, à cause de la présence de la somme $\sum_{\gamma\in\mathbb{N}^m}$.

En conclusion, si l'on note $S_{j,\,\beta}$ ce second membre, on obtient des formules absolument fondamentales entre les composantes $\Theta'_{j,\,\beta}(t')$ attachées à l'équation de $\mathscr{M}' = h^c(\mathscr{M})$ et les composantes $\Theta_{j,\,\beta}(t)$ attachées à l'équation de $\mathscr{M}$, formules que nous écrirons :

$$\Theta'_{j,\,\beta}(h(t)) \equiv S_{j,\,\beta}\left(\{\Theta_{j_1,\,\beta_1}(t)\}_{1\leq j_1\leq d,\,\beta_1\in\mathbb{N}^m}\right). \tag{4.29}$$

Ici, $S_{j,\beta}$ est une série entière qui dépend d'une infinité de variables. Néanmoins, il ne sera pas nécessaire d'en appeler à la théorie des fonctions holomorphes d'une infinité de variables, pourvu que $S_{j,\beta}$ soit entendu comme défini par (4.25)$|_{\zeta=0}$, avec les estimées de Cauchy (4.27)$|_{\zeta=0}$.

4.30. Invariance biholomorphe de la convergence de l'application de réflexion CR formelle. Grâce aux relations (4.29), nous pouvons établir l'assertion qui fait immédiatement suite à l'énoncé du Théorème 1.23.

En effet, comme dans les hypothèses du Théorème 1.23, soit $h : (M, 0) \longrightarrow_{\mathscr{F}} (M', 0)$ une application CR formelle entre sous-variétés génériques analytiques réelles de codimension d et d' dans $\mathbb{C}^n$ et dans $\mathbb{C}^{n'}$. Soit un système de coordonnées holomorphes $(z', w') \in \mathbb{C}^{m'} \times \mathbb{C}^{d'}$ dans lequel la complexification $\mathscr{M}'$ est représentée par les équations graphées $\xi'_{j'} = \Theta'_{j'}(\zeta', t')$, $j' = 1, \ldots, d'$.

Supposons que l'application de réflexion $\mathscr{R}'_h(\tau', t) := \xi' - \sum_{\gamma' \in \mathbb{N}^{m'}} (\zeta')^{\gamma'} \Theta'_{\gamma'}(h(t))$ converge. De manière équivalente, toutes les séries formelles $\Theta'_{j',\gamma'}(h(t)) \in \mathbb{C}\{t\}$ convergent et elles satisfont une estimée de Cauchy telle que $\left|\Theta'_{j',\gamma'}(h(t))\right| < C' (\rho')^{-|\gamma'|}$, pour $|t| < \sigma$.

Soit $t'' := \phi'(t')$ un biholomorphisme local fixant l'origine qui transforme M' en $M'' := \phi'(M')$. Après une renumérotation éventuelle des coordonnées t'', on peut supposer qu'elles se scindent en $t'' = (z'', w'') \in \mathbb{C}^{m'} \times \mathbb{C}^{d'}$ de telle sorte que $T_0 M'' + \left(\{0\} \times \mathbb{C}^{d'}_{w''}\right) = T_0 \mathbb{C}^{n'}_{t''}$. Soient alors $\xi''_{j'} = \Theta''_{j'}(\zeta'', t'')$, $j' = 1, \ldots, d'$, des équations graphées pour la complexification $\mathscr{M}''$. Le but est de démontrer que l'application de réflexion transformée $\mathscr{R}''_{\phi' \circ h}(\tau'', t) := \xi'' - \Theta''(\zeta'', \phi'(h(t)))$ converge elle aussi.

Pour le vérifier, scindons aussi les composantes du changement de coordonnées comme suit : $\phi'(t') =: (\varphi'(t'), \psi'(t')) \in \mathbb{C}\{t'\}^{m'} \times \mathbb{C}\{t'\}^{d'}$. Les relations (4.29) pour la transformation ϕ' s'écrivent

$$\Theta''_{j',\gamma'}(\phi'(t')) \equiv S'_{j',\gamma'}\left(\left\{\Theta'_{j'_1,\gamma'_1}(t')\right\}_{1 \leq j'_1 \leq d', \gamma'_1 \in \mathbb{N}^{m'}}\right). \tag{4.31}$$

Remplaçons-y t' par $h(t)$, ce qui donne :

$$\Theta''_{j',\gamma'}(\phi'(h(t))) \equiv S'_{j',\gamma'}\left(\left\{\Theta'_{j'_1,\gamma'_1}(h(t))\right\}_{1 \leq j'_1 \leq d', \gamma'_1 \in \mathbb{N}^{m'}}\right). \tag{4.32}$$

Puisque les $S'_{j',\gamma'}$ sont analytiques et puisque les $\Theta'_{j'_1,\gamma'_1}(h(t))$ convergent par hypothèse, nous déduisons de (4.32) que les composantes $\Theta''_{j',\gamma'}(\phi'(h(t)))$ de l'application de réflexion $\mathscr{R}''_h(\tau'', t) := \xi'' - \Theta''(\zeta'', h(t))$ convergent. Un examen de la construction des $S_{j',\gamma'}$ montre que toutes les estimées de Cauchy nécessaires sont satisfaites. L'assertion est démontrée.

4.33. Résumé. En définitive, toutes les hypothèses du Théorème principal 1.23 et du Théorème 1.39 sont invariantes par changement de coordonnées. Sans perte de généralité, nous pourrons donc travailler avec un

système fixé de coordonnées dans lesquelles la complexification $\mathscr{M}'$ est représentée par $\xi' = \Theta'(\zeta', t')$.

§5. Convergence d'applications CR formelles finiment non-dégénérées

5.1. Préliminaire. Afin de rendre plus accessible la lecture du Théorème 1.39 **(iii)** (Section 6) et du Théorème 1.23 (Section 7), nous démontrons ici le Théorème 1.39 **(i)** (connu) en utilisant notre propre formalisme ; cette section est exclusivement consacrée à cette démonstration. Certaines observations combinatoires, qui seront réutilisées ultérieurement, apparaîtront au cours des raisonnements (*voir* par exemple le Lemme 5.4 ci-dessous). Puisqu'elles sont explicitées d'une manière parfois incomplète ou exagérément résumée dans [BER1998] et dans [BER1999a], nous les détaillerons soigneusement.

5.2. Résolution de $h(t)$ en fonction des jets de $\overline{h}(\tau)$. Soit $h^c : (\mathscr{M}, 0) \longrightarrow_{\mathscr{F}} (\mathscr{M}', 0)$ la complexification de l'application CR formelle du Théorème 1.39 **(i)**. Nous utiliserons les notations du §1.25 et du §1.33.

Rappelons que, d'après le §1.33, en appliquant les dérivation $\underline{\mathscr{L}}^\beta$ à la première ligne de (1.27), nous obtenons les identités de réflexion écrites à la première ligne de (1.31), que nous réécrivons plus précisément comme suit :

$$\underline{\mathscr{L}}^\beta \overline{g}_{j'}(\zeta, \Theta(\zeta, t)) \equiv \sum_{\gamma' \in \mathbb{N}^{m'}} \underline{\mathscr{L}}^\beta \overline{f}^\gamma(\zeta, \Theta(\zeta, t))\, \Theta'_{j', \gamma'}(h(t)), \tag{5.3}$$

pour tout $j' = 1, \ldots, d'$ et tout $\beta \in \mathbb{N}^m$. Il est nécessaire d'examiner ce que donnent les termes $\underline{\mathscr{L}}^\beta \overline{g}_{j'}$ et $\underline{\mathscr{L}}^\beta \overline{f}^\gamma$.

Les lettres β et γ (resp. β' et γ') désigneront toujours des multiindices de $\mathbb{N}^m$ (resp. de $\mathbb{N}^{m'}$) ; la lettre α désignera toujours un multiindice de $\mathbb{N}^n$. Soit $\ell \in \mathbb{N}$ un entier positif. Nous noterons $J^\ell_t h(t) := (\partial^\alpha_t h_{i'}(t))_{1 \leq i' \leq n', |\alpha| \leq \ell}$ le jet d'ordre ℓ de h et aussi $J^\ell_\tau \overline{h}(\tau) := \big(\partial^\alpha_\tau \overline{h}_{i'}(\tau)\big)_{1 \leq i' \leq n', |\alpha| \leq \ell}$ le jet d'ordre ℓ de $\overline{h}(\tau)$. Le nombre de ces dérivées partielles est égal à $N_{n', n, \ell} := n' \frac{(n+\ell)!}{n!\, \ell!}$. Nous appellerons *jet strict* de h (ou de $\overline{h}$) les dérivées partielles de h (ou de $\overline{h}$) d'ordre strictement positif.

En observant que les coefficients des champs de vecteurs $\underline{\mathscr{L}}_k$ définis à la deuxième ligne de (1.26) sont analytiques et en raisonnant par récurrence, on démontre l'assertion suivante.

Lemme 5.4. Pour tout $i' = 1, \ldots, n'$ et tout $\beta \in \mathbb{N}^m$, il existe un polynôme $P_{i', \beta}$ en le jet $J^{|\beta|}_\tau \overline{h}(\tau)$ dont les coefficients sont des séries entières convergentes par rapport aux variables (t, τ) qui ne dépendent que des séries définissantes $\Theta_j(\zeta, t)$ de $\mathscr{M}$, tel que

$$\underline{\mathscr{L}}^\beta \overline{h}_{i'}(\tau) \equiv P_{i', \beta}\left(t, \tau, J^{|\beta|}_\tau \overline{h}(\tau)\right), \tag{5.5}$$

pour $(t,\,\tau)\in\mathbb{C}^n\times\mathbb{C}^n$.

Proof. Pour $\beta=0$, l'existence de $P_{i',\,\beta}$ est évidente. Raisonnons par récurrence sur l'entier $|\beta|$, en supposant plus précisément que le premier groupe d'arguments de $P_{i',\,\beta}$ est le jet $J_\zeta^{|\beta|}\Theta(\zeta,\,t)$ par rapport à ζ de la série définissante $\Theta(\zeta,\,t)$, et en supposant que $P_{i',\,\beta}$ est un polynôme universel par rapport aux variables $\Big(J_\zeta^{|\beta|}\Theta(\zeta,\,t),\;J_\tau^{|\beta|}\overline{h}(\tau)\Big)$. Fixons $\ell\in\mathbb{N}$ et supposons les relations (5.5) vraies pour tout $\beta\in\mathbb{N}^m$ tel que $|\beta|\leq\ell$. En appliquant la dérivation $\underline{\mathscr{L}}_k$ à (5.5), et en utilisant l'hypothèse de récurrence, nous pouvons écrire :

(5.6)
$$\left\{\begin{aligned}
\underline{\mathscr{L}}_k\underline{\mathscr{L}}^\beta\overline{h}_{i'}(\tau)&\equiv\underline{\mathscr{L}}_k\Big[P_{i',\,\beta}\Big(J_\zeta^{|\beta|}\Theta(\zeta,\,t),\;J_\tau^{|\beta|}\overline{h}(\tau)\Big)\Big]\\
&\equiv\sum_{\beta_1\in\mathbb{N}^m,\,|\beta_1|\leq|\beta|}\sum_{j=1}^{d}\frac{\partial P_{i',\,\beta}}{\partial J_j^{|\beta_1|}}\cdot\partial_{\zeta_k}\partial_\zeta^{\beta_1}\Theta_j(\zeta,\,t)+\\
&\quad+\sum_{i'_1=1}^{n'}\sum_{\alpha_1\in\mathbb{N}^n,\,|\alpha_1|\leq|\beta|}\frac{\partial P_{i'_1,\,\beta}}{\partial J_{i'_1}^{\alpha_1}}\cdot\partial_{\zeta_k}\partial_\tau^{\alpha_1}\overline{h}_{i'_1}(\tau)+\\
&\quad+\sum_{i'_1=1}^{n'}\sum_{\alpha_1\in\mathbb{N}^n,\,|\alpha_1|\leq|\beta|}\sum_{j=1}^{d}\frac{\partial P_{i',\,\beta}}{\partial J_{i'_1}^{\alpha_1}}\cdot\partial_{\zeta_k}\Theta_j\cdot\partial_{\xi_j}\partial_\tau^{\alpha_1}\overline{h}_{i'_1}(\tau)\\
&=:P_{i',\,\beta+\mathbf{1}_k^m}\Big(J_\zeta^{|\beta|+1}\Theta(\zeta,\,t),\;J_\tau^{|\beta|}\overline{h}(\tau),\Big)\,,
\end{aligned}\right.$$

où le symbole $\mathbf{1}_k^m$ désigne le multiindice $(0,\,\ldots,\,0,\,1,\,0,\,\ldots,\,0)\in\mathbb{N}^m$, avec 1 à la k-ième place et 0 aux autres places. Le calcul (5.6) démontre bien que $P_{i',\,\beta+\mathbf{1}_k^m}$ est un polynôme et qu'il se déduit de $P_{i',\,\beta}$ par une formule algébrico-différentielle universelle de différentiation composée. Puisque tout multiindice de longueur $\ell+1$ peut s'écrire $\beta+\mathbf{1}_k^m$, où $|\beta|=\ell$, ceci démontre le Lemme 5.4. $\square$

Grâce à la formule de Leibniz pour la différentiation d'un produit de fonctions, on observe plus généralement qu'un développement polynomial analogue existe pour $\underline{\mathscr{L}}^\beta\overline{h}^\alpha(\tau)$, lorsque $\alpha\in\mathbb{N}^{n'}$ est un multiindice arbitraire. Nous n'aurons pas besoin de formules combinatoires explicites, que du reste, nous n'avons pas tenté d'écrire.

Grâce à ce préliminaire, en tenant compte du fait que $\tau=(\zeta,\,\Theta(\zeta,\,t))$ sur $\mathscr{M}$, nous pouvons développer les identités (5.3) comme suit :

$$R'_{j',\,\beta}\Big(\zeta,\,t,\;J_\tau^{|\beta|}\overline{h}(\zeta,\,\Theta(\zeta,\,t))\;:h(t)\Big)\equiv 0, \tag{5.7}$$

où les $R'_{j',\,\beta}\Big(\zeta,\,t,\;J_\tau^{|\beta|}\overline{h}:t'\Big)$ sont des séries entières convergentes, relativement polynomiales par rapport au jet strict de $\overline{h}$. Le dernier argument t' est placé après un signe «:» pour bien notifier que dans (5.3), ce sont les composantes de $\overline{h}$ que l'on dérive en appliquant les opérateurs $\underline{\mathscr{L}}^\beta$, tandis que les composantes de h ne sont pas différentiées.

En revenant à la définition (1.34) des applications $\Psi'_{j',\beta}$ introduites dans le §1.33, nous avons la coïncidence de notations :

$$\Psi'_{j',\beta}(0,\,0,\,t') \equiv R'_{j',\beta}\big(0,\,0,\,J_\tau^{|\beta|}\overline{h}(0)\,:t'\big)\,. \tag{5.8}$$

D'après l'hypothèse principale du Théorème 1.39 **(i)**, pour k assez grand, l'application $t' \longmapsto \big(\Psi'_{j',\beta}(0,\,0,\,t')\big)_{1\leq j'\leq d',\,|\beta|\leq k}$ est de rang n' en $t'=0$. Nous noterons ℓ_0 un tel entier k. De manière équivalente, l'application holomorphe locale

$$t' \longmapsto \big(R'_{j',\beta}\big(0,\,0,\,J_\tau^{|\beta|}\overline{h}(0)\,:t'\big)\big)_{1\leq j'\leq d',\,|\beta|\leq \ell_0} \tag{5.9}$$

est de rang n' en $t'=0$.

Grâce à cette hypothèse forte, nous pouvons appliquer le théorème des fonctions implicites aux identités (5.7), écrites seulement pour $|\beta|\leq \ell_0$, afin de résoudre $h(t)$ en fonction des autres variables, ce qui donne une expression de la forme

$$h(t) \equiv \Phi\big(\zeta,\,t,\,J_\tau^{\ell_0}\overline{h}(\zeta,\,\Theta(\zeta,\,t))\big)\,, \tag{5.10}$$

où l'application Φ est à valeurs dans $\mathbb{C}^{n'}$, et holomorphe au voisinage de $\big(0,\,0,\,J_\tau^{\ell_0}\overline{h}(0)\big)$ dans $\mathbb{C}^{m+n+N_{n',\,n,\,\ell_0,}}$.

En admettant un léger écart de notation, nous réécrirons l'identité (5.10) sous la forme

$$h(t) = \Phi\big(t,\,\tau,\,J_\tau^{\ell_0}\overline{h}(\tau)\big)\,, \tag{5.11}$$

étant entendu que $(t,\,\tau)\in\mathscr{M}$, c'est-à-dire que ξ doit être remplacé par $\Theta(\zeta,\,t)$ si l'on veut interpréter (5.11) comme une véritable identité formelle dans $\mathbb{C}[\![\zeta,\,t]\!]^{n'}$.

En partant des identités de réflexion écrites à la deuxième ligne de (1.32) et en raisonnant comme ci-dessus, on démontre que $\overline{h}(\tau)$ satisfait l'identité suivante sur $\mathscr{M}$:

$$\overline{h}(\tau) = \overline{\Phi}\big(\tau,\,t,\,J_t^{\ell_0}h(t)\big)\,, \tag{5.12}$$

Pour se convaincre que c'est bien l'application conjuguée $\overline{\Phi}$ qui apparaît dans (5.12), on peut aussi poser $\tau := \bar{t}$ dans (5.11), conjuguer de part et d'autre du signe «=», puis complexifier la variable $(\bar{t})^c =: \tau$ dans l'identité obtenue, ce qui donne (5.12).

En résumé, nous avons obtenu un couple d'identités formelles, valables pour $(t,\,\tau)\in\mathscr{M}$:

$$\begin{cases} h(t) &= \Phi\big(t,\,\tau,\,J_\tau^{\ell_0}\overline{h}(\tau)\big)\,,\\ \overline{h}(\tau) &= \overline{\Phi}\big(\tau,\,t,\,J_t^{\ell_0}h(t)\big)\,. \end{cases} \tag{5.13}$$

Soit $\Pi(t,\,\tau)\in\mathbb{C}[\![t,\,\tau]\!]$ une série formelle sans terme constant, par exemple $h_{i'}(t)-\Phi_{i'}\big(t,\,\tau,\,J_\tau^{\ell_0}\overline{h}(\tau)\big)$, où i' est fixé. Quand nous disons que $\Pi(t,\,\tau)=0$ pour $(t,\,\tau)\in\mathscr{M}$, nous entendons que l'on a les deux identités formelles $\Pi(t,\,\zeta,\,\Theta(\zeta,\,t))\equiv 0$ dans $\mathbb{C}[\![\zeta,\,t]\!]$ et $\Pi(z,\,\overline{\Theta}(z,\,\tau),\,\tau)\equiv 0$ dans $\mathbb{C}[\![z,\,\tau]\!]$. De manière élémentaire, on vérifie qu'en posant $r(t,\,\tau) := \xi-\Theta(\zeta,\,t)$

et $\overline{r}(\tau,\, t) \,:=\, w - \overline{\Theta}(z,\, \tau)$, ces identités sont équivalentes entre elles et qu'elles sont équivalentes à la propriété suivante : il existe deux matrices de séries formelles $c(t,\, \tau)$ et $d(t,\, \tau)$ de taille $1 \times d$ telles que $\Pi(t,\, \tau) \equiv c(t,\, \tau)\, r(t,\, \tau)$ et $\Pi(t,\, \tau) \equiv d(t,\, \tau)\, \overline{r}(\tau,\, t)$ dans $\mathbb{C}[\![t,\, \tau]\!]$. Retenons donc que l'expression $\Pi(t,\, \tau) = 0$ pour $(t,\, \tau) \in \mathscr{M}$ signifie rigoureusement que $\Pi(t,\, \zeta,\, \Theta(\zeta,\, t)) \equiv 0$ ou que $\Pi(z,\, \overline{\Theta}(z,\, \tau),\, \tau) \equiv 0$.

Le couple d'identités (5.13) est absolument fondamental : il signifie que $h(t)$ (resp. $\overline{h}(\tau)$) peut être résolu par rapport au jet d'ordre ℓ_0 de $\overline{h}(\tau)$ (resp. de $h(t)$) et que cette résolution est *analytique* (puisque Φ l'est), bien que $h(t)$, $\overline{h}(\tau)$ et leurs jets soient, par hypothèse, des applications *formelles* qui sont *a priori* non convergentes. Ces identités ne permettent pas encore de démontrer que $h(t)$ et $\overline{h}(\tau)$ convergent : en effet, les variables t et τ sont encore mêlées dans (5.13), et les deux termes $J_\tau^{\ell_0}\overline{h}(\tau)$, $J_t^{\ell_0} h(t)$ sont *a priori* non convergents. Mais dans le reste de cette section, en «démélangeant» les variables t et τ, nous allons établir l'énoncé suivant, qui complètera la démonstration du Théorème 1.39 **(i)**.

Assertion 5.14. En supposant $\mathscr{M}$ minimale à l'origine, le couple d'identités (5.13) implique que $h(t) \in \mathbb{C}\{t\}^{n'}$ et que $\overline{h}(\tau) \in \mathbb{C}\{\tau\}^{n'}$ convergent.

5.15. Passage aux jets d'ordre quelconque. Notre premier objectif est de généraliser (5.13) en faisant apparaître, à la place des membres de gauche $h(t)$ et $\overline{h}(\tau)$, des jets d'ordre arbitraires $J_t^\ell h(t)$ et $J_\tau^\ell \overline{h}(\tau)$, où $\ell \in \mathbb{N}$. Nous verrons ci-après pourquoi cela est nécessaire.

Pour cela, introduisons les champs de vecteurs Υ_j, $j = 1,\, \ldots,\, d$, et $\underline{\Upsilon}_j$, $j = 1,\, \ldots,\, d$, définis comme suit :

(5.16)
$$\Upsilon_j := \frac{\partial}{\partial w_j} + \sum_{l=1}^{d} \frac{\partial \Theta_l}{\partial w_j}(\zeta,\, t)\, \frac{\partial}{\partial \xi_l}\,; \qquad \underline{\Upsilon}_j := \frac{\partial}{\partial \xi_j} + \sum_{l=1}^{d} \frac{\partial \overline{\Theta}_l}{\partial \xi_j}(z,\, \tau)\, \frac{\partial}{\partial w_l}.$$

Ces champs de vecteurs sont tangents à $\mathscr{M}$: en effet, on vérifie immédiatement que $\Upsilon_{j_1}\left[\xi_{j_2} - \Theta_{j_2}(\zeta,\, t)\right] \equiv 0$ et que $\underline{\Upsilon}_{j_1}\left[w_{j_2} - \overline{\Theta}_{j_2}(z,\, \tau)\right] \equiv 0$, pour $j_1,\, j_2 = 1,\, \ldots,\, d$. Observons que la collection des $2m + d$ champs de vecteurs $\mathscr{L}_k$, $\underline{\mathscr{L}}_k$ et Υ_j engendre le fibré tangent $T\mathscr{M}$. La même propriété est satisfaite par la collection $\mathscr{L}_k$, $\underline{\mathscr{L}}_k$ et $\underline{\Upsilon}_j$. Notons au passage des relations de commutation que nous n'utiliserons pas : $[\Upsilon_j,\, \underline{\mathscr{L}}_k] = 0$ et $\left[\underline{\Upsilon}_j,\, \mathscr{L}_k\right] = 0$. Considérons l'action sur $h(t)$ des champ de vecteurs Υ_j, interprétés comme dérivations. Soit $\delta = (\delta_1,\, \ldots,\, \delta_d) \in \mathbb{N}^d$ un multiindice arbitraire. Notons Υ^δ la dérivation composée $(\Upsilon_1)^{\delta_1}(\Upsilon_2)^{\delta_2} \cdots (\Upsilon_d)^{\delta_d}$, qui est d'ordre $|\delta|$. On observe immédiatement que

$$\Upsilon^\delta h(t) \equiv \partial_w^\delta h(t). \tag{5.17}$$

De manière similaire, $\underline{\Upsilon}^\delta \overline{h}(\tau) \equiv \partial_\xi^\delta \overline{h}(\tau)$.

En procédant comme dans la démonstration du Lemme 5.4, on vérifie que pour tout $i' = 1,\, \ldots,\, n'$ et tout multiindice $\alpha = (\beta,\, \delta) \in \mathbb{N}^m \times \mathbb{N}^d$, il

existe des séries entières $Q_{i',\beta,\delta}$ telles que

$$\mathscr{L}^\beta \Upsilon^\delta h_{i'}(t) \equiv Q_{i',\beta,\delta}\left(t,\, \tau,\, J_t^{|\beta|+|\delta|} h_{i'_1}(t)\right). \tag{5.18}$$

Ces séries sont polynomiales par rapport aux variables de jets et possèdent des coefficients analytiques par rapport à $(t,\, \tau)$, lesquels coefficients ne dépendent que des séries définissantes $\Theta_j(\zeta,\, t)$ de $\mathscr{M}$.

Réciproquement, puisque les n champs de vecteurs $\mathscr{L}_k$ et Υ_j engendrent l'espace des $(t_1,\, \ldots,\, t_n)$, nous pouvons inverser les formules $\mathscr{L}^\beta \Upsilon^\delta h_{i'}(t) \equiv Q_{i',\beta,\delta}$, en considérant les dérivées partielles $\partial_t^{\alpha_1} h_{i'_1}(t)$ comme inconnues. En examinant les termes de plus haute dérivation dans les polynômes $Q_{i',\beta,\delta}$, on constate que le système linéaire que l'on doit inverser est de type trigonal, et de déterminant 1 : l'inversion est élémentaire et conserve la polynomialité. On en déduit :

Lemme 5.19. Pour tout $i' = 1,\, \ldots,\, n'$ et tout multiindice $\alpha = (\beta,\, \delta) \in \mathbb{N}^m \times \mathbb{N}^d$, il existe une série entière $P_{i',\alpha}$, polynomiale par rapport à son dernier groupe de variables, dont les coefficients sont des séries entières convergentes par rapport à $(t,\, \tau)$ qui ne dépendent que des séries définissantes $\Theta_j(\zeta,\, t)$ de $\mathscr{M}$, tel que l'identité suivante est satisfaite dans $\mathbb{C}[\![t]\!]$:

$$\partial_t^\alpha h_{i'}(t) \equiv P_{i',\alpha}\left(t,\, \tau,\, \left(\mathscr{L}^{\beta_1} \Upsilon^{\delta_1} h(t)\right)_{|\beta_1| \leq |\beta|,\, |\delta_1| \leq |\delta|}\right), \tag{5.20}$$

lorsque $(t,\, \tau) \in \mathbb{C}^n \times \mathbb{C}^n$.

Appliquons maintenant la dérivation $\mathscr{L}^\beta \Upsilon^\delta$ à la première ligne de (5.12) et la dérivation $\underline{\mathscr{L}}^\beta \underline{\Upsilon}^\delta$ à la seconde ligne de (5.12) : cela est autorisé, puisque les champs de vecteurs $\mathscr{L}_k$, $\underline{\mathscr{L}}_k$, Υ_j et $\underline{\Upsilon}_j$ sont tangents à $\mathscr{M}$. Comme les coefficients de ces dérivations sont analytiques, en utilisant la «règle de la chaîne» pour différentier les membres de droite Φ et $\overline{\Phi}$ de (5.12), nous voyons apparaître des expressions polynomiales par rapport aux variables de jets stricts, dont les coefficients sont analytiques par rapport aux variables $(t,\, \tau) \in \mathscr{M}$. L'ordre de ces variables de jets monte jusqu'à $\ell_0 + |\beta| + |\delta|$. En appliquant le Lemme 5.19, nous pouvons effectuer des substitutions linéaires sur les identités obtenues afin de résoudre les dérivées partielles $\partial_t^\alpha h_{i'}(t)$, ce qui donne des identités de la forme $\partial_t^\alpha h_{i'}(t) \equiv \Phi_{i',\alpha}\left(t,\, \zeta,\, \Theta(\zeta,\, t),\, J_\tau^{\ell_0+|\beta|+|\delta|} \overline{h}(\zeta,\, \Theta(\zeta,\, t))\right)$.

Soit $\ell \in \mathbb{N}$ un entier arbitraire. Collectons les identités obtenues pour tous les multiindices α satisfaisant $|\alpha| \leq \ell$ et résumons les calculs effectués.

Lemme 5.21. Pour tout entier $\ell \in \mathbb{N}$, il existe une série entière $\Phi_\ell = \Phi_\ell\left(t,\, \tau,\, J^{\ell_0+\ell}\right)$ à valeurs dans $\mathbb{C}^{N_{n',n,\ell}}$, polynomiale par rapport aux variables de jets stricts, dont les coefficients sont des séries entières convergentes par rapport à $(t,\, \tau)$ qui ne dépendent que des séries définissantes $\Theta_j(\zeta,\, t)$ de $\mathscr{M}$, telle que les deux identités suivantes sont satisfaites :

$$\left\{\begin{array}{ll} J_t^\ell h(t) & \equiv \Phi_\ell\left(t,\, \zeta,\, \Theta(\zeta,\, t),\, J_\tau^{\ell_0+\ell} \overline{h}(\zeta,\, \Theta(\zeta,\, t))\right) \quad \text{et} \\ J_\tau^\ell \overline{h}(\tau) & \equiv \overline{\Phi}_\ell\left(\tau,\, z,\, \overline{\Theta}(z,\, \tau),\, J_t^{\ell_0+\ell} h(z,\, \overline{\Theta}(z,\, \tau))\right), \end{array}\right. \tag{5.22}$$

dans $\mathbb{C}[\![\zeta,\, t]\!]^{N_{n',\,n,\,\ell}}$ et dans $\mathbb{C}[\![z,\, \tau]\!]^{N_{n',\,n,\,\ell}}$.

Ces formules constituent la généralisation désirée de (5.12). Elles seront notre nouveau point de départ.

La deuxième étape cruciale dans la démonstration de l'assertion 5.13 va consister à effectuer un grand nombre d'«auto-substitutions» entre ces formules, en se «déplaçant» le long des chaînes de Segre (conjuguées). Par souci de clarté et compréhensibilité, commençons par détailler les deux premières étapes.

5.23. Restrictions à la première et à la deuxième chaîne de Segre conjuguée. Rappelons que $h^c(t,\, \tau) = \big(h(t),\, \overline{h}(\tau)\big)$. Nous admettrons l'abus de notation suivant : au lieu d'écrire rigoureusement $h\,(\pi_t(t,\, \tau))$ et $\overline{h}\,(\pi_\tau(t,\, \tau))$, nous écrirons $h(t,\, \tau) = h(t)$ et $\overline{h}(t,\, \tau) = \overline{h}(\tau)$.

Soit $\nu \in \mathbb{N}$, $\nu \geq 1$, soit $\mathsf{x} \in \mathbb{C}^\nu$ et soit $\mathsf{Q}(\mathsf{x}) = (\mathsf{Q}_1(\mathsf{x}),\, \ldots,\, \mathsf{Q}_{2n}(\mathsf{x})) \in \mathbb{C}[\![\mathsf{x}]\!]^{2n}$ une application formelle quelconque satisfaisant $\mathsf{Q}(0) = 0$. Puisque le flot multiple de $\mathscr{L}$ défini par (3.13) n'agit pas sur les variables τ et que le flot multiple de $\underline{\mathscr{L}}$ défini par (3.14) n'agit pas sur les variables t, nous avons deux relations simples :

$$\text{(5.24)} \qquad \begin{cases} J_t^\ell h\left(\underline{\mathscr{L}}_{z_1}\left(\mathsf{Q}(\mathsf{x})\right)\right) \equiv J_t^\ell h\left(\mathsf{Q}(\mathsf{x})\right) & \text{et} \\ J_\tau^\ell \overline{h}\left(\mathscr{L}_{z_1}\left(\mathsf{Q}(\mathsf{x})\right)\right) \equiv J_\tau^\ell \overline{h}\left(\mathsf{Q}(\mathsf{x})\right). \end{cases}$$

Pour généraliser ces observations, rappelons que lorsque k est impair, la k-ième chaîne de Segre conjuguée $\underline{\Gamma}_k$ commence à gauche par le multiflot $\underline{\mathscr{L}}_{z_k}(\cdots)$; de même, lorsque k est pair, elle commence à gauche par le multiflot $\mathscr{L}_{z_k}(\cdots)$. Nous déduisons alors de (5.24) deux relations triviales, mais absolument cruciales :

$$\text{(5.25)} \qquad \begin{cases} J_t^\ell h\left(\underline{\Gamma}_k\left(z_{(k)}\right)\right) \equiv J_t^\ell h\left(\underline{\Gamma}_{k-1}\left(z_{(k-1)}\right)\right), & \text{si } k \text{ est impair ;} \\ J_\tau^\ell \overline{h}\left(\underline{\Gamma}_k\left(z_{(k)}\right)\right) \equiv J_\tau^\ell \overline{h}\left(\underline{\Gamma}_{k-1}\left(z_{(k-1)}\right)\right), & \text{si } k \text{ est pair.} \end{cases}$$

Des relations similaires sont satisfaites avec la chaîne de Segre Γ_k.

Restreignons maintenant les relations (5.22) à la première chaîne de Segre conjuguée, c'est-à-dire remplaçons $(t,\, \tau)$ par $\underline{\Gamma}_1\left(z_{(1)}\right)$. En tenant compte de (5.24), nous obtenons :

$$\text{(5.26)} \qquad \begin{cases} J_t^\ell h\,(0) \equiv \Phi_\ell\left(\underline{\Gamma}_1(z_1),\; J_\tau^{\ell_0+\ell}\overline{h}\left(\underline{\Gamma}_1(z_1)\right)\right) & \text{et} \\ J_\tau^\ell \overline{h}\left(\underline{\Gamma}_1(z_1)\right) \equiv \overline{\Phi}_\ell\left(\underline{\Gamma}_1(z_1),\; J_t^{\ell_0+\ell} h(0)\right). \end{cases}$$

La première relation ne sera pas utile ; interprétons la seconde : *puique le jet $J_t^\ell h(0)$ est constant et puisque $\overline{\Phi}_\ell$ est analytique, le membre de droite converge par rapport à la variable $z_1 \in \mathbb{C}^m$* ; par conséquent, le membre de gauche est convergent par rapport à z_1, ce qui signifie que *la restriction à la première chaîne de Segre conjuguée du jet d'ordre quelconque $J_\tau^\ell \overline{h}$ converge*.

Passons maintenant à la deuxième chaîne de Segre conjuguée. Remplaçons $(t,\, \tau)$ par $\underline{\Gamma}_2(z_{(2)}) = \underline{\Gamma}_2(z_1,\, z_2)$ dans (5.22). En tenant compte

de (5.24), nous obtenons :

$$(5.27)\qquad \begin{cases} J_t^\ell h\left(\underline{\Gamma}_2(z_{(2)})\right) \equiv \Phi_\ell\left(\underline{\Gamma}_2(z_{(2)}),\ J_\tau^{\ell_0+\ell}\overline{h}\left(\underline{\Gamma}_1(z_1)\right)\right) & \text{et} \\ J_\tau^\ell \overline{h}\left(\underline{\Gamma}_1(z_1)\right) \equiv \overline{\Phi}_\ell\left(\underline{\Gamma}_2(z_{(2)}),\ J_t^\ell h\left(\underline{\Gamma}_2(z_{(2)})\right)\right). \end{cases}$$

La seconde relation ne sera pas utile. Quant à la première, on voit tout de suite qu'il faut y remplacer le terme $J_\tau^{\ell_0+\ell}\overline{h}\left(\underline{\Gamma}_1(z_1)\right)$ par l'expression que nous venons d'obtenir dans (5.26), sans oublier de remplacer ℓ par $\ell_0+\ell$, ce qui nous donne :

$$(5.28)\qquad \begin{cases} J_t^\ell h\left(\underline{\Gamma}_2(z_{(2)})\right) \equiv \Phi_\ell\left(\underline{\Gamma}_2(z_{(2)}),\ J_\tau^{\ell_0+\ell}\overline{h}\left(\underline{\Gamma}_1(z_1)\right)\right) \\ \qquad\qquad\qquad \equiv \Phi_\ell\left(\underline{\Gamma}_2(z_{(2)}),\ \overline{\Phi}_{\ell_0+\ell}\left(\underline{\Gamma}_1(z_1),\ J_t^{2\ell_0+\ell}h(0)\right)\right) \\ \qquad\qquad\qquad =: \Pi_{\ell,\,2}\left(z_{(2)},\ J_t^{2\ell_0+\ell}h(0)\right). \end{cases}$$

Pour pouvoir effectuer une telle substitution, il était important de formuler à l'avance les identités (5.22) qui généralisent aux jets d'ordre quelconque les identités (5.12). Interprétons maintenant le résultat : l'expression de la seconde ligne de (5.28) est convergente, puisque Φ_ℓ et $\overline{\Phi}_{\ell_0+\ell}$ sont analytiques et puisque le jet $J_t^{2\ell_0+\ell}h(0)$ de l'application formelle h est constant. On en déduit que *la restriction à la seconde chaîne de Segre conjuguée du jet d'ordre quelconque $J_t^\ell h$ converge*.

Le lecteur aura deviné qu'en poursuivant ces substitutions le long des chaînes de Segre conjuguées de longueur arbitraire, nous pourrons conclure la démonstration de l'assertion 5.13, grâce au Lemme 3.32. Écrivons donc la démonstration finale.

5.29. Substitutions sur les chaînes de Segre conjuguées de longueur arbitraire. L'assertion suivante généralise les substitutions précédentes.

Lemme 5.30. Pour tout entier $k \in \mathbb{N}$ et tout entier $\ell \in \mathbb{N}$, il existe une série formelle $\Pi_{\ell,\,k} = \Pi_{\ell,\,k}\left(z_{(k)},\ J^{k\ell_0+\ell}\right)$ à valeurs dans $\mathbb{C}^{N_{n',\,n,\,\ell}}$, polynomiale par rapport aux variables de jets stricts, dont les coefficients sont des séries entières convergentes par rapport à $z_{(k)}$ qui ne dépendent que des séries définissantes $\Theta_j(\zeta,\,t)$ de $\mathscr{M}$, telle que les deux identités formelles suivantes :

(5.31)
$$\begin{cases} J_\tau^\ell \overline{h}\left(\underline{\Gamma}_k(z_{(k)})\right) \equiv \overline{\Pi}_{\ell,\,k}\left(z_{(k)},\ J_t^{k\ell_0+\ell}h(0)\right), & \text{si } k \text{ est impair ;} \\ J_t h\left(\underline{\Gamma}_k(z_{(k)})\right) \equiv \Pi_{\ell,\,k}\left(z_{(k)},\ J_t^{k\ell_0+\ell}h(0)\right) & \text{si } k \text{ est pair,} \end{cases}$$

sont satisfaites dans $\mathbb{C}[\![z_{(k)}]\!]^{N_{n',\,n,\,\ell}}$.

Ce lemme nous permet de conclure la démonstration de l'assertion 5.13, et par là-même celle du Théorème 1.39 **(iii)**. En effet, en posant $\ell = 0$ dans la seconde identité (5.31), grâce à la convergence de $\Pi_{0,\,k}$, l'hypothèse du Lemme 3.32 est satisfaite.

Proof. Pour $k = 1, 2$, le travail est achevé. Raisonnons par récurrence en supposant le lemme vrai pour un entier k. On supposera k impair – le cas où il est pair se traitera de manière similaire.

Remplaçons (t, τ) par $\underline{\Gamma}_{k+1}(z_{(k+1)})$ dans la première ligne de (5.22) ; utilisons la seconde relation (5.25) pour simplifier ; appliquons l'hypothèse de récurrence, c'est-à-dire la première ligne de (5.31) : ces trois actions reviennent à effectuer le calcul suivant :

(5.32)
$$\begin{cases} J_t^{\ell} h\left(\underline{\Gamma}_{k+1}(z_{(k+1)})\right) \equiv \Phi_\ell\left(\underline{\Gamma}_{k+1}(z_{(k+1)}),\, J_\tau^{\ell_0+\ell}\overline{h}\left(\underline{\Gamma}_{k+1}(z_{(k+1)})\right)\right) \\ \qquad\qquad\qquad\qquad \equiv \Phi_\ell\left(\underline{\Gamma}_{k+1}(z_{(k+1)}),\, J_\tau^{\ell_0+\ell}\overline{h}\left(\underline{\Gamma}_{k}(z_{(k)})\right)\right) \\ \qquad\qquad\qquad\qquad \equiv \Phi_\ell\left(\underline{\Gamma}_{k+1}(z_{(k+1)}),\, \overline{\Pi}_{\ell_0+\ell,\,k}\left(z_{(k)},\, J_t^{k\ell_0+\ell_0+\ell}h(0)\right)\right) \\ \qquad\qquad\qquad\qquad =: \Pi_{\ell,\,k+1}\left(z_{(k+1)},\, J_t^{(k+1)\ell_0+\ell}h(0)\right). \end{cases}$$

Le résultat obtenu n'est autre que la formule (5.31) au niveau $k+1$. $\square$

Étudions à présent la convergence de h avec des hypothèses moins simples que la non-dégénérescence finie **(h2)**.

§6. Convergence d'applications CR formelles Segre non-dégénérées

6.1. Préliminaire. Cette section est entièrement consacrée à démontrer le Théorème 1.39 **(iii)**, valable pour des applications CR formelles satisfaisant la condition de non-dégénérescence **(h4)**. D'après le §5.2, nous pouvons développer les identités de réflexion (5.3) sous la forme (5.6). En revenant à la définition (1.34) des séries $\Psi'_{j',\beta}(z, w, \zeta, \xi, t')$ introduites dans le §1.33, nous avons la coïncidence de notations :

$$\begin{cases} 0 \equiv \Psi'_{j',\beta}\left(z, \overline{\Theta}(z, 0), 0, 0, h\left(z, \overline{\Theta}(z, 0)\right)\right) \\ \quad\;\; \equiv R'_{j',\beta}\left(z, \overline{\Theta}(z, 0), 0, 0, J_\tau^{|\beta|}\overline{h}(0) : h\left(z, \overline{\Theta}(z, 0)\right)\right). \end{cases} \tag{6.2}$$

Une fois pour toutes, choisissons des entiers $j'(1), \ldots, j'(n')$ et des multi-indices distincts $\beta(1), \ldots, \beta(n')$ tels que le déterminant (1.36) ne s'annule pas. Pour alléger la présentation, nous noterons les séries $R'_{j'(i'_1),\beta(i'_1)}$ par $R'_{i'_1}$, pour $i'_1 = 1, \ldots, n'$. Définissons $\ell_0 := \max_{1\le i'_1\le n'} |\beta(i'_1)|$.

6.3. Proposition principale. Nous ramenons ainsi la démonstration du Théorème 1.39 **(iii)** à la proposition suivante, légèrement plus générale, puisqu'on ne suppose pas que h est une application CR formelle à valeurs dans une sous-variété générique analytique réelle complexifiée $\mathscr{M}'$, mais seulement que c'est une application formelle satisfaisant certaines équations analytiques.

Proposition 6.4. *Soient $R'_{i'}\left(t, \tau, J^{\ell_0} : t'\right)$, $i' = 1, \ldots, n'$, des séries entières holomorphes dans un voisinage de $\left(0, 0, J_\tau^{\ell_0}\overline{h}(0) : 0\right)$ dans $\mathbb{C}^n \times \mathbb{C}^n \times \mathbb{C}^{N_{n',n,\ell_0}}$, polynomiales par rapport aux variables de jets stricts. Soit $\mathscr{M}$ la complexification d'une sous-variété analytique réelle générique*

représentée par les équations (3.6) *et soit* $h(t) \in \mathbb{C}[\![t]\!]^{n'}$ *une application formelle, avec* $h(0) = 0$. *Supposons que pour* $(t, \tau) \in \mathscr{M}$, *les deux identités formelles conjuguées qui suivent sont satisfaites* :

$$\begin{cases} 0 \ = R'_{i'}\left(t,\, \tau,\, J_\tau^{\ell_0}\overline{h}(\tau)\ :h(t)\right), \\ 0 \ = \overline{R}'_{i'}\left(\tau,\, t,\, J_t^{\ell_0}h(t)\ :\overline{h}(\tau)\right). \end{cases} \tag{6.5}$$

pour $i' = 1, \ldots, n'$. *Si* $\mathscr{M}$ *est minimale en* 0 *et si le déterminant suivant* :

$$\det\left(\frac{\partial R'_{i'}}{\partial t_{i'_1}}\left(z,\, \overline{\Theta}(z,\, 0),\, 0,\, 0,\, J_\tau^{\ell_0}\overline{h}(0)\ :h\left(z,\, \overline{\Theta}(z,\, 0)\right)\right)\right)_{1\leq i',\, i'_1\leq n'} \not\equiv 0, \tag{6.6}$$

ne s'annule pas identiquement dans $\mathbb{C}\{z\}$, *l'application* $h(t) \in \mathbb{C}\{t\}^{n'}$ *est convergente.*

Proof. En travaillant avec les chaînes de Segre Γ_k (alors que nous avons travaillé avec les chaînes conjuguées $\underline{\Gamma}_k$ dans la Section 5), établissons que $h\left(\Gamma_k(z_{(k)})\right) \in \mathbb{C}\{z_{(k)}\}^{n'}$ pour tout $k \in \mathbb{N}$. D'après le Lemme 3.32, cela suffira pour obtenir la conclusion de la Proposition 6.4. Commençons par établir un critère simplifié pour la convergence des jets de h et de $\overline{h}$ sur les chaînes de Segre.

6.7. Jets transversaux de h. Rappelons que les champs de vecteurs Υ_j et $\underline{\Upsilon}_j$ tangents à $\mathscr{M}$ sont définis par (5.16). Notons les relations

$$\begin{cases} J_\tau^\ell\overline{h}\left(\Gamma_k\left(z_{(k)}\right)\right) \ \equiv J_\tau^\ell\overline{h}\left(\Gamma_{k-1}\left(z_{(k-1)}\right)\right), & \text{si } k \text{ est impair}, \\ J_t^\ell h\left(\Gamma_k\left(z_{(k)}\right)\right) \ \equiv J_t^\ell h\left(\Gamma_{k-1}\left(z_{(k-1)}\right)\right), & \text{si } k \text{ est pair}, \end{cases} \tag{6.8}$$

qui sont analogues et équivalentes par conjugaison aux relations (5.25).

Lemme 6.9. Soit $\ell \in \mathbb{N}$, soit $k \in \mathbb{N}$ et soit $\Gamma_k(z_{(k)})$ la k-ième chaîne de Segre. Les propriétés suivantes sont équivalentes :

(i) Le jet d'ordre ℓ de h ou de $\overline{h}$ converge sur la k-ième chaîne de Segre, *i.e.* en tenant compte des simplifications (6.8) :

$$\begin{cases} J_t^\ell h\left(\Gamma_k(z_{(k)})\right) \ \in \mathbb{C}\{z_{(k)}\}^{N_{n',\, n,\, \ell}} & \text{si } k \text{ est impair}, \\ J_\tau^\ell\overline{h}\left(\Gamma_k(z_{(k)})\right) \ \in \mathbb{C}\{z_{(k)}\}^{N_{n',\, n,\, \ell}} & \text{si } k \text{ est pair}\ ; \end{cases} \tag{6.10}$$

(ii) pour tout $\beta \in \mathbb{N}^m$ et tout $\delta \in \mathbb{N}^d$ satisfaisant $|\beta| + |\delta| \leq \ell$, les dérivées suivantes de h ou de $\overline{h}$ convergent :

$$\begin{cases} \left[\mathscr{L}^\beta\Upsilon^\delta h\right]\left(\Gamma_k(z_{(k)})\right) \ \in \mathbb{C}\{z_{(k)}\}^{n'} & \text{si } k \text{ est impair}, \\ \left[\underline{\mathscr{L}}^\beta\underline{\Upsilon}^\delta\overline{h}\right]\left(\Gamma_k(z_{(k)})\right) \ \in \mathbb{C}\{z_{(k)}\}^{n'} & \text{si } k \text{ est pair}\ ; \end{cases} \tag{6.11}$$

(iii) pour tout $\delta \in \mathbb{N}^d$ satisfaisant $|\delta| \leq \ell$, les dérivées suivantes de h ou de $\overline{h}$ convergent :

$$\begin{cases} \left[\Upsilon^\delta h\right]\left(\Gamma_k(z_{(k)})\right) \ \in \mathbb{C}\{z_{(k)}\}^{n'} & \text{si } k \text{ est impair}, \\ \left[\underline{\Upsilon}^\delta\overline{h}\right]\left(\Gamma_k(z_{(k)})\right) \ \in \mathbb{C}\{z_{(k)}\}^{n'} & \text{si } k \text{ est pair}. \end{cases} \tag{6.12}$$

Interprétons la dernière propriété **(iii)** : on doit se figurer que les différentiations $\mathscr{L}^\beta$ et $\underline{\mathscr{L}}^\beta$ sont «horizontales», puisqu'elles agissent le long des sous-variétés de Segre complexifiées (conjuguées) ; au contraire, les différentiations Υ^δ et $\underline{\Upsilon}^\delta$ doivent être considérées comme «transversales», puisque les $2m+d$ champs de vecteurs $\mathscr{L}_k$, $\underline{\mathscr{L}}_k$ et Υ_j (ou $\underline{\Upsilon}_j$) engendrent $T\mathscr{M}$ (*cf.* le §5.15). Ainsi, le Lemme 6.9 ramène la convergence **(i)** des jets de h et de $\overline{h}$ à celle **(iii)** de leurs seuls «jets transversaux».

Proof. Rappelons qu'en développant $\mathscr{L}^\beta\Upsilon^\delta h_{i'}(t)$ (ou $\underline{\mathscr{L}}^\beta\underline{\Upsilon}^\delta\overline{h}_{i'}(\tau)$) par rapport aux jets $\partial_t^\alpha h_{i'}(t)$, on obtient les formules (5.18) et leurs inverses (5.20) (ainsi que leurs conjuguées). Nous en déduisons immédiatement l'équivalence entre **(i)** et **(ii)**.

(ii) implique **(iii)** trivialement. Réciproquement, supposons k impair pour fixer les idées. Observons que la k-ième chaîne de Segre $\Gamma_k(z_{(k)})$ s'écrit $\mathscr{L}_{z_k}\left(\Gamma_{k-1}(z_{(k-1)})\right)$. Soit $\phi(t)\in\mathbb{C}[\![t]\!]^{n'}$ une application formelle arbitraire. Soit $z\in\mathbb{C}^m$. D'après la définition (3.13) du flot de $\mathscr{L}$, on $\frac{\partial}{\partial z_l}\left[\phi(\mathscr{L}_z(0))\right]\equiv\left[\mathscr{L}_l\phi\right](\mathscr{L}_z(0))$, pour $l=1,\,\ldots,\,m$. Plus généralement, en notant $z_{k;\,l}$, $l=1,\,\ldots,\,m$, les composantes de $z_k\in\mathbb{C}^m$, on a :

$$\frac{\partial}{\partial z_{k;\,l}}\left[\phi\left(\mathscr{L}_{z_k}\left(\Gamma_{k-1}(z_{(k-1)})\right)\right)\right]\equiv\left[\mathscr{L}_l\phi\right]\left(\Gamma_k(z_{(k)})\right). \tag{6.13}$$

Pour un multiindice $\beta\in\mathbb{N}^m$ arbitraire, nous en déduisons l'identité :

$$\partial_{z_k}^\beta\left[\phi\left(\Gamma_k(z_{(k)})\right)\right]\equiv\left[\mathscr{L}^\beta\phi\right]\left(\Gamma_k(z_{(k)})\right). \tag{6.14}$$

Supposons maintenant que $\left[\Upsilon^\delta h\right]\left(\Gamma_k(z_{(k)})\right)\in\mathbb{C}\{z_{(k)}\}^{n'}$ est convergent. Puisque la propriété de convergence d'une série formelle est stable par dérivation quelconque par rapport à ses variables, nous en déduisons, en appliquant la différentiation $\partial_{z_k}^\beta$ à la série $\left[\Upsilon^\delta h\right]\left(\Gamma_k(z_{(k)})\right)$ et en utilisant au passage la formule (6.14), que $\left[\mathscr{L}^\beta\Upsilon^\delta\right]\left(\Gamma_k(z_{(k)})\right)$ est aussi convergent, pour tout $\beta\in\mathbb{N}^m$. Ceci démontre que **(iii)** implique **(ii)** dans le cas où k est impair. Le cas où k est pair se traite de manière analogue. □

6.15 Convergence des jets de h et de $\overline{h}$ sur la première chaîne de Segre. Nous pouvons maintenant amorcer la démonstration de la Proposition 6.4. Rappelons que pour $k=1$, on a $z_{(1)}\equiv z_1\in\mathbb{C}^m$. Remplaçons $(t,\,\tau)$ par $\Gamma_1(z_1)$ dans la première ligne de (6.5), ce qui nous donne les n' identités formelles :

$$0\equiv R'_{i'}\left(\Gamma_1(z_1),\,J_\tau^{\ell_0}\overline{h}(0)\,:h(\Gamma_1(z_1))\right), \tag{6.16}$$

pour $i'=1,\,\ldots,\,n'$. Au passage, nous avons utilisé la relation connue $J_\tau^{\ell_0}\overline{h}\left(\Gamma_1(z_1)\right)\equiv J_\tau^{\ell_0}\overline{h}(0)$. G rîce à l'analyticité des $R'_{i'}$, grâce au fait que $J_\tau^{\ell_0}\overline{h}(0)$ est constant, grâce au Corollaire 2.9 et enfin, grâce à l'hypothèse analytique principale (6.6) de la Proposition 6.4, nous déduisons immédiatement de (6.16) que la restriction de h à la première chaîne de Segre, *i.e.* $h(\Gamma_1(z_1))\equiv h\left(z_1,\,\overline{\Theta}(z_1,\,0)\right)\in\mathbb{C}\{z_1\}^{n'}$, est convergente.

La prochaine étape consiste à généraliser aux jets de h d'ordre quelconque cette propriété de convergence, après composition par $\Gamma_1(z_1)$. Nous verrons dans le §6.29 ci-après pourquoi cela est nécessaire.

Lemme 6.17. Pour tout $\ell \in \mathbb{N}$, on a $J_t^\ell h\left(\Gamma_1(z_1)\right) \in \mathbb{C}\{z_1\}^{N_{n',\,n,\,\ell}}$.

Proof. Grâce au Lemme 6.9, il suffit d'établir que

$$\left[\Upsilon^\delta h\right]\left(\Gamma_1(z_1)\right) \in \mathbb{C}\{z_1\}^{n'}, \tag{6.18}$$

pour tout $\delta \in \mathbb{N}^d$. Pour cela, nous aurons besoin de formules analogues à (6.13) et (6.14), en remplaçant $\mathscr{L}$ par Υ et $\underline{\mathscr{L}}$ par $\underline{\Upsilon}$. Soient $p = (z_p,\, w_p,\, \zeta_p,\, \xi_p) \in \mathscr{M}$, $w \in \mathbb{C}^d$ et $\xi \in \mathbb{C}^d$. Les multiflots des champs de vecteurs Υ_j et $\underline{\Upsilon}_j$ introduits dans (5.16) ont pour expression explicite

$$\begin{cases} \Upsilon_w(p) \;:= (z_p,\, w_p + w,\, \zeta_p,\, \Theta(\zeta_p,\, z_p,\, w_p + w)) \qquad \text{et} \\ \underline{\Upsilon}_\xi(p) \;:= \left(z_p,\, \overline{\Theta}(z_p,\, \zeta_p,\, \xi_p + \xi),\, \zeta_p,\, \xi_p + \xi\right). \end{cases} \tag{6.19}$$

Il est clair que $\Upsilon_w(p) \in \mathscr{M}$ et que $\underline{\Upsilon}_\xi(p) \in \mathscr{M}$. Soit $\phi(t) \in \mathbb{C}[\![t]\!]^{n'}$. L'argument qui nous a permis d'établir (6.14) permet de vérifier que pour tout $\delta \in \mathbb{N}^d$, la relation formelle suivante est satisfaite :

$$\partial_w^\delta\left[\phi\left(\Upsilon_w\left(\Gamma_1(z_1)\right)\right)\right] \equiv \left[\Upsilon^\delta \phi\right]\left(\Upsilon_w\left(\Gamma_1(z_1)\right)\right). \tag{6.20}$$

Remplaçons maintenant $(t,\, \tau)$ par $\Upsilon_w\left(\Gamma_1(z_1)\right) \in \mathscr{M}$ dans la première ligne de (6.5), ce qui donne les identités formelles :

$$0 \equiv R'_{i'}\left(\Upsilon_w\left(\Gamma_1(z_1)\right),\, J_\tau^{\ell_0}\overline{h}\left(\Upsilon_w\left(\Gamma_1(z_1)\right)\right) \,:\, h\left(\Upsilon_w\left(\Gamma_1(z_1)\right)\right)\right), \tag{6.21}$$

dans $\mathbb{C}[\![z_1,\, w]\!]$, pour $i' = 1,\, \ldots,\, n'$. Dans ces identités, on ne peut effectuer aucune simplification en utilisant les relations (6.8). Néanmoins, en différentiant ces identités par rapport à w_j, $j = 1,\, \ldots,\, d$, et en posant $w = 0$, on pourra appliquer la simplification cruciale $J_\tau^{\ell_0}\overline{h}(\Gamma_1(z_1)) \equiv J_\tau^{\ell_0}\overline{h}(0)$. Pour exprimer précisément ce que fournit l'application de l'opérateur $\partial_{w_j}(\cdot)|_{w=0}$ à (6.21), groupons les variables dont dépendent les séries convergentes $R'_{i'}$ en trois sous-groupes : $(t,\, \tau)$; J^{ℓ_0} ; et t'. En appliquant l'opérateur $\partial_{w_j}(\cdot)|_{w=0}$ à (6.21), grâce à la «règle de la chaîne» pour la différentiation de séries composées et grâce à (6.20), nous obtenons une somme massive constituée de trois sous-groupes de polynômes différentiels, que nous écrivons en détail comme suit, juste avant de formuler des

commentaires explicatifs :

(6.22)
$$\begin{cases} 0 \equiv \dfrac{\partial R'_{i'}}{\partial w_j}\left(\Gamma_1(z_1),\, J_\tau^{\ell_0}\overline{h}(0)\ :h\left(\Gamma_1(z_1)\right)\right) + \\ + \displaystyle\sum_{l=1}^{n} \dfrac{\partial \Theta_l}{\partial w_j}(0,\, z_1,\, \overline{\Theta}(z_1,\, 0))\, \dfrac{\partial R'_{i'}}{\partial \xi_l}\left(\Gamma_1(z_1),\, J_\tau^{\ell_0}\overline{h}(0)\ :h\left(\Gamma_1(z_1)\right)\right) + \\ + \displaystyle\sum_{i'_1=1}^{n'} \sum_{\alpha_1\in\mathbb{N}^n,\, |\alpha_1|\leq \ell_0} \dfrac{\partial R'_{i'}}{\partial\left(\partial_\tau^{\alpha_1}\overline{h}_{i'_1}\right)}\left(\Gamma_1(z_1),\, J_\tau^{\ell_0}\overline{h}(0)\ :h\left(\Gamma_1(z_1)\right)\right)\cdot \Upsilon_j \partial_\tau^{\alpha_1}\overline{h}_{i'}(0) + \\ + \displaystyle\sum_{i'_1=1}^{n'} \dfrac{\partial R'_{i'}}{\partial t'_{i'_1}}\left(\Gamma_1(z_1),\, J_\tau^{\ell_0}\overline{h}(0)\ :h\left(\Gamma_1(z_1)\right)\right)\cdot\left[\Upsilon_j h_{i'_1}\right]\left(\Gamma_1(z_1)\right), \end{cases}$$

pour $i' = 1, \ldots, n'$ et $j = 1, \ldots, d$. Les deux premières lignes explicitent les dérivées partielles par rapport au premier groupe de variables $(t,\, \tau)$; la troisième ligne collecte les dérivées partielles par rapport au second groupe $J_\tau^{\ell_0}\overline{h}$; la quatrième ligne collecte les dérivées partielles par rapport au troisième groupe t'. D'après le début du §6.15, nous savons déjà que $h(\Gamma_1(z_1)) \in \mathbb{C}\{z_1\}^{n'}$ converge. En examinant tous les termes de la première, de la deuxième et de la troisième ligne de (6.22), nous voyons qu'ils sont convergents. De plus, les termes de la quatrième ligne situés avant le signe de multiplication «·» sont eux aussi convergents. Par conséquent, nous pouvons réécrire (6.22) sous la forme contractée :

$$0 \equiv b'_{i',\, j}(z_1) + \sum_{i'_1=1}^{n'} r'_{i',\, i'_1,\, j}(z_1)\cdot\left[\Upsilon_j h_{i'_1}\right]\left(\Gamma_1(z_1)\right), \tag{6.23}$$

pour $i' = 1, \ldots, n'$ et $j = 1, \ldots, d$. Ici, comme nous venons de le remarquer, les séries entières $b'_{i',\, j}(z_1)$ et $r'_{i',\, i'_1,\, j}(z_1)$ sont convergentes. En fixant j pour appliquer le lemme suivant, nous déduisons de (6.23) que $\left[\Upsilon_j h_{i'_1}\right]\left(\Gamma_1(z_1)\right) \in \mathbb{C}\{z_1\}$ converge, pour tout $i'_1 = 1, \ldots, n'$ et tout $j = 1, \ldots, d$.

Lemme 6.24. Soit $\nu \in \mathbb{N}$, $\nu \geq 1$, soit $\mathsf{x} \in \mathbb{C}^\nu$, soit $n' \in \mathbb{N}$, $n' \geq 1$, soit $r'_{i',\, i'_1}(\mathsf{x}) \in \mathbb{C}\{\mathsf{x}\}$ pour $i',\, i'_1 = 1, \ldots, n'$ et soit $b'_{i'}(\mathsf{x}) \in \mathbb{C}\{\mathsf{x}\}$ pour $i' = 1, \ldots, n'$. Si n' séries a priori formelles $a'_{i'_1}(\mathsf{x}) \in \mathbb{C}[\![\mathsf{x}]\!]$, $i'_1 = 1, \ldots, n'$, satisfont formellement le système linéaire

$$0 \equiv b'_{i'}(\mathsf{x}) + \sum_{i'_1=1}^{n'} r'_{i',\, i'_1}(\mathsf{x})\, a'_{i'_1}(\mathsf{x}), \tag{6.25}$$

et si

$$\det\left(r'_{i',\, i'_1}(\mathsf{x})\right)_{1\leq i',\, i'_1\leq n'} \not\equiv 0 \tag{6.26}$$

dans $\mathbb{C}\{\mathsf{x}\}$, les séries $a'_{i'_1}(\mathsf{x}) \in \mathbb{C}\{\mathsf{x}\}$ sont en fait convergentes.

On peut démontrer ce lemme de manière élémentaire en appliquant les formules de Cramer : pour chaque $a'_{i'_1}(\mathsf{x})$, on obtient alors un quotient de séries convergentes, dont le dénominateur est constitué du déterminant (6.26) ; par unicité des séries formelles $a'_{i'_1}(\mathsf{x})$, le dénominateur est nécessairement absorbé par le numérateur ; en appliquant le théorème de division de K. Weierstrass (version formelle et version analytique), on en déduit que les séries $a'_{i'_1}(\mathsf{x}) \in \mathbb{C}\{\mathsf{x}\}$ convergent. Observons aussi que ce lemme est un cas particulier du Corollaire 2.9, si l'on considère les équations analytiques $r'_{i'}(\mathsf{x},\, \mathsf{y}) := b'_{i'}(\mathsf{x}) + \sum_{i'_1=1}^{n'} r'_{i',\, i'_1}(\mathsf{x})\, \mathsf{y}_{i'_1} = 0$.

En résumé, nous avons établi que $[\Upsilon_j h]\,(\Gamma_1(z_1)) \in \mathbb{C}\{z_1\}^{n'}$ pour $j = 1,\, \ldots,\, d$, ce qui nous donne le Lemme 6.17 pour $\ell = 1$.

Pour traiter le cas général, nous allons démontrer (6.18) par récurrence. Soit $\ell \in \mathbb{N}$ tel que $\ell \geq 1$; supposons la propriété (6.18) satisfaite pour tout multiindice $\delta_2 \in \mathbb{N}^d$ tel que $|\delta_2| \leq \ell$. Soit j tel que $1 \leq j \leq d$. Soit $\delta_1 \in \mathbb{N}^d$ un multiindice arbitraire tel que $|\delta_1| = \ell$. Rappelons qu'un multiindice $\delta \in \mathbb{N}^d$ arbitraire tel que $|\delta| = \ell + 1$ s'écrit $\delta = \delta_1 + \mathbf{1}^d_j$, où $\mathbf{1}^d_j$ désigne le multiindice $(0,\, \ldots,\, 0,\, 1,\, 0,\, \ldots,\, 0) \in \mathbb{N}^d$, où l'entier 1 se situe à la j-ième place et où 0 se trouve aux autres places. En appliquant la dérivation $\partial_{w_j} \partial_w^{\delta_1}$ à (6.21), en utilisant la «règle de la chaîne» pour la différentiation de séries entières composées et en utilisant la formule de Leibniz pour la différentiation des divers produits qui apparaissent, nous pourrions écrire sous forme développée une formule (compliquée) qui généraliserait (6.22), mais un tel travail formel n'est pas réellement nécessaire. En effet, en tenant compte de l'hypothèse de récurrence, nous affirmons qu'il existe des séries entières convergentes $b'_{i',\, \delta_1,\, j}(z_1) \in \mathbb{C}\{z_1\}$ telles que l'application des dérivations $\partial_{w_j} \partial_w^{\delta_1}$ à (6.21) fournit les identités formelles suivantes :
(6.27)

$$0 \equiv b'_{i',\, \delta_1,\, j}(z_1) + \sum_{i'_1=1}^{n'} \frac{\partial R'_{i'}}{\partial t'_{i'_1}} \left(\Gamma_1(z_1),\, J^{\ell_0}_\tau \overline{h}(0)\, :\, h\,(\Gamma_1(z_1))\right) \cdot \left[\Upsilon_j \Upsilon^{\delta_1} h_{i'_1}\right] (\Gamma_1(z_1)),$$

pour $i' = 1,\, \ldots,\, n'$, et pour $j = 1,\, \ldots,\, d$. En effet, le terme $b'_{i',\, \delta_1,\, j}(z_1)$ collecte toutes les dérivées partielles de $R'_{i'}$ (par rapport aux trois groupes de variables $(t,\, \tau)$; $J^{\ell_0}\overline{h}$; et t') autres que celles écrites dans (6.27) ; ces dérivées partielles peuvent être multipliées par des coefficients entiers et par des termes de la forme $\Upsilon^{\delta_2} h_{i'_2}\,(\Gamma_1(z_1))$, pour $i'_2 = 1,\, \ldots,\, n'$ et pour $|\delta_2| \leq \ell$. Tous ces termes convergent, grâce à l'hypothèse de récurrence : c'est pourquoi $b'_{i',\, \delta_1,\, j}(z_1) \in \mathbb{C}\{z_1\}$.

Pour terminer, réécrivons (6.27) sous la forme suivante

$$0 \equiv b'_{i',\, \delta_1,\, j}(z_1) + \sum_{i'_1=1}^{n'} r_{i',\, i'_1,\, j}(z_1) \cdot \left[\Upsilon_j \Upsilon^{\delta_1} h_{i'_1}\right] (\Gamma_1(z_1)), \tag{6.28}$$

qui est analogue à (6.23), avec les mêmes coefficients convergents $r_{i',\, i'_1,\, j}(z_1) \in \mathbb{C}\{z_1\}$. Une application directe du Lemme 6.24 permet de

conclure que $\left[\Upsilon_j \Upsilon^{\delta_1} h_{i'_1}\right](\Gamma_1(z_1)) \in \mathbb{C}\{z_1\}$ pour tout $j = 1, \ldots, d$, tout $|\delta_1| = \ell$ et tout $i'_1 = 1, \ldots, n'$. Ceci complète la démonstration de (6.18) par récurrence sur $|\delta|$. Le Lemme 6.17 est démontré. $\square$

6.29. Convergence des jets de h et de $\overline{h}$ sur la seconde chaîne de Segre. Dans le précédent paragraphe, nous n'avons pas insisté sur le fait que les jets de $\overline{h}$ convergent sur la première chaîne de Segre, parce que cette propriété est triviale : en effet, grâce à (6.8), le jet $J^\ell_\tau \overline{h}(\Gamma_1(z_1)) \equiv J^\ell_\tau \overline{h}(0)$ est constant, donc convergent. Un phénomène analogue prévaut sur la deuxième chaîne de Segre : puisque l'on a $J^\ell_t h\left(\Gamma_2(z_{(2)})\right) \equiv J^\ell_t h(\Gamma_1(z_1))$ grâce à (6.8), il découle du Lemme 6.17 démontré précédemment que les jets de h convergent (gratuitement) sur la deuxième chaîne de Segre.

Pour démontrer que la série entière $\overline{h}\left(\Gamma_2(z_{(2)})\right)$ converge par rapport à $z_{(2)} \in \mathbb{C}^{2m}$, écrivons la seconde ligne de (6.5) en y remplaçant (t, τ) par $\Gamma_2(z_{(2)})$, ce qui nous donne les n' identités formelles :

$$0 \equiv \overline{R}'_{i'}\left(\sigma\left(\Gamma_2(z_{(2)})\right),\, J^{\ell_0}_t h\left(\Gamma_1(z_1)\right) : \overline{h}\left(\Gamma_2(z_{(2)})\right)\right), \tag{6.30}$$

pour $i' = 1, \ldots, n'$. Ici, puisque le premier groupe (τ, t) d'arguments de $\overline{R}'_{i'}$ dans (6.5) est écrit dans l'ordre inverse de l'ordre habituel (t, τ), pour être rigoureux sur le plan notationnel, nous avons composé la chaîne $\Gamma_2(z_{(2)})$ avec l'involution holomorphe $\sigma(t, \tau) := (\tau, t)$ introduite juste avant le §3.18. Mais dans la Section 7 ci-dessous, nous admettrons le léger écart de notation qui consiste à sous-entendre σ. Bien entendu, nous avons utilisé (6.8) pour simplifier $J^{\ell_0}_t h\left(\Gamma_2(z_{(2)})\right) \equiv J^{\ell_0}_t h\left(\Gamma_1(z_1)\right)$. Grâce au Lemme 6.18, le terme $J^{\ell_0}_t h\left(\Gamma_1(z_1)\right)$ est convergent : c'est bien parce qu'il apparaît dans (6.30) que nous avions besoin de démontrer à l'avance que les jets de h convergent sur $\Gamma_1(z_1)$, au moins jusqu'à l'ordre ℓ_0. Par conséquent, les équations (6.30) sont convergentes par rapport à leurs deux premiers groupes de variables. Pour appliquer le Corollaire 2.9, il suffit à présent de vérifier que le déterminant suivant :

$$\det\left(\frac{\partial \overline{R}'_{i'}}{\partial \overline{t}'_{i'_1}}\left(\sigma\left(\Gamma_2(z_{(2)})\right),\, J^{\ell_0}_t h\left(\Gamma_1(z_1)\right) : \overline{h}\left(\Gamma_2(z_{(2)})\right)\right)\right)_{1 \leq i', i'_1 \leq n'} \tag{6.31}$$

ne s'annule pas identiquement dans $\mathbb{C}[\![z_{(2)}]\!] = \mathbb{C}[\![z_1, z_2]\!]$. Or, en posant $z_1 = 0$ et en tenant compte de la relation $\Gamma_2(0, z_2) = \underline{\mathscr{L}}_{z_2}(\mathscr{L}_{z_1}(0))|_{z_1=0} = \underline{\mathscr{L}}_{z_2}(\mathscr{L}_0(0)) = \underline{\Gamma}_1(z_2)$, ce déterminant se simplifie comme suit :

$$\left\{\begin{aligned} &\det\left(\frac{\partial \overline{R}'_{i'}}{\partial \overline{t}'_{i'_1}}\left(\sigma\left(\underline{\Gamma}_1(z_2)\right),\, J^{\ell_0}_t h(0) : \overline{h}\left(\underline{\Gamma}_1(z_2)\right)\right)\right)_{1 \leq i', i'_1 \leq n'} \\ &\equiv \det\left(\frac{\partial \overline{R}'_{i'}}{\partial \overline{t}'_{i'_1}}\left(z_2, \Theta(z_2, 0), 0, 0, J^{\ell_0}_t h(0) : \overline{h}\left(z_2, \Theta(z_2, 0)\right)\right)\right)_{1 \leq i', i'_1 \leq n'}. \end{aligned}\right. \tag{6.32}$$

Grâce à l'hypothèse principale (6.6) (retrouvée ici à une conjugaison près), ce dernier déterminant ne s'annule pas identiquement dans $\mathbb{C}[\![z_2]\!]$, donc le déterminant (6.31) ne s'annule pas identiquement dans $\mathbb{C}[\![z_{(2)}]\!]$ et le corollaire 2.9 nous permet de conclure que $\overline{h}\left(\Gamma_2(z_{(2)})\right) \in \mathbb{C}\{z_{(2)}\}^{n'}$ converge.

Nous pourrions poursuivre le raisonnement et établir une version du Lemme 6.17 sur la deuxième chaîne de Segre, *i.e.* démontrer que $J_\tau^\ell \overline{h}\left(\Gamma_2(z_{(2)})\right) \in \mathbb{C}\{z_{(2)}\}^{N_{n',\,n\,\ell}}$ pour tout $\ell \in \mathbb{N}$. Mais puisque nous avons maintenant passé en revue et commenté en détail tous les points techniques délicats, nous pouvons d'ores et déjà entamer la démonstration finale de la Proposition 6.4 en raisonnant par double récurrence sur la longueur k des chaînes de Segre et sur l'ordre ℓ des jets de h.

6.33. Démonstration finale. Pour conclure la Proposition 6.4, nous savons qu'il suffit d'établir le lemme suivant, qui généralise le Lemme 6.17.

Lemme 6.34. Pour tout $k \in \mathbb{N}$ et tout $\ell \in \mathbb{N}$, on a

$$\text{(6.35)} \qquad \begin{cases} J_t^\ell h\left(\Gamma_k(z_{(k)})\right) \in \mathbb{C}\{z_{(k)}\}^{N_{n',\,n,\,\ell}}, & \text{si } k \text{ est impair ;} \\ J_\tau^\ell \overline{h}\left(\Gamma_k(z_{(k)})\right) \in \mathbb{C}\{z_{(k)}\}^{N_{n',\,n,\,\ell}}, & \text{si } k \text{ est pair.} \end{cases}$$

Proof. Pour $k = 1$, ce lemme est déjà démontré. Supposons que la propriété (6.35) est satisfaite au niveau k et démontrons-la au niveau $k+1$. Pour fixer les idées, nous supposerons k impair – le cas où k est pair se traitant de manière similaire.

L'objectif est de démontrer que $J_\tau^\ell \overline{h}\left(\Gamma_{k+1}(z_{(k+1)})\right) \in \mathbb{C}\{z_{(k+1)}\}^{N_{n',\,n,\,\ell}}$ converge. Grâce au Lemme 6.9, il suffit de démontrer que

$$\text{(6.36)} \qquad \left[\underline{\Upsilon}^\delta \overline{h}\right]\left(\Gamma_{k+1}(z_{(k+1)})\right) \in \mathbb{C}[\![z_{(k)}]\!]^{n'},$$

pour tout $\delta \in \mathbb{N}^d$. Nous allons raisonner par récurrence sur l'entier $|\delta|$.

Traitons d'abord le cas $\delta = 0$, déjà vu ci-dessus pour $k+1 = 2$. Pour cela, posons $(t,\, \tau) := \Gamma_{k+1}(z_{(k+1)})$ dans la seconde ligne de (6.5), ce qui nous donne :

$$\text{(6.37)} \quad 0 \equiv \overline{R}'_{i'}\left(\sigma\left(\Gamma_{k+1}(z_{(k+1)})\right),\, J_t^{\ell_0} h\left(\Gamma_k(z_{(k)})\right) : \overline{h}\left(\Gamma_{k+1}(z_{(k+1)})\right)\right),$$

pour $i' = 1, \ldots, n'$. Grâce à l'hypothèse de récurrence, le deuxième argument de $\overline{R}'_{i'}$ est convergent. Pour appliquer le Corollaire 2.9, il suffit donc de vérifier que le déterminant suivant :

(6.38)

$$\det\left(\frac{\partial \overline{R}'_{i'}}{\partial \overline{t}'_{i'_1}}\left(\sigma\left(\Gamma_{k+1}(z_{(k+1)})\right),\, J_t^{\ell_0} h\left(\Gamma_k(z_k)\right) : \overline{h}\left(\Gamma_{k+1}(z_{(k+1)})\right)\right)\right)_{1 \le i',\, i'_1 \le n'}$$

ne s'annule pas identiquement dans $\mathbb{C}[\![z_{(k+1)}]\!] = \mathbb{C}[\![z_{(k)},\, z_{k+1}]\!]$. Or, en posant $z_{(k)} = 0$ et en tenant compte de la relation $\Gamma_{k+1}(0,\, z_{k+1}) = \underline{\Gamma}_1(z_{k+1})$, ce déterminant se simplifie et coïncide avec le déterminant (6.32) dans lequel z_2 est remplaçé par z_{k+1}. Grâce à l'hypothèse principale (6.6), il ne s'annule pas identiquement dans $\mathbb{C}[\![z_{k+1}]\!]$, donc le déterminant (6.38) ne

s'annule pas identiquement dans $\mathbb{C}[\![z_{(k+1)}]\!]$ et le corollaire (2.9) nous permet de conclure que $\overline{h}\left(\Gamma_{k+1}(z_{(k+1)})\right) \in \mathbb{C}\{z_{(k+1)}\}^{n'}$ converge.

Soit $\ell \in \mathbb{N}$ avec $\ell \geq 0$; supposons la propriété (6.36) vraie pour tout multiindice $\delta_2 \in \mathbb{N}^d$ tel que $|\delta_2| \leq \ell$. Soit $\delta_1 \in \mathbb{N}^d$ un multiindice arbitraire tel que $|\delta_1| = \ell$. Considérons le multiindice $\delta_1 + \mathbf{1}_j^d$.

En remplaçant (t, τ) par $\underline{\Upsilon}_\xi\left(\Gamma_{k+1}(z_{(k+1)})\right)$ dans la deuxième ligne de (6.5), où $\xi \in \mathbb{C}^d$, nous obtenons les identités formelles :

(6.39)
$$0 \equiv \overline{R}'_{i'}\left(\sigma\left(\underline{\Upsilon}_\xi\left(\Gamma_{k+1}(z_{(k+1)})\right)\right),\, J_t^{\ell_0} h\left(\underline{\Upsilon}_\xi\left(\Gamma_{k+1}(z_{(k+1)})\right)\right) \,:\, \overline{h}\left(\underline{\Upsilon}_\xi\left(\Gamma_{k+1}(z_{(k+1)})\right)\right)\right),$$

dans $\mathbb{C}[\![z_{(k+1)},\, \xi]\!]$ pour $i' = 1, \ldots, n'$. Appliquons la dérivation $\partial_{\xi_j}\partial_\xi^{\delta_1}(\cdot)\big|_{\xi=0}$ à (6.39), ce qui revient à appliquer $\underline{\Upsilon}_j\underline{\Upsilon}^{\delta_1}(\cdot)|_{\xi=0}$. Nous obtenons un polynôme (compliqué) dont nous extrayons seulement le terme que nous considérons comme principal ; ainsi nous résumons le résultat du calcul sous la forme :

(6.40)
$$\begin{cases} 0 \equiv b'_{i',\,\delta_1,\,j}(z_{(k+1)}) + \\ \qquad + \displaystyle\sum_{i'_1=1}^{n'} \frac{\partial \overline{R}_{i'}}{\partial \overline{t}'_{i'_1}}\left(\Gamma_{k+1}(z_{(k+1)}),\, J_t^{\ell_0} h\left(\Gamma_k(z_{(k)})\right) \,:\, \overline{h}\left(\Gamma_{k+1}(z_{(k+1)})\right)\right) \cdot \\ \qquad\qquad\qquad\qquad\qquad\qquad\qquad\qquad \cdot \left[\Upsilon_j \Upsilon^{\delta_1}\overline{h}\right]\left(\Gamma_{k+1}(z_{(k+1)})\right), \end{cases}$$

pour $i' = 1, \ldots, n'$, où le terme $b'_{i',\,\delta_1,\,j}(z_{(k+1)})$ est le «reste» qui incorpore tous les termes qui apparaissent, excepté celui qui est écrit à droite du signe «+». Nous affirmons que $b'_{i',\,\delta_1,\,j}(z_{(k+1)})$ est convergent.

En effet, le terme $b'_{i',\,\delta_1,\,j}(z_{(k+1)})$ est un polynôme à coefficients entiers qui contient comme monômes deux catégories de termes. La première catégorie est constituée des dérivées «transversales» suivantes :

$$\left[\underline{\Upsilon}^{\delta_2} h_{i'_2}\right]\left(\Gamma_{k+1}(z_{(k+1)})\right), \tag{6.41}$$

où $i'_2 = 1, \ldots, n'$ et où, de manière cruciale, la longueur de δ_2 satisfait l'inégalité $|\delta_2| \leq \ell$: en effet, le seul terme qui incorpore une dérivée «transversale» d'ordre $\ell + 1$ est celui qui est écrit à droite du signe «+» dans (6.40). Grâce à l'hypothèse de récurrence, tous les termes (6.41) convergent. La deuxième catégorie de termes est consitutée des dérivées partielles suivantes de $\overline{R}_{i'}$:

(6.42)
$$\begin{cases} \left[\dfrac{\partial^{\eta_2}}{\partial t'_{i''(1)} \cdots \partial t'_{i''(\eta_2)}}\, \dfrac{\partial^{\varepsilon_2}}{\partial\left(\partial_t^{\alpha(1)} h_{i'(1)}\right) \cdots \partial\left(\partial_t^{\alpha(\varepsilon_2)} h_{i'(\varepsilon_2)}\right)} \underline{\Upsilon}^{\delta_2}\left(\overline{R}_{i'}\right)\right] \\ \qquad\qquad \left(\Gamma_{k+1}(z_{(k+1)}),\, J_t^{\ell_0} h\left(\Gamma_k(z_{(k)})\right) \,:\, \overline{h}\left(\Gamma_{k+1}(z_{(k+1)})\right)\right) \end{cases}$$

(dans cette expression, la deuxième ligne désigne l'argument de la première ligne), où $1 \leq i''(1), \ldots, i''(\eta_2) \leq n'$, où $\alpha(1), \ldots, \alpha(\varepsilon_2) \in \mathbb{N}^n$, où $1 \leq i'(1), \ldots, i'(\varepsilon_2) \leq n'$ et où $\eta_2 + \varepsilon_2 + \delta_2 + \leq \ell + 1$. Grâce à l'hypothèse de

récurrence (il s'agit en fait de l'hypothèse de récurrence qui porte sur k et non sur ℓ), les termes (6.42) convergent aussi.

Puisque $b'_{i',\delta_1,j}(z_{(k+1)})$ converge et puisque le déterminant (6.38) est convergent et ne s'annule pas identiquement, le Lemme (6.24) s'applique. Nous en déduisons que $\underline{\Upsilon}_j \underline{\Upsilon}^{\delta_1} \overline{h}_{i'_1}\left(\Gamma_{k+1}(z_{(k+1)})\right) \in \mathbb{C}\{z_{(k+1)}\}$ pour $j = 1, \ldots, d$, $|\delta_1| \leq \ell$ et $i' = 1, \ldots, n'$: c'est la propriété (6.36) au niveau $|\delta| = \ell + 1$.

Ceci complète la démonstration du Lemme 6.34. □

La Proposition 6.4 est démontrée. □

§7. Convergence de l'application de réflexion CR formelle

7.1. Préliminaire. Cette dernière section est consacrée à démontrer le Théorème 1.23. Contrairement aux deux précédentes démonstrations, nous ne pourrons pas ramener les raisonnements à la seule considération des composantes de h : il nous faudra étudier simultanément le nombre *infini* des composantes $\Theta'_{j',\gamma'}(h(t))$ de l'application de réflexion (1.28). Avertissons dès maintenant le lecteur : la démonstration du Théorème 1.23 *n'est ni courte ni simple* ; ce théorème constitue en effet une avancée substantielle par rapport aux travaux de S.M. Baouendi, P. Ebenfelt et L.-P. Rothschild, dont le principe élémentaire a été exposé dans le §5 ; comme nous l'avons expliqué dans l'Introduction, cette avancée ne se limite pas à à la simple greffe de techniques connues. Pour toutes ces raisons, nous devrons faire preuve dans cette section d'un réel souci d'exposition, afin de présenter nos calculs majeurs de la manière la plus accessible qui soit.

Soit $\chi(t)$ une application formelle et soit $\ell \in \mathbb{N}$. Rappelons que nous notons $J_t^\ell \chi(t)$ son jet d'ordre ℓ. Par exemple, le jet d'ordre ℓ de l'application formelle $\Theta'_{\gamma'}(h(t))$ de $\mathbb{C}^n$ dans $\mathbb{C}^{d'}$ est constitué de toutes les dérivées partielles par rapport à t de l'application formelle composée $t \longmapsto_{\mathscr{F}} \Theta'_{\gamma'}(h(t))$. De même, le jet $J_t^\ell \mathscr{R}'_h(\tau', t)$ s'identifie à : $J_t^\ell \xi' - \sum_{\gamma' \in \mathbb{N}^{m'}} (\zeta')^{\gamma'} J_t^\ell \Theta'_{\gamma'}(h(t))$; ici, pour $\alpha = 0$, la dérivée partielle $\partial_t^\alpha \xi'$ s'identifie à ξ', mais disparaît pour $|\alpha| \geq 1$.

Pour commencer, énonçons ce que fournit la différentiation de l'application formelle composée $t \longmapsto_{\mathscr{F}} \Theta'_{\gamma'}(h(t))$.

Lemme 7.2. Soit $\alpha \in \mathbb{N}^n$. Il existe une application polynomiale universelle Q_α à valeurs dans $\mathbb{C}^{d'}$, linéaire par rapport à son second groupe de variables et ne dépendant que du jet strict d'ordre $|\alpha|$ de h, qui satisfait :

$$\left\{\begin{aligned} \partial_t^\alpha \left[\Theta'_{\gamma'}(h(t))\right] &\equiv Q_\alpha\left(J_t^{|\alpha|} h(t),\ \left[J_{t'}^{|\alpha|} \Theta'_{\gamma'}\right](h(t))\right), \\ 0 &\equiv Q_\alpha\left(J_t^{|\alpha|} h(t),\ 0\right). \end{aligned}\right. \tag{7.3}$$

La propriété d'annulation écrite à la seconde ligne découle de la linéarité par rapport au second groupe de variables ; elle sera utilisée dans la démonstration du Lemme 7.7 ci-dessous. Pour établir cet énoncé, on procède

en raisonnant par récurrence ; la démonstration est élémentaire, puisqu'on ne demande pas l'expression explicite des applications Q_α, inutile pour la suite. Mentionnons toutefois qu'une application de la formule de Faà di Bruno à plusieurs variables fournirait cette expression.

7.4. Estimées de Cauchy. Dans la conclusion du Théorème 1.23, la convergence de l'application de réflexion (1.28) équivaut à deux propriétés bien distinctes :

(i) pour tout $\gamma' \in \mathbb{N}^{m'}$, la série formelle vectorielle $\Theta'_{\gamma'}(h(t)) \in \mathbb{C}\{t\}^{d'}$ converge ;

(ii) il existe des constantes $\sigma > 0$, $C' >$ et $\rho' > 0$ telles que

$$|t| < \sigma \Longrightarrow \left|\Theta'_{\gamma'}(h(t))\right| < C' \left(\rho'\right)^{-|\gamma'|}, \tag{7.5}$$

pour tout $\gamma' \in \mathbb{N}^{m'}$.

La seconde propriété est une *estimée de Cauchy*. Nous souhaitons énoncer dès maintenant qu'elle découle de la première (Lemme 7.7 *infra*). Grâce à cette remarque, nous pourrons nous dispenser dans la suite de toute considération au sujet des estimées de croissance et nous contenter d'établir seulement des propriétés de convergence (*voir* la Proposition principale 7.18 ci-dessous).

Comme dans la Section 6, nous travaillerons avec la chaîne de Segre Γ_k, sans utiliser la chaîne conjuguée $\underline{\Gamma}_k$. Soit une série formelle $\Psi'(t') \in \mathbb{C}[\![t']\!]$ sans terme constant. Nous noterons

$$\left[J_t^\ell \Psi'(h)\right]\left(\Gamma_k(z_{(k)})\right) := \left(\partial_t^\alpha \left[\Psi'(h(t))\right]\big|_{t=\Gamma_k(z_{(k)})}\right)_{|\alpha|\leq \ell} \tag{7.6}$$

le jet de l'application formelle composée $t \longmapsto \Psi'(h(t))$, dans lequel on remplace l'argument t par $\Gamma_k(z_{(k)})$. Dans la suite, nous utiliserons régulièrement des crochets et des grandes parenthèses, en vue d'une clarté maximale ; en effet, loin d'alourdir les calculs, le respect d'un parenthésage rigoureux permettra d'éliminer toute ambiguïté notationnelle. Voici donc l'énoncé qui nous dispensera de mentionner les estimées de Cauchy. Nous travaillerons avec une chaîne de Segre de longueur k arbitraire et avec des jets d'ordre ℓ arbitraire.

Lemme 7.7. Soit $k \in \mathbb{N}$ et $\ell \in \mathbb{N}$. Si k est impair, les propriétés suivantes sont équivalentes :

(1) $\left[J_t^\ell \mathscr{R}'_h\right]\left(\tau',\, \Gamma_k(z_{(k)})\right) \in \mathbb{C}\{\tau',\, z_{(k)}\}^{N_{d',\,n,\,\ell}}$;

(2) pour tout $\gamma' \in \mathbb{N}^{m'}$, on a : $\left[J_t^\ell \Theta'_{\gamma'}(h)\right]\left(\Gamma_k(z_{(k)})\right) \in \mathbb{C}\{z_{(k)}\}^{N_{d',\,n,\,\ell}}$, et il existe des constantes $\sigma > 0$, $C' > 0$ et $\rho' > 0$ telles que

$$|z_{(k)}| < \sigma \Longrightarrow \left|J_t^\ell \Theta'_{\gamma'}\left(h\left(\Gamma_k(z_{(k)})\right)\right)\right| < C' \left(\rho'\right)^{-|\gamma'|} ; \tag{7.8}$$

(3) pour tout $\gamma' \in \mathbb{N}^{m'}$, on a : $\left[J_t^\ell \Theta'_{\gamma'}(h)\right]\left(\Gamma_k(z_{(k)})\right) \in \mathbb{C}\{z_{(k)}\}^{N_{d',\,n,\,\ell}}$.

Si k est pair, on a trois propriétés équivalentes analogues conjuguées, obtenues en rempaçant t par τ, h par $\overline{h}$, $\Theta'_{\gamma'}$ par $\overline{\Theta}'_{\gamma'}$ et $\mathscr{R}'_h(\tau',\, t)$ par $\overline{\mathscr{R}}'_h(t',\, \tau) := w' - \overline{\Theta}'\left(z',\, \overline{h}(\tau)\right)$.

La troisième propriété exprime seulement que le jet d'ordre ℓ de chaque composante $\Theta'_{\gamma'}(h(t))$ de l'application de réflexion converge sur la k-ième chaîne de Segre, sans estimation de Cauchy.

Proof. Puisque

$$J_t^\ell \mathscr{R}'_h\left(\tau',\, \Gamma_k(z_{(k)})\right) = J_t^\ell \xi' - \sum_{\gamma' \in \mathbb{N}^{m'}} (\zeta')^{\gamma'} \, \left[J_t^\ell \Theta'_{\gamma'}(h)\right]\left(\Gamma_k(z_{(k)})\right), \tag{7.9}$$

l'équivalence entre les propriétés **(1)** et **(2)** provient de la théorie élémentaire des fonctions analytiques de plusieurs variables complexes.

L'implication **(2)** $\Rightarrow$ **(3)** est triviale. Réciproquement, supposons que la propriété de convergence $\left[J_t^\ell \Theta'_{\gamma'}(h)\right]\left(\Gamma_k(z_{(k)})\right) \in \mathbb{C}\{z_{(k)}\}^{N_{d',\,n,\,\ell}}$ est satisfaite pour tout $\gamma' \in \mathbb{N}^{m'}$. Notons $\theta'_{\gamma',\,\ell}(z_{(k)}) \in \mathbb{C}\{z_{(k)}\}^{N_{d',\,n,\,\ell}}$ ces séries vectorielles convergentes. L'objectif est d'établir qu'elles satisfont une estimée de Cauchy.

Pour cela, partons des identités formelles vectorielles :

$$0 \equiv \left[J_t^\ell \Theta'_{\gamma'}(h)\right]\left(\Gamma_k(z_{(k)})\right) - \theta'_{\gamma',\,\ell}(z_{(k)}), \tag{7.10}$$

valables dans $\mathbb{C}[\![z_{(k)}]\!]^{N_{d',\,n,\,\ell}}$. Grâce au Lemme 7.2, nous pouvons développer le premier terme :

$$0 \equiv Q_\ell\left(J_t^\ell h\left(\Gamma_k(z_{(k)})\right),\ \left[J_{t'}^\ell \Theta'_{\gamma'}\right]\left(h\left(\Gamma_k(z_{(k)})\right)\right)\right) - \theta'_{\gamma',\,\ell}(z_{(k)}). \tag{7.11}$$

Ces identités sont satisfaites par l'application formelle $J_t^\ell h\left(\Gamma_k(z_{(k)})\right) \in \mathbb{C}[\![z_{(k)}]\!]^{N_{n',\,n,\,\ell}}$. Notons que les identités (7.11) sont en nombre infini, puisque γ' varie dans $\mathbb{N}^{m'}$; heureusement, le Théorème d'approximation 2.4 s'applique dans une telle situation, grâce à la remarque qui suit son énoncé. Dans le Théorème 2.4, on suppose aussi que toutes les séries formelles considérées s'annulent à l'origine. Ici, $h(0) = 0$, mais le *jet strict* de h d'ordre ℓ à lorigine (*i.e.* toutes les dérivées partielles $\partial_t^{\alpha_1} h_{i'_1}(0)$, pour $1 \leq |\alpha_1| \leq \ell$ et pour $1 \leq i_1 \leq n'$) ne s'annule pas forcément. Heureusement, en soustrayant de l'équation vectorielle (7.11) l'équation vectorielle (7.11) prise en $z_{(k)} = 0$, on se ramène à des séries formelles qui sont toutes sans terme constant.

En appliquant donc le Théorème 2.4 à (7.11) avec l'ordre d'approximation $N = 1$, nous déduisons qu'il existe une application convergente $\mathsf{H}_\ell\left(z_{(k)}\right) \in \mathbb{C}\{z_{(k)}\}^{N_{n',\,n,\,\ell}}$, que nous écrirons sous forme développée comme suit : $\mathsf{H}_\ell\left(z_{(k)}\right) = \left(\mathsf{H}_\alpha\left(z_{(k)}\right)\right)_{|\alpha| \leq \ell}$, telle que $\mathsf{H}_\ell(0) = J_t^\ell h(0)$ et telle que les équations formelles suivantes sont satisfaites :

$$0 \equiv Q_\ell\left(\mathsf{H}_\ell\left(z_{(k)}\right),\ \left[J_{t'}^\ell \Theta'_{\gamma'}\right]\left(\mathsf{H}_0\left(z_{(k)}\right)\right)\right) - \theta'_{\gamma',\,\ell}(z_{(k)}). \tag{7.12}$$

Utilisons maintenant les estimées de Cauchy satisfaites par le jet d'ordre ℓ, par rapport à t', de la série définissante $\Theta'(\zeta',\, t') = \sum_{\gamma' \in \mathbb{N}^{m'}} (\zeta')^{\gamma'}\, \Theta'_{\gamma'}(t')$: il existe des constantes $\sigma' > 0$, $\widetilde{C}' > 0$ et $\rho' > 0$ telles que

$$|t'| < \sigma' \Longrightarrow \left|J_{t'}^\ell \Theta'_{\gamma'}(t')\right| < \widetilde{C}'\,(\rho')^{-|\gamma'|}. \tag{7.13}$$

Soit $\sigma > 0$ suffisamment petit pour que $\mathsf{H}_\ell\left(\Gamma_k(z_{(k)})\right)$ converge dans le cube $\square_\sigma^{km} = \{z_{(k)} \in \mathbb{C}^{km} : \left|z_{(k)}\right| < \sigma$, et pour que $|z_{(k)}| < \sigma$ implique $\left|\mathsf{H}_\ell\left(z_{(k)}\right) - J_t^\ell h(0)\right| < \sigma'$, et en particulier $\left|\mathsf{H}_0\left(z_{(k)}\right)\right| < \sigma'$. On en déduit :

$$|z_{(k)}| < \sigma \Longrightarrow \left|\left[J_{t'}^\ell \Theta'_{\gamma'}\right]\left(\mathsf{H}_0\left(z_{(k)}\right)\right)\right| < \widetilde{C}'\,(\rho')^{-|\gamma'|}. \tag{7.14}$$

Enfin, en utilisant le fait que l'application polynomiale Q_ℓ est linéaire par rapport à son second groupe de variables et en majorant les coefficients de cette expression linéaire, qui sont des polynômes par rapport aux variables $\mathsf{H}_{i'_1,\alpha_1}\left(z_{(k)}\right)$, pour $1 \leq |\alpha_1| \leq |\alpha|$ et pour $i'_1 = 1, \ldots, n'$, on vérifie qu'il existe une constante $C' \geq \widetilde{C}'$ telle que

$$|z_{(k)}| < \sigma \Longrightarrow \left|Q_\ell\left(\mathsf{H}_\ell\left(z_{(k)}\right),\ \left[J_{t'}^\ell \Theta'_{\gamma'}\right]\left(\mathsf{H}_0\left(z_{(k)}\right)\right)\right)\right| < C'\,(\rho')^{-|\gamma'|}. \tag{7.15}$$

Grâce à l'identité (7.12), on en déduit l'estimation de Cauchy désirée :

$$|z_{(k)}| < \sigma \Longrightarrow \left|\theta'_{\gamma',\,\ell}(z_{(k)})\right| < C'\,(\rho')^{-|\gamma'|}. \tag{7.16}$$

Ceci complète la démonstration du Lemme 7.7. $\square$

7.17. Énoncé de la proposition principale. Grâce au Lemme 7.7, nous ramenons la démonstration du Théorème 1.23 à des énoncés de convergence pour les jets des composantes de l'application de réflexion.

Proposition 7.18. *Pour tout $k \in \mathbb{N}$, tout $\ell \in \mathbb{N}$, les propriétés de convergence suivantes sont satisfaites* :

(1) si k est impair, *pour tout $\gamma' \in \mathbb{N}^{m'}$, on a* :

$$\left[J_t^\ell \Theta'_{\gamma'}(h)\right]\left(\Gamma_k\left(z_{(k)}\right)\right) \in \mathbb{C}\{z_{(k)}\}^{N_{d',\,n,\,\ell}}\ ; \tag{7.19}$$

(2) si k pair, *pour tout $\gamma' \in \mathbb{N}^{m'}$, on a* :

$$\left[J_\tau^\ell \overline{\Theta}'_{\gamma'}(\overline{h})\right]\left(\Gamma_k\left(z_{(k)}\right)\right) \in \mathbb{C}\{z_{(k)}\}^{N_{d',\,n,\,\ell}}. \tag{7.20}$$

Cette proposition implique le Théorème 1.23, grâce au Lemme 7.7 et grâce au Lemme 3.32. Notons que pour k et ℓ fixés, il y a une infinité de propriétés de convergence dans (7.19) et dans (7.20) (*cf.* le §1.42). De plus, rappelons qu'en vertu de (6.8), on a :

$$\begin{cases} \left[J_\tau^\ell \overline{\Theta}'_{\gamma'}\left(\overline{h}\right)\right]\left(\Gamma_k\left(z_{(k)}\right)\right) \equiv \left[J_\tau^\ell \overline{\Theta}'_{\gamma'}\left(\overline{h}\right)\right]\left(\Gamma_{k-1}\left(z_{(k-1)}\right)\right), & \text{si } k \text{ est impair}\ ; \\ \left[J_t^\ell \Theta'_{\gamma'}\left(h\right)\right]\left(\Gamma_k\left(z_{(k)}\right)\right) \equiv \left[J_t^\ell \Theta'_{\gamma'}\left(h\right)\right]\left(\Gamma_{k-1}\left(z_{(k-1)}\right)\right), & \text{si } k \text{ est pair}. \end{cases} \tag{7.21}$$

Par conséquent, il n'est pas restrictif de supposer k impair dans (7.19) et k pair dans (7.20).

Nous allons d'abord établir la Proposition 7.18 dans le cas $k = 1$, $\ell = 0$ (§7.65), puis dans le cas $k = 1$, ℓ quelconque (§7.88) et puis dans le cas $k = 2$, $\ell = 0$ (§7.122). Ensuite, dans le §7.135 *infra*, nous écrirons la démonstration finale, pour k et ℓ quelconques. Pour commencer, en guise de préliminaire, formulons deux énoncés cruciaux : un principe d'unicité relié à la CR-transversalité de h (§7.22 juste ci-dessous) et un principe de

symétrie entre les identités de réflexion conjuguées (*cf.* le §1.25 *supra* et le Lemme 7.57 *infra*).

7.22. CR-transversalité. Rappelons que l'application CR formelle h est supposée CR-transversale à l'origine. D'après (1.22), cela signifie que si une série formelle $\overline{F}'(\zeta') \in \mathbb{C}[\![\zeta']\!]$ satisfait l'identité

$$\overline{F}'\left(\overline{f}_1\left(\zeta,\,\Theta(\zeta,\,0)\right),\,\ldots,\,\overline{f}_{m'}\left(\zeta,\,\Theta(\zeta,\,0)\right)\right) \equiv 0, \tag{7.23}$$

dans $\mathbb{C}[\![\zeta]\!]$, elle doit s'annuler identiquement. Analysons cette hypothèse.

Pour tout $\gamma' \in \mathbb{N}^{m'}$, développons la puissance $\overline{f}^{\gamma'}$, restreinte à la première chaîne de Segre conjuguée $\underline{\Gamma}_1(\zeta) = (0,\,0,\,\zeta,\,\Theta(\zeta,\,0))$, par rapport aux puissances de ζ, ce qui nous donne :

$$\overline{f}^{\gamma'}(\zeta,\,\Theta(\zeta,\,0)) =: \sum_{\beta\in\mathbb{N}^m} \overline{f}_{\gamma',\,\beta}\,\frac{\zeta^\beta}{\beta!}\,, \tag{7.24}$$

avec certains coefficients $\overline{f}_{\gamma',\,\beta} \in \mathbb{C}$. Puisque $\overline{f}(0) = 0$, la puissance $\overline{f}^{\gamma'}$ s'annule à l'ordre $|\gamma'|$ à l'origine ; nous en déduisons :

$$\overline{f}_{\gamma',\,\beta} = 0, \qquad \text{pour tout } \gamma' \text{ tel que } |\gamma'| > |\beta|. \tag{7.25}$$

Développons aussi la série $\overline{F}'(\zeta') =: \sum_{\gamma'\in\mathbb{N}^{m'}} \overline{F}'_{\gamma'} \cdot (\zeta')^{\gamma'}$, où $\overline{F}'_{\gamma'} \in \mathbb{C}$. Remplaçons $(\zeta')^{\gamma'}$ par (7.24) dans le développement de $\overline{F}'(\zeta')$, ce qui donne la double somme :

$$\sum_{\beta\in\mathbb{N}^m} \frac{\zeta^\beta}{\beta!}\left(\sum_{\gamma'\in\mathbb{N}^{m'}} \overline{F}'_{\gamma'}\,\overline{f}_{\gamma',\,\beta}\right). \tag{7.26}$$

Grâce à la propriété (7.25), pour tout $\beta \in \mathbb{N}^m$, la somme entre parenthèses dans (7.26) est finie : ces coefficients existent et la double somme a un sens. Nous en déduisons que l'hypothèse de CR-transversalité se traduit par l'implication concrète :

$$\left\{\begin{array}{c} \left(\forall\,\beta \in \mathbb{N}^m \;:\; \displaystyle\sum_{\gamma'\in\mathbb{N}^{m'}} \overline{F}'_{\gamma'}\,\overline{f}'_{\gamma',\,\beta} = 0\right) \\ \Downarrow \\ \left(\overline{F}'_{\gamma'} = 0, \quad \forall\,\gamma' \in \mathbb{N}^{m'}\right). \end{array}\right. \tag{7.27}$$

Cette implication peut s'interpréter en disant que le système linéaire homogène infini écrit à la première ligne de (7.27) est de noyau nul.

7.28. Notation pour les dérivations CR. Soit $\underline{\mathscr{L}}^\beta$ la dérivation CR définie par (1.30). Rappelons que différentier (7.24) par rapport à ζ_k revient à appliquer la dérivation $\underline{\mathscr{L}}_k$, prise en $(\zeta,\,t) = (\zeta,\,0)$. En posant $\zeta = 0$, nous en déduisons :

$$\underline{\mathscr{L}}^\beta \overline{f}^{\gamma'}(0) = \overline{f}_{\gamma',\,\beta}. \tag{7.29}$$

Avant de poursuivre, effectuons une remarque importante. L'application formelle $\overline{f}(\tau)$ ne dépend que de τ. Mais lorsqu'on lui applique la dérivation $\underline{\mathscr{L}}^{\beta}$, dont les coefficients dépendent de t et de τ (*voir* (3.12)), on obtient une expression qui dépend de t et de τ, à moins que $\beta = 0$. Aussi, pour être précis et seulement lorsque cela sera nécessaire, nous n'écrirons pas $\underline{\mathscr{L}}^{\beta}\overline{f}^{\gamma'}(\tau)$, mais $\underline{\mathscr{L}}^{\beta}\overline{f}^{\gamma'}(t,\, \tau)$, ou, de manière équivalente $\underline{\mathscr{L}}^{\beta}\overline{f}^{\gamma'}(z,\, w,\, \zeta,\, \xi)$. Voici l'information utile concernant le développement de ces expressions.

Lemme 7.30. Pour tout $\beta \in \mathbb{N}^m$, il existe un polynôme universel $\overline{Q}_{\beta}$, linéaire par rapport à son second groupe de variables, tel que l'identité formelle suivante est satisfaite :

$$\underline{\mathscr{L}}^{\beta}\overline{f}^{\gamma'}(t,\, \tau) \equiv \overline{Q}_{\beta}\left(J_{\zeta}^{|\beta|}\Theta(\zeta,\, t),\ J_{\tau}^{|\beta|}\overline{f}^{\gamma'}(\tau)\right), \tag{7.31}$$

dans $\mathbb{C}[\![t,\, \tau]\!]$, pour tout $\gamma' \in \mathbb{N}^{m'}$.

On établit ce lemme grâce à une récurrence élémentaire sur le multiindice $\beta \in \mathbb{N}^m$.

7.32. Principe d'unicité. Restreignons (7.31) à la première chaîne de Segre $\Gamma_1(z_1) = \big(z_1,\, \overline{\Theta}(z_1,\, 0),\, 0,\, 0\big)$, où $z_1 \in \mathbb{C}^m$, ce qui donne :

$$\underline{\mathscr{L}}^{\beta}\overline{f}^{\gamma'}\left(z_1,\, \overline{\Theta}(z_1,\, 0),\, 0,\, 0\right) \equiv \overline{Q}_{\beta}\left(J_{\zeta}^{|\beta|}\Theta\left(0,\, z_1,\, \overline{\Theta}(z_1,\, 0)\right),\ J_{\tau}^{|\beta|}\overline{f}^{\gamma'}(0)\right). \tag{7.33}$$

Puisque le polynôme $\overline{Q}_{\beta}$ est linéaire par rapport à son second groupe de variables, on a : $\overline{Q}_{\beta}\left(J_{\zeta}^{|\beta|}\Theta,\, 0\right) = 0$. En outre, puisque $\overline{f}(0) = 0$, on a : $J_{\tau}^{|\beta|}\overline{f}^{\gamma'}(0) = 0$ pour tout γ' tel que $|\gamma'| > |\beta|$. Il découle de ces deux observations et de (7.33) que :

$$\underline{\mathscr{L}}^{\beta}\overline{f}^{\gamma'}\left(z_1,\, \overline{\Theta}(z_1,\, 0),\, 0,\, 0\right) \equiv 0, \qquad \text{pour tout } \gamma' \text{ tel que } |\gamma'| > |\beta|. \tag{7.34}$$

Pour tout $\gamma' \in \mathbb{N}^{m'}$, supposons donnée une série formelle arbitraire $\overline{F}_{\gamma'}(z_1) \in \mathbb{C}[\![z_1]\!]$. Grâce à (7.34), pour tout $\beta \in \mathbb{N}^m$, la somme infinie de produits de séries formelles définie par :

$$\sum_{\gamma' \in \mathbb{N}^{m'}} \underline{\mathscr{L}}^{\beta}\overline{f}^{\gamma'}\left(z_1,\, \overline{\Theta}(z_1,\, 0),\, 0,\, 0\right) \cdot \overline{F}_{\gamma'}(z_1), \tag{7.35}$$

est en fait une somme finie ; par conséquent, elle possède un sens en tant que série formelle. Nous pouvons maintenant formuler le principe d'unicité qui nous sera précieux pour la démonstration de la Proposition 7.18. Rappelons que h est CR-transversale à l'origine, ce qui se traduit par l'implication (7.27).

Lemme 7.36. L'implication plus générale suivante est satisfaite :
(7.37)
$$\left\{\begin{array}{c}\left(\forall\,\beta\in\mathbb{N}^m\ :\quad 0\equiv\displaystyle\sum_{\gamma'\in\mathbb{N}^{m'}}\underline{\mathscr{L}}^{\beta}\overline{f}^{\gamma'}\big(z_1,\,\overline{\Theta}(z_1,\,0),\,0,\,0\big)\cdot\overline{F}_{\gamma'}(z_1)\right)\\ \Downarrow\\ \Big(\overline{F}_{\gamma'}(z_1)\equiv 0,\quad\forall\,\gamma'\in\mathbb{N}^{m'}\Big)\,.\end{array}\right.$$

Proof. Les arguments sont élémentaires. En revenant à (7.29), observons que $\underline{\mathscr{L}}^{\beta}\overline{f}^{\gamma'}\,(0,\,0,\,0,\,0)=\overline{f}_{\gamma',\beta}$. Par conséquent, on peut écrire

$$\underline{\mathscr{L}}^{\beta}\overline{f}^{\gamma'}\big(z_1,\,\overline{\Theta}(z_1,\,0),\,0,\,0\big)=\overline{f}_{\gamma',\beta}+\sum_{\gamma\in\mathbb{N}^m,\,|\gamma|\geq 1}\overline{f}_{\gamma',\beta,\gamma}\,z_1^{\gamma},\tag{7.38}$$

avec certains coefficients $\overline{f}_{\gamma',\beta,\gamma}\in\mathbb{C}$. De même, développons chaque série formelle

$$\overline{F}_{\gamma'}(z_1)=:\sum_{\gamma\in\mathbb{N}^m}\overline{F}_{\gamma',\gamma}\,z_1^{\gamma},\tag{7.39}$$

où $\overline{F}_{\gamma',\gamma}\in\mathbb{C}$, et réécrivons la première ligne de (7.37) :
(7.40)
$$\forall\,\beta\in\mathbb{N}^m\ :\quad 0\equiv\sum_{\gamma'\in\mathbb{N}^{m'}}\left(\overline{f}_{\gamma',\beta}+\sum_{\gamma\in\mathbb{N}^m,\,|\gamma|\geq 1}\overline{f}_{\gamma',\beta,\gamma}\,z_1^{\gamma}\right)\cdot\left(\sum_{\gamma\in\mathbb{N}^m}\overline{F}_{\gamma',\gamma}\,z_1^{\gamma}\right).$$

En posant tout d'abord $z_1=0$, on obtient les équations linéaires :

$$\forall\,\beta\in\mathbb{N}^m\ :\quad 0=\sum_{\gamma'\in\mathbb{N}^{m'}}\overline{f}_{\gamma',\beta}\cdot\overline{F}_{\gamma',0},\tag{7.41}$$

qui impliquent immédiatement que $\overline{F}_{\gamma',0}=0$, pour tout $\gamma'\in\mathbb{N}^{m'}$, grâce à l'implication (7.27). Soit $\ell\in\mathbb{N}$. En raisonnant par récurrence sur la longueur des multiindices γ, supposons que l'on a : $\overline{F}_{\gamma',\gamma_2}=0$, pour tout multiindice $\gamma_2\in\mathbb{N}^m$ tel que $|\gamma_2|\leq\ell$ et pour tout multindice $\gamma'\in\mathbb{N}^{m'}$. Dans (7.40), la somme du second terme du produit commence alors pour $|\gamma|\geq\ell$. Soit $\gamma_1\in\mathbb{N}^m$ un multiindice arbitraire de longueur $\ell+1$. En annulant le coefficient de $z_1^{\gamma_1}$ dans (7.40), on trouve les équations linéaires

$$\forall\,\beta\in\mathbb{N}^m\ :\quad 0=\sum_{\gamma'\in\mathbb{N}^{m'}}\overline{f}_{\gamma',\beta}\cdot\overline{F}_{\gamma',\gamma_1},\tag{7.42}$$

qui impliquent immédiatement que $\overline{F}_{\gamma',\gamma_1}=0$, pour tout $\gamma'\in\mathbb{N}^{m'}$, en utilisant de nouveau (7.27). Ceci complète la démonstration. □

7.43. Combinatoire d'identités conjuguées. Avant d'amorcer la démonstration de la Proposition 7.18, notre objectif sera d'analyser le lien qui existe entre les quatre identités de réflexion (1.31) et (1.32). À partir de

maintenant, nous devrons en effet utiliser de manière exhaustive les relations qui existent entre les objets analytico-géométriques introduits jusqu'à présent, et leurs conjugués.

Comme dans le §1.15, posons $r(t,\,\tau) := \xi - \Theta(\zeta,\,t)$ et $\overline{r}(\tau,\,t) := w - \overline{\Theta}(z,\,\tau)$. De même, posons $r'\,(t',\,\tau') := \xi' - \Theta'\,(\zeta',\,t')$ et $\overline{r}'\,(\tau',\,t') := w' - \overline{\Theta}'\,(z',\,\tau')$. Rappelons (*cf.* (3.7)) qu'il existe deux matrices inversibles $a(t,\,\tau)$ et $a'\,(t',\,\tau')$ de séries formelles convergentes, de taille $d \times d$ et $d' \times d'$, telles qu'on a les quatre identités formelles vectorielles suivantes, conjuguées par paires verticales :

(7.44)
$$\begin{cases} \overline{r}(\tau,\,t) \equiv a(t,\,\tau)\,r(t,\,\tau), & \overline{r}'\,(\tau',\,t') \equiv a'\,(t',\,\tau')\;r'\,(t',\,\tau')\,, \\ r(t,\,\tau) \equiv \overline{a}(\tau,\,t)\,\overline{r}(\tau,\,t), & r'(t',\,\tau') \equiv \overline{a}'\,(\tau',\,t')\;\overline{r}'\,(\tau',\,t')\,, \end{cases}$$

dans $\mathbb{C}[\![t,\,\tau]\!]^d$ et dans $\mathbb{C}[\![t',\,\tau']\!]^{d'}$. Par hypothèse (*cf.* le §1.15), il existe une matrice $b(t,\,\tau)$ de taille $d' \times d$ de séries formelles telle que $r'\,\big(h(t),\,\overline{h}(\tau)\big) \equiv b(t,\,\tau)\,r(t,\,\tau)$. Respectons la combinatoire sous-jacente : ce n'est pas une, mais quatre identités fondamentales, toutes équivalentes entre elles, qu'il nous faut écrire :

(7.45)
$$\begin{cases} r'\,\big(h(t),\,\overline{h}(\tau)\big) \equiv b(t,\,\tau)\,r(t,\,\tau), & \overline{r}'\,\big(\overline{h}(\tau),\,h(t)\big) \equiv c(t,\,\tau)\,r(t,\,\tau), \\ \overline{r}'\,\big(\overline{h}(\tau),\,h(t)\big) \equiv \overline{b}(\tau,\,t)\,\overline{r}(\tau,\,t), & r'\,\big(h(t),\,\overline{h}(\tau)\big) \equiv \overline{c}(\tau,\,t)\,\overline{r}(\tau,\,t). \end{cases}$$

Ici, nous avons posé $c(t,\,\tau) := \overline{b}(\tau,\,t)\,a(t,\,\tau)$. Pour $(t,\,\tau) \in \mathscr{M}$, on a $r(t,\,\tau) = 0$ et $\overline{r}(\tau,\,t) = 0$. En partant des quatre identités (7.45), on pourrait penser qu'il ne reste alors que deux égalités

$$r'\,\big(h(t),\,\overline{h}(\tau)\big) = 0 \qquad \text{et} \qquad \overline{r}'\,\big(\overline{h}(\tau),\,h(t),\big) = 0. \tag{7.46}$$

lorsque $(t,\,\tau) \in \mathscr{M}$, mais on se méprendrait alors sur la véritable nature des choses : en effet, dire que $(t,\,\tau) \in \mathscr{M}$ revient à dire que $w = \overline{\Theta}(z,\,\tau)$ ou que $\xi = \Theta(\zeta,\,t)$, et par conséquent, en remplaçant w et ξ par ces deux valeurs possibles dans les deux égalités (7.46), on obtient quatre identités formelles vectorielles :

(7.47)
$$\begin{cases} r'\,\big(h(t),\,\overline{h}(\zeta,\,\Theta(\zeta,\,t))\big) \equiv 0, & \overline{r}'\,\big(\overline{h}(\zeta,\,\Theta(\zeta,\,t)),\,h(t)\big) \equiv 0, \\ \overline{r}'\,\big(\overline{h}(\tau),\,h\,\big(z,\,\overline{\Theta}(z,\,\tau)\big)\big) \equiv 0, & r'\,\big(h\,\big(z,\,\overline{\Theta}(z,\,\tau)\big)\,,\,\overline{h}(\tau)\big) \equiv 0, \end{cases}$$

qui ne sont autres, dans le même ordre, que les quatre relations (7.45) restreintes à $\mathscr{M}$. À nouveau, elles sont conjuguées par paires verticales.

Venons-en maintenant aux identités de réflexion. Rappelons que les champs de vecteurs $\mathscr{L}_k$ et $\underline{\mathscr{L}}_k$ définis par (3.12) satisfont $\mathscr{L}_k\,\overline{r}(\tau,\,t) \equiv 0$ et $\underline{\mathscr{L}}_k\,r(t,\,\tau) \equiv 0$. En appliquant ces dérivations à la première colonne de (7.44), nous en déduisons que $\underline{\mathscr{L}}_k\,\overline{r}(\tau,\,t) \equiv \underline{\mathscr{L}}_k\,a(t,\,\tau)\cdot r(t,\,\tau)$ et que $\mathscr{L}_k\,r(t,\,\tau) \equiv \mathscr{L}_k\,\overline{a}(\tau,\,t)\cdot\overline{r}(\tau,\,t)$. Par conséquent, nous avons $\underline{\mathscr{L}}_k\,\overline{r}(\tau,\,t) = 0$ et $\mathscr{L}_k\,r(t,\,\tau) = 0$, pour $(t,\,\tau) \in \mathscr{M}$, mais pas d'identité formelle dans $\mathbb{C}[\![t,\,\tau]\!]^d$. Plus généralement, pour tout multindice $\beta \in \mathbb{N}^m$ et pour

$(t,\,\tau)\in\mathscr{M}$, nous avons les quatre relations :

$$\text{(7.48)}\qquad \begin{cases} \mathscr{L}^\beta\, r(t,\,\tau) \;=0, & \qquad \mathscr{L}^\beta\, \overline{r}(\tau,\,t) \;=\; 0,\\ \underline{\mathscr{L}}^\beta\, \overline{r}(\tau,\,t) \;=0, & \qquad \underline{\mathscr{L}}^\beta\, r(t,\,\tau) \;=\; 0, \end{cases}$$

satisfaites pour $(t,\,\tau)\in\mathscr{M}$. Lorsque le multiindice β est de longueur strictement positive, les relations de la deuxième colonne sont des identités formelles vectorielles dans $\mathbb{C}[\![t,\,\tau]\!]^d$. Cette remarque ne sera pas utilisée dans la suite.

En appliquant les dérivations $\mathscr{L}^\beta$ et $\underline{\mathscr{L}}^\beta$ aux deux relations (7.46), nous obtenons les quatre identités de réflexion (1.31) et (1.32) de l'Introduction :

$$\text{(7.49)}\qquad \begin{cases} 0 \;=\underline{\mathscr{L}}^\beta\, r'\left(h(t),\,\overline{h}(\tau)\right), & \qquad 0 \;=\underline{\mathscr{L}}^\beta\, \overline{r}'\left(\overline{h}(\tau),\,h(t)\right),\\ 0 \;=\mathscr{L}^\beta\, \overline{r}'\left(\overline{h}(\tau),\,h(t)\right), & \qquad 0 \;=\mathscr{L}^\beta\, r'\left(h(t),\,\overline{h}(\tau)\right), \end{cases}$$

où β parcourt $\mathbb{N}^m$, avec $(t,\,\tau)\in\mathscr{M}$, comme à l'accoutumée. La première ligne de (7.49) coïncide avec (1.31) ; la deuxième ligne, avec (1.32).

Pour obtenir ces quatre identités de réflexion, on peut procéder d'une manière très légèrement différente en partant des quatre identités formelles (7.47). En effet, rappelons que le fait de différentier une série $\overline{\psi}\left(z,\,\overline{\Theta}(z,\,\tau)\right)$ par rapport à z^β revient à appliquer la dérivation $\mathscr{L}^\beta$ à $\overline{\psi}$ (*cf.* aussi (4.12)). Ainsi, en différentiant les quatre identités formelles (7.47) par rapport à z^β ou par rapport à ζ^β, nous obtenons quatre familles infinies d'identités formelles :

(7.50)

$$\begin{cases} 0 \;\equiv\underline{\mathscr{L}}^\beta\, r'\left(h(t),\,\overline{h}(\zeta,\,\Theta(\zeta,\,t))\right), & \qquad 0\equiv\underline{\mathscr{L}}^\beta\, \overline{r}'\left(\overline{h}(\zeta,\,\Theta(\zeta,\,t)),\,h(t)\right),\\ 0 \;\equiv\mathscr{L}^\beta\, \overline{r}'\left(\overline{h}(\tau),\,h\left(z,\,\overline{\Theta}(z,\,0)\right)\right), & \qquad 0\equiv\mathscr{L}^\beta\, r'\left(h\left(z,\,\overline{\Theta}(z,\,0)\right),\,\overline{h}(\tau)\right), \end{cases}$$

satisfaites pour tout $\beta\in\mathbb{N}^m$. Elles coïncident avec (7.49).

7.51. Équivalence entre les identités de réflexion. Maintenant, vérifions que ces quatre familles infinies d'identités sont équivalentes entre elles. Les deux membres de chaque colonne de (7.49) (ou de (7.50)) sont conjugués entre eux, donc équivalents. Pour démontrer que les deux familles infinies écrites à la première ligne de (7.49) (ou de (7.50)) sont équivalentes, partons des deux identités formelles :

$$\text{(7.52)}\qquad \begin{cases} r'\left(h(t),\,\overline{h}(\tau)\right) \;\equiv\overline{a}'\left(\overline{h}(\tau),\,h(t)\right)\,\overline{r}'\left(\overline{h}(\tau),\,h(t)\right),\\ \overline{r}'\left(\overline{h}(\tau),\,h(t)\right) \;\equiv a'\left(h(t),\,\overline{h}(\tau)\right)\,r'\left(h(t),\,\overline{h}(\tau)\right), \end{cases}$$

obtenues en remplaçant les variables t' et τ' par $h(t)$ et par $\overline{h}(\tau)$ dans la deuxième colonne de (7.44). Si β et γ sont deux multiindices de $\mathbb{N}^m$, on notera $\gamma\leq\beta$ si $\gamma_k\leq\beta_k$ pour $k=1,\,\ldots,\,m$. Appliquons aux deux identités (7.52) la dérivation $\underline{\mathscr{L}}^\beta$ en tenant compte de la formule de Leibniz, ce

qui donne, en n'écrivant pas les arguments $(t,\,\tau)$ pour alléger les formules :
(7.53)

$$\begin{cases} \underline{\mathscr{L}}^{\beta}\, r'\left(h,\,\overline{h}\right) \;\equiv\; \displaystyle\sum_{\gamma\leq\beta} \frac{\beta!}{\gamma!\,(\beta-\gamma)!}\cdot \underline{\mathscr{L}}^{\beta-\gamma}\left(\overline{a}'\left(\overline{h},\,h\right)\right)\cdot \underline{\mathscr{L}}^{\gamma}\left(\overline{r}'\left(\overline{h},\,h\right)\right), \\ \underline{\mathscr{L}}^{\beta}\,\overline{r}'\left(\overline{h},\,h\right) \;\equiv\; \displaystyle\sum_{\gamma\leq\beta} \frac{\beta!}{\gamma!\,(\beta-\gamma)!}\cdot \underline{\mathscr{L}}^{\beta-\gamma}\left(a'\left(h,\,\overline{h}\right)\right)\cdot \underline{\mathscr{L}}^{\gamma}\left(r'\left(h,\,\overline{h}\right)\right). \end{cases}$$

Grâce à ces relations, nous déduisons immédiatement l'équivalence désirée :

$$\text{(7.54)}\qquad \begin{cases} \left(\forall\,\beta\in\mathbb{N}^m\;:\underline{\mathscr{L}}^{\beta}\, r'\left(h(t),\,\overline{h}(\tau)\right)=0\right) \\ \qquad\qquad\Updownarrow \\ \left(\forall\,\beta\in\mathbb{N}^m\;:\underline{\mathscr{L}}^{\beta}\,\overline{r}'\left(\overline{h}(\tau),\,h(t)\right)=0\right). \end{cases}$$

Ainsi, les quatre familles infinies d'identités de réflexions (7.49) sont équivalentes à une seule d'entre elles.

7.55. Spéculation cruciale. Une telle observation semble maintenant contredire notre affirmation au sujet de la nécessité d'utiliser réellement les deux familles infinies d'identités de réflexion (1.31) (ou leurs conjuguées (1.32)), comme nous l'avons avancé dans le §1.25. En effet, grâce à l'équivalence (7.54), on peut fort bien soutenir qu'il est redondant de mentionner plus d'une famille infinie d'identités de réflexion, les trois autres n'ajoutant aucune relation nouvelle. C'est le point de vue qui est adopté dans toutes les références citées après l'équation (1.30), bien que dans aucun de ces articles, on ne puisse déceler le moindre souci d'établir de telles équivalences. Nous admettrons bien sûr que le point de vue classique est justifié lorsque des hypothèses de finitude telles que **(h1)**, **(h2)**, **(h3)** ou **(h4)**, ou encore, telles que l'algébricité de M', sont ajoutées au problème pour en simplifier l'étude. Mais en revanche, lorsqu'aucune hypothèse particulière de finitude n'est supposée sur la sous-variété générique image M', le fait que l'on différentie $\overline{g}$ et les puissances $\overline{f}^{\gamma'}$ dans la première ligne de (1.31), alors qu'on différentie les composantes $\overline{\Theta}'_{\gamma'}\left(\overline{h}\right)$ de l'application de réflexion CR conjuguée dans la deuxième ligne de (1.31), constitue une différence formelle que nous considérons comme majeure, bien qu'elle soit occultée par l'équivalence (7.54) et qu'on puisse, pour cette raison, la juger comme infime et négligeable. Mentionnons qu'à ce jour, nous ne sommes pas parvenu à construire une seconde démonstration du Théorème 1.23 qui n'utilise pas un jeu alternatif permanent entre chaque couple d'identités de réflexions (1.31) et (1.32)[7]. Le reste de cette section est consacré à expliquer comment doit fonctionner ce jeu alternatif, afin d'établir la Proposition 7.18.

[7]Dans l'article [BMR2002], cette stratégie est empruntée librement, sans référence à nos travaux antérieurs [Me2000], [19] et [Me2001c]. Cependant, dans ledit article, l'approche originale que nous exposons ici est submergée par une technicité quasi-cryptique ; il en découle un manque certain de clarté conceptuelle qui rend cet article hermétique, même du point de vue d'un spécialiste rompu au calcul formel.

7.56. Principe d'équivalence polarisée. Commençons par polariser l'équivalence (7.54). Soit $\nu \in \mathbb{N}$, $\nu \geq 1$, soit $\mathsf{x} \in \mathbb{C}^\nu$ et soient $\mathsf{H}(\mathsf{x}) \in \mathbb{C}[\![\mathsf{x}]\!]^n$ et $\mathsf{Q}(\mathsf{x}) \in \mathbb{C}[\![\mathsf{x}]\!]^{2n}$ deux applications formelles sans terme constant.

Lemme 7.57. L'équivalence suivante est satisfaite :
(7.58)
$$\begin{cases} \Big(\forall\, \beta \in \mathbb{N}^m \ : \underline{\mathscr{L}}^\beta \left[\overline{r}'\left(\overline{h}(\tau),\, \mathsf{H}(\mathsf{x})\right)\right]\big|_{(t,\,\tau)=\mathsf{Q}(\mathsf{x})} \equiv 0, \quad \text{dans } \mathbb{C}[\![\mathsf{x}]\!]^{d'}\Big) \\ \qquad\qquad \Updownarrow \\ \Big(\forall\, \beta \in \mathbb{N}^m \ : \underline{\mathscr{L}}^\beta \left[r'\left(\mathsf{H}(\mathsf{x}),\, \overline{h}(\tau)\right)\right]\big|_{(t,\,\tau)=\mathsf{Q}(\mathsf{x})} \equiv 0, \quad \text{dans } \mathbb{C}[\![\mathsf{x}]\!]^{d'}\Big). \end{cases}$$

Puisque les coefficients des dérivations $\underline{\mathscr{L}}^\beta$ dépendent de t et de τ, et que l'on remplace $(t,\, \tau)$ par $\mathsf{Q}(\mathsf{x})$, ces identités formelles sont à interpréter dans $\mathbb{C}[\![\mathsf{x}]\!]^{d'}$. Une équivalence analogue est vérifiée, en remplaçant $\underline{\mathscr{L}}^\beta$ par $\mathscr{L}^\beta$ et $\overline{h}(\tau)$ par $h(t)$.

Proof. En adaptant l'argument du §7.51 ci-dessus, partons des deux identités formelles conjuguées :

$$\begin{cases} \overline{r}'\left(\overline{h}(\tau),\, \mathsf{H}(\mathsf{x})\right) \ \equiv a'\left(\mathsf{H}(\mathsf{x}),\, \overline{h}(\tau)\right)\, r'\left(\mathsf{H}(\mathsf{x}),\, \overline{h}(\tau)\right), \\ r'\left(\mathsf{H}(\mathsf{x}),\, \overline{h}(\tau)\right) \ \equiv \overline{a}'\left(\overline{h}(\tau),\, \mathsf{H}(\mathsf{x})\right)\, \overline{r}'\left(\overline{h}(\tau),\, \mathsf{H}(\mathsf{x})\right), \end{cases} \tag{7.59}$$

valables dans $\mathbb{C}[\![\tau,\, \mathsf{x}]\!]^{d'}$, que nous obtenons en remplaçant les variables t' et τ' par $\mathsf{H}(\mathsf{x})$ et par $\overline{h}(\tau)$ dans la deuxième colonne de (7.44). Appliquons les dérivations $\underline{\mathscr{L}}^\beta$ et la formule de Leibniz, ce qui donne les identités suivantes, dans $\mathbb{C}[\![t,\, \tau,\, \mathsf{x}]\!]^{d'}$:
(7.60)
$$\begin{cases} \underline{\mathscr{L}}^\beta\, \overline{r}'\left(\overline{h},\, \mathsf{H}\right) \ \equiv \displaystyle\sum_{\beta_1 \leq \beta} \frac{\beta!}{\beta_1!\,(\beta-\beta_1)!} \cdot \underline{\mathscr{L}}^{\beta-\beta_1}\left(a'\left(\mathsf{H},\, \overline{h}\right)\right) \cdot \underline{\mathscr{L}}^{\beta_1}\left(r'\left(\mathsf{H},\, \overline{h}\right)\right), \\ \underline{\mathscr{L}}^\beta\, r'\left(\mathsf{H},\, \overline{h}\right) \ \equiv \displaystyle\sum_{\beta_1 \leq \beta} \frac{\beta!}{\beta_1!\,(\beta-\beta_1)!} \cdot \underline{\mathscr{L}}^{\beta-\beta_1}\left(\overline{a}'\left(\overline{h},\, \mathsf{H}\right)\right) \cdot \underline{\mathscr{L}}^{\beta_1}\left(\overline{r}'\left(\overline{h},\, \mathsf{H}\right)\right). \end{cases}$$

Grâce à ces relations, nous déduisons immédiatement l'équivalence désirée. □

7.61. Écriture définitive des quatre familles d'identités de réflexion. Dorénavant, pour écrire les identités de réflexion (1.13) et (1.32), nous adopterons le principe de notation qui est expliqué au §7.28. Plus précisément, nous les écrirons en respectant un parenthésage rigoureux, en utilisant le signe «·» pour la multiplication, et en faisant apparaître les deux arguments $(t,\, \tau)$ des termes auxquels s'appliquent les différentiations $\underline{\mathscr{L}}^\beta$

et $\mathscr{L}^\beta$, ce qui donne :

$$
(7.62)\qquad \begin{cases}
\left[\underline{\mathscr{L}}^\beta\, \overline{g}_{j'}\right](\tau,\, t) \;=\; \displaystyle\sum_{\gamma'\in\mathbb{N}^{m'}} \left[\underline{\mathscr{L}}^\beta \overline{f}^{\gamma'}\right](\tau,\, t)\cdot \Theta'_{j',\gamma'}(h(t)),\\[2ex]
0 \;=\; \displaystyle\sum_{\gamma'\in\mathbb{N}^{m'}} f(t)^{\gamma'}\cdot \left[\underline{\mathscr{L}}^\beta \overline{\Theta}'_{j',\gamma'}\left(\overline{h}\right)\right](\tau,\, t),\\[2ex]
\left[\mathscr{L}^\beta g_{j'}\right](t,\, \tau) \;=\; \displaystyle\sum_{\gamma'\in\mathbb{N}^{m'}} \left[\mathscr{L}^\beta f^{\gamma'}\right](t,\, \tau)\cdot \overline{\Theta}'_{j',\gamma'}\left(\overline{h}(\tau)\right),\\[2ex]
0 \;=\; \displaystyle\sum_{\gamma'\in\mathbb{N}^{m'}} \overline{f}(\tau)^{\gamma'}\cdot \left[\mathscr{L}^\beta \Theta'_{j',\gamma'}(h)\right](t,\, \tau).
\end{cases}
$$

Ici : $(t,\, \tau) \in \mathscr{M}$; j' satisfait $1 \leq j' \leq d'$; β varie dans $\mathbb{N}^m$. Nous sous-entendons que pour $\beta = 0$, la deuxième ligne de (7.62) coïncide avec la relation non différentiée $g_{j'}(t) = \sum_{\gamma'\in\mathbb{N}^{m'}} f(t)^{\gamma'}\, \overline{\Theta}'_{j',\gamma'}(h(t))$; de même, nous sous-entendrons que la quatrième ligne de (7.62) coïncide avec $\overline{g}_{j'}(\tau) = \sum_{\gamma'\in\mathbb{N}^{m'}} \overline{f}^{\gamma'}(\tau)\, \Theta'_{j',\gamma'}(h(t))$ pour $\beta = 0$.

Le Lemme 7.30 fournit l'expression développée de $\left[\underline{\mathscr{L}}^\beta \overline{f}^{\gamma'}\right](t,\, \tau)$. En raisonnant par récurrence, on établit aussi l'énoncé suivant, utilse dans le §7.65 ci-dessous.

Lemme 7.63. Pour tout $\beta \in \mathbb{N}^m$, il existe un polynôme universel $\overline{P}'_\beta$, linéaire par rapport à son second groupe de variables, tel que l'identité formelle suivante est satisfaite :

$$
(7.64)\qquad \left[\underline{\mathscr{L}}^\beta \overline{\Theta}'_{j',\gamma'}\left(\overline{h}\right)\right](t,\, \tau) \equiv \overline{P}'_\beta\left(J_\zeta^{|\beta|}\Theta(\zeta,\, t),\; J_\tau^{|\beta|}\left[\overline{\Theta}'_{j',\gamma'}\left(\overline{h}(\tau)\right)\right]\right),
$$

dans $\mathbb{C}[\![t,\, \tau]\!]^{d'}$, pour tout $j' = 1,\, \ldots,\, d'$ et tout $\gamma' \in \mathbb{N}^{m'}$.

Pour prévenir une confusion possible, notons que le second argument de $\overline{P}'_\beta$ dans (7.64) n'est pas le jet $\left[J_{\tau'}^{|\beta|}\overline{\Theta}'_{j',\gamma'}\right]\left(\overline{h}(\tau)\right)$, mais le jet d'ordre $|\beta|$ de l'application formelle composée $\tau \longmapsto_{\mathscr{F}} \overline{\Theta}_{j',\gamma'}\left(\overline{h}(\tau)\right)$.

7.65. Convergence des composantes l'application de réflexion sur la première chaîne de Segre. Après ces préliminaires étendus, nous pouvons enfin débuter la démonstration de la Proposition 7.18. Nous allons d'abord établir (7.19) dans le cas $k = 1$, $\ell = 0$. Nous affirmons en effet que pour tout $j' = 1,\, \ldots,\, d'$ et tout $\gamma' \in \mathbb{N}^{m'}$, on a :

$$
(7.66)\qquad \Theta'_{j',\gamma'}\left(h\left(z_1,\, \overline{\Theta}(z_1,\, 0)\right)\right) \in \mathbb{C}\{z_1\}.
$$

Proof. Pour cela, posons $(t,\, \tau) = \left(z_1,\, \overline{\Theta}_1,\, 0,\, 0\right)$ dans la seconde ligne de (7.62), où $|\beta| \geq 1$, ainsi que dans l'identité qui est sous-entendue pour

$\beta = 0$, ce qui nous donne :
(7.67)
$$\begin{cases} g_{j'}\left(z_1,\, \overline{\Theta}(z_1,\, 0)\right) \equiv \displaystyle\sum_{\gamma' \in \mathbb{N}^{m'}} \left[f^{\gamma'}\right]\left(z_1,\, \overline{\Theta}(z_1,\, 0)\right) \cdot \overline{\Theta}'_{j',\gamma'}\left(\overline{h}(0)\right), \\ 0 \equiv \displaystyle\sum_{\gamma' \in \mathbb{N}^{m'}} \left[f^{\gamma'}\right]\left(z_1,\, \overline{\Theta}(z_1,\, 0)\right) \cdot \\ \qquad\qquad \cdot\, \overline{P}'_{\beta}\left(J_{\zeta}^{|\beta|}\Theta\left(0,\, z_1,\, \overline{\Theta}(z_1,\, 0)\right),\; J_{\tau}^{|\beta|}\,\overline{\Theta}'_{j',\gamma'}\left(\overline{h}\right)(0)\right). \end{cases}$$

Ces équations sont analytiques par rapport à z_1, puisque le second groupe d'arguments de $\overline{P}'_{\beta}$ est constant. Elles sont satisfaites par l'application formelle $z_1 \longmapsto_{\mathscr{F}} h\left(z_1,\, \overline{\Theta}(z_1,\, 0)\right)$. En appliquant le Théorème 2.4 avec l'ordre d'approximation $N = 1$, nous déduisons qu'il existe une application convergente $\mathsf{H}(z_1) =: (\mathsf{F}(z_1),\, \mathsf{G}(z_1)) \in \mathbb{C}\{z_1\}^{m'} \times \mathbb{C}\{z_1\}^{d'}$, avec $\mathsf{H}(0) = 0$, qui satisfait les mêmes équations analytiques, *i.e.* :
(7.68)
$$\begin{cases} \mathsf{G}_{j'}(z_1) \equiv \displaystyle\sum_{\gamma' \in \mathbb{N}^{m'}} \mathsf{F}^{\gamma'}(z_1) \cdot \overline{\Theta}'_{j',\gamma'}\left(\overline{h}(0)\right), \\ 0 \equiv \displaystyle\sum_{\gamma' \in \mathbb{N}^{m'}} \mathsf{F}^{\gamma'}(z_1) \cdot \overline{P}'_{\beta}\left(J_{\zeta}^{|\beta|}\Theta\left(0,\, z_1,\, \overline{\Theta}(z_1,\, 0)\right),\; J_{\tau}^{|\beta|}\,\overline{\Theta}'_{j',\gamma'}\left(\overline{h}\right)(0)\right). \end{cases}$$

Notons que ces dernières identités (7.68) coïncident avec les identités de la première ligne de (7.58), si on les écrit avec $\mathsf{x} := z_1$, avec $\mathsf{Q}(\mathsf{x}) := \left(z_1,\, \overline{\Theta}(z_1,\, 0),\, 0,\, 0\right)$ et avec $\mathsf{H}(\mathsf{x}) := \mathsf{H}(z_1)$.

Grâce au principe d'équivalence (7.58)*, nous pouvons donc faire basculer ces identités vers la seconde ligne de* (7.58), ce qui nous donne, pour tout $j' = 1,\, \ldots,\, d'$ et tout $\beta \in \mathbb{N}^{m'}$:
(7.69)
$$\begin{cases} \left[\underline{\mathscr{L}}^{\beta}\,\overline{g}_{j'}\right]\left(z_1,\, \overline{\Theta}(z_1,\, 0),\, 0,\, 0\right) \equiv \displaystyle\sum_{\gamma' \in \mathbb{N}^{m'}} \left[\underline{\mathscr{L}}^{\beta}\overline{f}^{\gamma'}\right]\left(z_1,\, \overline{\Theta}(z_1,\, 0),\, 0,\, 0\right) \cdot \\ \qquad\qquad\qquad\qquad\qquad\qquad \cdot\, \Theta'_{j',\gamma'}(\mathsf{H}(z_1)). \end{cases}$$

Presque miraculeusement, nous voyons apparaître dans (7.69) les applications convergentes $\Theta'_{j',\gamma'}(\mathsf{H}(z_1)) \in \mathbb{C}\{z_1\}$. Puisque ces termes constituent la seule différence par rapport aux identités de réflexion écrites à la première ligne de (7.62) et prises en $(t,\, \tau) = \left(z_1,\, \overline{\Theta}(z_1,\, 0),\, 0,\, 0\right)$, que nous explicitons comme suit :
(7.70)
$$\begin{cases} \left[\underline{\mathscr{L}}^{\beta}\,\overline{g}_{j'}\right]\left(z_1,\, \overline{\Theta}(z_1,\, 0),\, 0,\, 0\right) \equiv \displaystyle\sum_{\gamma' \in \mathbb{N}^{m'}} \left[\underline{\mathscr{L}}^{\beta}\overline{f}^{\gamma'}\right]\left(z_1,\, \overline{\Theta}(z_1,\, 0),\, 0,\, 0\right) \cdot \\ \qquad\qquad\qquad\qquad\qquad\qquad \cdot\, \Theta'_{j',\gamma'}\left(h\left(z_1,\, \overline{\Theta}(z_1,\, 0)\right)\right), \end{cases}$$

soustrayons immédiatement (7.69) de (7.70) :

$$(7.71)\quad \begin{cases} 0 \equiv \displaystyle\sum_{\gamma' \in \mathbb{N}^{m'}} \left[\underline{\mathscr{L}}^{\beta} \overline{f}^{\gamma'}\right] \big(z_1,\, \overline{\Theta}(z_1,\, 0),\, 0,\, 0\big) \cdot \\ \qquad\qquad \cdot \left\{\Theta'_{j',\gamma'}\left(h\left(z_1,\, \overline{\Theta}(z_1,\, 0)\right)\right) - \Theta'_{j',\gamma'}(\mathsf{H}(z_1))\right\}. \end{cases}$$

Pour terminer la démonstration, il ne reste plus qu'à appliquer le principe d'unicité (7.37) (pour chaque j') à ces dernières identités, ce qui fournit les relations :

$$(7.72)\qquad \Theta'_{j',\gamma'}\left(h\left(z_1,\, \overline{\Theta}(z_1,\, 0)\right)\right) \equiv \Theta'_{j',\gamma'}(\mathsf{H}(z_1)).$$

Elles établissent la propriété de convergence annoncée (7.66), pour tout $j' = 1,\, \ldots,\, d'$ et tout $\gamma' \in \mathbb{N}^{m'}$. □

Ainsi, en passant de (7.68) à (7.69), nous avons initié un jeu alternatif entre deux familles d'identités de réflexion, et ce jeu crucial se poursuivra ultérieurement. Puisque les composantes $\Theta'_{j',\gamma'}(\mathsf{H}(z_1))$ n'étaient pas visibles dans (7.68), alors qu'elles sont visibles dans (7.69), nous voyons bien qu'il était nécessaire d'utiliser les deux familles infinies d'identités de réflexion (7.67) et (7.70), bien qu'elles soient «équivalentes» d'après le §7.51. Dans la suite de la démonstration de la Proposition 7.18, nous aurons besoin de généraliser encore l'équivalence (7.58) (*voir* le Lemme 7.110 ci-dessous).

7.73. Convergence des jets des composantes de l'application de réflexion sur la première chaîne de Segre. Cette propriété de convergence constitue le point technique le plus complexe de toute la démonstration. Pour l'expliquer soigneusement, nous ferons alterner l'étude spécifique des calculs formels effectués sur la première chaîne de Segre avec l'énonciation de propriétés formelles générales, valables sur une chaîne de Segre de longueur arbitraire. Ces dernières seront utilisées dans la démonstration finale de la Proposition 7.18, où nous raisonnerons par récurrence sur la longueur des chaînes (*voir* le §7.135), ce qui se fera sans mal, grâce à tous nos préparatifs.

Commençons par énoncer un critère pour la convergence des jets de toutes les composantes de l'application de réflexion $\mathscr{R}'_h$ ou de sa conjuguée $\overline{\mathscr{R}}'_h$ sur les chaînes de Segre. La démonstration, analogue à celle du Lemme 6.9, ne sera pas détaillée.

Lemme 7.74. Soit $\ell \in \mathbb{N}$, soit $k \in \mathbb{N}$ et soit $\Gamma_k(z_{(k)})$ la k-ième chaîne de Segre. Les propriétés suivantes sont équivalentes :

(i) Le jet d'ordre ℓ de chaque composante de l'application de réflexion $\mathscr{R}'_h$ ou de sa conjuguée $\overline{\mathscr{R}}'_h$ converge sur la k-ième chaîne de Segre, *i.e.*, en tenant compte des simplifications (7.21), on a pour tout $\gamma' \in \mathbb{N}^{m'}$:

$$(7.75)\quad \begin{cases} \left[J^{\ell}_t \Theta'_{\gamma'}(h)\right]\big(\Gamma_k(z_{(k)})\big) \in \mathbb{C}\{z_{(k)}\}^{N_{d',n,\ell}} & \text{si } k \text{ est impair}, \\ \left[J^{\ell}_{\tau} \overline{\Theta}'_{\gamma'}\left(\overline{h}\right)\right]\big(\Gamma_k(z_{(k)})\big) \in \mathbb{C}\{z_{(k)}\}^{N_{d',n,\ell}} & \text{si } k \text{ est pair}\ ; \end{cases}$$

(ii) pour tout $\beta \in \mathbb{N}^m$ et tout $\delta \in \mathbb{N}^d$ satisfaisant $|\beta| + |\delta| \leq \ell$, les dérivées suivantes de $\Theta'_{\gamma'}(h)$ ou de $\overline{\Theta}'_{\gamma'}\left(\overline{h}\right)$ convergent pour tout $\gamma' \in \mathbb{N}^{m'}$:

$$\left\{\begin{array}{ll} \left[\mathscr{L}^\beta \Upsilon^\delta \Theta'_{\gamma'}(h)\right]\left(\Gamma_k(z_{(k)})\right) \in \mathbb{C}\{z_{(k)}\}^{d'} & \text{si } k \text{ est impair}, \\ \left[\underline{\mathscr{L}}^\beta \underline{\Upsilon}^\delta \overline{\Theta}'_{\gamma'}\left(\overline{h}\right)\right]\left(\Gamma_k(z_{(k)})\right) \in \mathbb{C}\{z_{(k)}\}^{d'} & \text{si } k \text{ est pair} ; \end{array}\right. \tag{7.76}$$

(iii) pour tout $\delta \in \mathbb{N}^d$ satisfaisant $|\delta| \leq \ell$, les dérivées suivantes de $\Theta'_{\gamma'}(h)$ ou de $\overline{\Theta}'_{\gamma'}\left(\overline{h}\right)$ convergent pour tout $\gamma' \in \mathbb{N}^{m'}$:

$$\left\{\begin{array}{ll} \left[\Upsilon^\delta \Theta'_{\gamma'}(h)\right]\left(\Gamma_k(z_{(k)})\right) \in \mathbb{C}\{z_{(k)}\}^{d'} & \text{si } k \text{ est impair}, \\ \left[\underline{\Upsilon}^\delta \overline{\Theta}'_{\gamma'}\left(\overline{h}\right)\right]\left(\Gamma_k(z_{(k)})\right) \in \mathbb{C}\{z_{(k)}\}^{d'} & \text{si } k \text{ est pair}. \end{array}\right. \tag{7.77}$$

Ainsi, notre objectif est de généraliser la propriété de convergence (7.66) aux jets des composantes de l'application de réflexion. Soit $w_1 \in \mathbb{C}^d$. En nous inspirant de la preuve du Lemme 6.17, remplaçons (t, τ) dans la seconde ligne de (7.62) par la composition de flots $(z_1, w_1) \longmapsto \Upsilon_{w_1}(\Gamma_1(z_1))$, ce qui donne :

(7.78)
$$\left\{\begin{aligned} g_{j'}\left(\Upsilon_{w_1}(\Gamma_1(z_1))\right) &\equiv \sum_{\gamma' \in \mathbb{N}^{m'}} \left[f^{\gamma'}\right]\left(\Upsilon_{w_1}(\Gamma_1(z_1))\right) \cdot \overline{\Theta}_{j',\gamma'}\left(\overline{h}\left(\Upsilon_{w_1}(\Gamma_1(z_1))\right)\right), \\ 0 &\equiv \sum_{\gamma' \in \mathbb{N}^{m'}} \left[f^{\gamma'}\right]\left(\Upsilon_{w_1}(\Gamma_1(z_1))\right) \cdot \left[\underline{\mathscr{L}}^\beta \overline{\Theta}'_{j',\gamma'}\left(\overline{h}\right)\right]\left(\Upsilon_{w_1}(\Gamma_1(z_1))\right). \end{aligned}\right.$$

La seconde ligne est valable pour tout $\beta \in \mathbb{N}^m$ satisfaisant $|\beta| \geq 1$. Soit $\delta \in \mathbb{N}^d$. Appliquons la différentiation $\partial^\delta_{w_1}\big|_{w_1=0}$ à ces identités. Grâce à la propriété $\Upsilon_0 = \mathrm{Id}$, grâce aux relations (6.20) et grâce à la formule de Leibniz, nous obtenons :

(7.79)
$$\left\{\begin{aligned} \left[\Upsilon^\delta g_{j'}\right]\left(\Gamma_1(z_1)\right) &\equiv \sum_{\gamma' \in \mathbb{N}^{m'}} \sum_{\delta_1 \leq \delta} \frac{\delta!}{\delta_1!\,(\delta-\delta_1)!} \left[\Upsilon^{\delta-\delta_1} f^{\gamma'}\right]\left(\Gamma_1(z_1)\right) \cdot \\ &\qquad \cdot \left[\Upsilon^{\delta_1} \overline{\Theta}_{j',\gamma'}\left(\overline{h}\right)\right]\left(\Gamma_1(z_1)\right), \\ 0 &\equiv \sum_{\gamma' \in \mathbb{N}^{m'}} \sum_{\delta_1 \leq \delta} \frac{\delta!}{\delta_1!\,(\delta-\delta_1)!} \left[\Upsilon^{\delta-\delta_1} f^{\gamma'}\right]\left(\Gamma_1(z_1)\right) \cdot \\ &\qquad \cdot \left[\Upsilon^{\delta_1} \underline{\mathscr{L}}^\beta \overline{\Theta}_{j',\gamma'}\left(\overline{h}\right)\right]\left(\Gamma_1(z_1)\right). \end{aligned}\right.$$

Dans la deuxième identité, on suppose $|\beta| \geq 1$. Pour développer les termes qui apparaissent à la deuxième et à la quatrième ligne de (7.79), voici une généralisation du Lemme 7.63. Nous formulons aussi quatre autres développements, qui seront utiles par la suite.

Lemme 7.80. Pour tout tout $\delta \in \mathbb{N}^d$, tout $\beta \in \mathbb{N}^m$ et tout $\gamma' \in \mathbb{N}^{m'}$, il existe cinq polynômes scalaires universels $N_{\gamma',\delta}$, $\overline{Q}_{\gamma',\beta,\delta}$, $\overline{P}'_{\beta,\delta}$, M'_δ et $\overline{K}_{\beta,\delta}$ tels

que les quatre identités formelles suivantes sont satisfaites :
(7.81)

$$\left\{\begin{aligned}
\left[\Upsilon^{\delta} f^{\gamma'}\right](t) &\equiv N_{\gamma',\,\delta}\left(\left(\Upsilon^{\delta_1} f_{k'}(t)\right)_{1\leq k'\leq m',\,\delta_1\leq\delta}\right),\\
\left[\Upsilon^{\delta}\,\underline{\mathscr{L}}^{\beta}\overline{f}^{\gamma'}\right](t,\,\tau) &\equiv \overline{Q}_{\gamma',\,\beta,\,\delta}\left(J^{|\beta|+|\delta|}_{\zeta,\,t}\Theta(\zeta,\,t),\ J^{|\beta|+|\delta|}_{\tau}\overline{f}(\tau)\right),\\
\left[\Upsilon^{\delta}\,\underline{\mathscr{L}}^{\beta}\overline{\Theta}'_{j',\,\gamma'}\left(\overline{h}\right)\right](t,\,\tau) &\equiv \overline{P}'_{\beta,\,\delta}\left(J^{|\beta|+|\delta|}_{\zeta,\,t}\Theta(\zeta,\,t),\ J^{|\beta|+|\delta|}_{\tau}\left[\overline{\Theta}'_{j',\,\gamma'}\left(\overline{h}(\tau)\right)\right]\right),\\
\left[\Upsilon^{\delta}\Theta'_{j',\,\gamma'}(h)\right](t) &\equiv M'_{\delta}\left(\left(\Upsilon^{\delta_1} h_{i'_1}(t)\right)_{1\leq i'_1\leq n',\,\delta_1\leq\delta},\ \left[J^{|\delta|}_{t'}\Theta'_{j',\,\gamma'}\right](h(t))\right),\\
\left[\Upsilon^{\delta}\,\underline{\mathscr{L}}^{\beta}\overline{g}_{j'}\right](t,\,\tau) &\equiv \overline{K}_{\beta,\,\delta}\left(J^{|\beta|+|\delta|}_{\zeta,\,t}\Theta(\zeta,\,t),\ J^{|\beta|+|\delta|}_{\tau}\overline{g}_{j'}(\tau)\right),
\end{aligned}\right.$$

dans $\mathbb{C}[\![t,\,\tau]\!]$, pour tout $j'=1,\,\ldots,\,d'$ et tout $\gamma'\in\mathbb{N}^{m'}$.

Les démonstrations, analogues à celle du Lemme 5.4, seront omises. Cependant, formulons quelques commentaires explicatifs. Bien que l'on ait $\Upsilon^{\delta}\phi(t)\equiv\partial^{\delta}_{w}\phi(t)$, pour toute série formelle $\phi(t)$ de la seule variable t (*cf.* (5.17)), nous utiliserons exclusivement la notation Υ^{δ} par souci d'uniformité. Les coefficients des champs de vecteurs Υ_j font intervenir des dérivées partielles des séries définissantes $\Theta_{j_2}(\zeta,\,t)$ par rapport aux variables w_{j_1}. Pour cette raison, nous écrivons dans la deuxième, dans la troisième et dans la cinquième ligne de (7.81) que le premier groupe d'arguments de $\overline{Q}_{\gamma',\beta,\,\delta}$, de $\overline{P}'_{\beta,\,\delta}$ et de $\overline{K}_{\beta,\,\delta}$ fait intervenir le jet d'ordre $|\beta|+|\delta|$ de l'application $\Theta(\zeta,\,t)$ par rapport à toutes les variables $(\zeta,\,t)$. Remarquons que les polynômes $\overline{P}'_{\beta,\,\delta}$ et M'_{δ} sont indépendants de j' et de γ'. Enfin, notons que le deuxième groupe d'arguments de M'_{δ} est le jet d'ordre $|\delta|$ par rapport à t' de l'application convergente $t'\longmapsto\Theta'_{j',\,\gamma'}(t')$, dans lequel on remplace t' par $h(t)$.

Revenons maintenant aux termes de la deuxième et de la quatrième ligne de (7.79). Plus généralement, soit $k\in\mathbb{N}$ et considérons la k-ième chaîne de Segre $\Gamma_k(z_{(k)})$. Grâce au développement donné par la troisième ligne de (7.81) et surtout, grâce aux relations cruciales (7.21), nous obtenons un abaissement d'un cran sur les chaînes de Segre dans le deuxième groupe de variables de $\overline{P}'_{\beta,\,\delta_1}$:
(7.82)

$$\left\{\begin{aligned}
&\text{si } k \text{ est impair}:\quad \left[\Upsilon^{\delta_1}\underline{\mathscr{L}}^{\beta}\overline{\Theta}'_{j',\,\gamma'}\left(\overline{h}\right)\right]\left(\Gamma_k(z_{(k)})\right)\equiv\\
&\qquad\equiv\overline{P}'_{\beta,\,\delta_1}\left(J^{|\beta|+|\delta_1|}_{\zeta,\,t}\Theta\left(\Gamma_k(z_{(k)})\right),\ J^{|\beta|+|\delta_1|}_{\tau}\left[\overline{\Theta}'_{j',\,\gamma'}\left(\overline{h}\right)\right]\left(\Gamma_k(z_{(k)})\right)\right),\\
&\qquad\equiv\overline{P}'_{\beta,\,\delta_1}\left(J^{|\beta|+|\delta_1|}_{\zeta,\,t}\Theta\left(\Gamma_k(z_{(k)})\right),\ J^{|\beta|+|\delta_1|}_{\tau}\left[\overline{\Theta}'_{j',\,\gamma'}\left(\overline{h}\right)\right]\left(\Gamma_{k-1}(z_{(k-1)})\right)\right);\\
&\text{si } k \text{ est pair}:\quad \left[\underline{\Upsilon}^{\delta_1}\mathscr{L}^{\beta}\Theta'_{j',\,\gamma'}(h)\right]\left(\Gamma_k(z_{(k)})\right)\equiv\\
&\qquad\equiv P'_{\beta,\,\delta_1}\left(J^{|\beta|+|\delta_1|}_{z,\,\tau}\overline{\Theta}\left(\Gamma_k(z_{(k)})\right),\ J^{|\beta|+|\delta_1|}_{t}\left[\Theta'_{j',\,\gamma'}(h)\right]\left(\Gamma_k(z_{(k)})\right)\right),\\
&\qquad\equiv P'_{\beta,\,\delta_1}\left(J^{|\beta|+|\delta_1|}_{z,\,\tau}\overline{\Theta}\left(\Gamma_k(z_{(k)})\right),\ J^{|\beta|+|\delta_1|}_{t}\left[\Theta'_{j',\,\gamma'}(h)\right]\left(\Gamma_{k-1}(z_{(k-1)})\right)\right).
\end{aligned}\right.$$

En particulier, pour $k=1$:
(7.83)
$$\begin{cases} \left[\Upsilon^{\delta_1}\underline{\mathscr{L}}^{\beta}\overline{\Theta}'_{j',\gamma'}\left(\overline{h}\right)\right](\Gamma_1(z_1)) \equiv \\ \qquad \equiv \overline{P}'_{\beta,\delta_1}\left(J^{|\beta|+|\delta_1|}_{\zeta,t}\Theta\left(\Gamma_1(z_1)\right),\ J^{|\beta|+|\delta_1|}_{\tau}\left[\overline{\Theta}'_{j',\gamma'}\left(\overline{h}\right)\right](0)\right), \end{cases}$$
et puisque le deuxième groupe d'arguments est *constant*, nous en déduisons que ces termes sont tous des séries *convergentes* par rapport à z_1. Utilisons alors la première ligne de (7.81) et interprétons le résultat ci-après :
(7.84)
$$\begin{cases} \left[\Upsilon^{\delta}g_{j'}\right](\Gamma_1(z_1)) \equiv \displaystyle\sum_{\gamma'\in\mathbb{N}^{m'}}\sum_{\delta_1\leq\delta}\frac{\delta!}{\delta_1!\,(\delta-\delta_1)!}\left[\Upsilon^{\delta_1}\overline{\Theta}'_{j',\gamma'}(\overline{h})\right](\Gamma_1(z_1))\cdot \\ \qquad\qquad \cdot N_{\gamma',\delta-\delta_1}\left(\left(\Upsilon^{\delta_2}f_{k'}(\Gamma_1(z_1))\right)_{1\leq k'\leq m',\,\delta_2\leq\delta-\delta_1}\right), \\ 0 \equiv \displaystyle\sum_{\gamma'\in\mathbb{N}^{m'}}\sum_{\delta_1\leq\delta}\frac{\delta!}{\delta_1!\,(\delta-\delta_1)!}\left[\Upsilon^{\delta_1}\underline{\mathscr{L}}^{\beta}\overline{\Theta}'_{j',\gamma'}(\overline{h})\right](\Gamma_1(z_1))\cdot \\ \qquad\qquad \cdot N_{\gamma',\delta-\delta_1}\left(\left(\Upsilon^{\delta_2}f_{k'}(\Gamma_1(z_1))\right)_{1\leq k'\leq m',\,\delta_2\leq\delta-\delta_1}\right). \end{cases}$$
Nous obtenons des équations analytiques satisfaites par l'application formelle
$$z_1 \longmapsto_{\mathscr{F}} \left(\Upsilon^{\delta_1}\,h_{i'_1}\left(\Gamma_1(z_1)\right)\right)_{1\leq i'_1\leq n',\,\delta_1\leq\delta}. \tag{7.85}$$
Cette application formelle ne s'annule pas forcément en $z_1=0$. Heureusement, puisque $h(0)=0$ et puisque ces équations sont relativement polynomiales par rapport à toutes les variables $\Upsilon^{\delta_1}h_{i'_1}$, telles que $|\delta_1|\geq 1$, nous pouvons appliquer le Théorème d'approximation (2.4) avec l'ordre d'approximation $N=1$ (*cf.* la démonstration du Lemme 7.7). Nous en déduisons qu'il existe une application convergente
(7.86)
$$\begin{cases} z_1 \longmapsto \left(\mathsf{H}_{i'_1,\delta_1}(z_1)\right)_{1\leq i'_1\leq n',\,\delta_1\leq\delta} \\ \qquad =: \left(\left(\mathsf{F}_{k',\delta_1}(z_1)\right)_{1\leq k'\leq m',\,\delta_1\leq\delta},\ \left(\mathsf{G}_{j',\delta_1}(z_1)\right)_{1\leq j'\leq d',\,\delta_1\leq\delta}\right), \end{cases}$$
avec $\mathsf{H}_{i'_1,\delta_1}(0)=\Upsilon^{\delta_1}h_{i'_1}(0)$, qui satisfait les équations analytiques (7.84), c'est-à-dire :
(7.87)
$$\begin{cases} \mathsf{G}_{j',\delta}(z_1) \equiv \displaystyle\sum_{\gamma'\in\mathbb{N}^{m'}}\sum_{\delta_1\leq\delta}\frac{\delta!}{\delta_1!\,(\delta-\delta_1)!}\left[\Upsilon^{\delta_1}\overline{\Theta}'_{j',\gamma'}(\overline{h})\right](\Gamma_1(z_1))\cdot \\ \qquad\qquad \cdot N_{\gamma',\delta-\delta_1}\left(\left(\mathsf{F}_{k',\delta_2}(z_1)\right)_{1\leq k'\leq m',\,\delta_2\leq\delta-\delta_1}\right), \\ 0 \equiv \displaystyle\sum_{\gamma'\in\mathbb{N}^{m'}}\sum_{\delta_1\leq\delta}\frac{\delta!}{\delta_1!\,(\delta-\delta_1)!}\left[\Upsilon^{\delta_1}\underline{\mathscr{L}}^{\beta}\overline{\Theta}'_{j',\gamma'}(\overline{h})\right](\Gamma_1(z_1))\cdot \\ \qquad\qquad \cdot N_{\gamma',\delta-\delta_1}\left(\left(\mathsf{F}_{k',\delta_2}(z_1)\right)_{1\leq k'\leq m',\,\delta_2\leq\delta-\delta_1}\right), \end{cases}$$

pour tout $j' = 1, \ldots, d'$ et tout $\beta \in \mathbb{N}^m$ satisfaisant $|\beta| \geq 1$. Reportons-nous maintenant à la démonstration de la propriété (7.66). Grâce à l'équivalence (7.58), nous avons pu faire basculer les identités (7.68) satisfaites par l'application convergente $\mathsf{H}(z_1)$, dans lesquelles on ne voit pas formellement apparaître les composantes de l'application de réflexion, vers les «meilleures» identités (7.69), dans lesquelles on voit apparaître les modifications convergentes $\Theta'_{j',\gamma'}(\mathsf{H}(z_1))$ des composantes de l'application de réflexion. Nous affirmons qu'il est aussi possible de *transformer les identités* (7.87)*, satisfaites par l'application convergente* (7.86)*, en des identités qui font apparaître les dérivées* $\left[\Upsilon^{\delta_1}\Theta'_{j',\gamma'}\right]\left(\left(\mathsf{H}_{i'_1,\delta_2}(z_1)\right)_{1\leq i'_1,\delta_2\leq\delta_1}\right)$: expliquons soigneusement ce point-clé.

7.88. Comparaison avec la seconde famille d'identités de réflexion. Au lieu de considérer les identités de réflexion écrites à la seconde ligne de (7.62), considérons celles qui sont écrites à la première ligne et remplaçons-y les variables $(t, \tau) \in \mathscr{M}$ par $\Upsilon_{w_1}(\Gamma_1(z_1))$, ce qui donne :
(7.89)

$$\begin{cases} \left[\underline{\mathscr{L}}^{\beta}\overline{g}_{j'}\right](\Upsilon_{w_1}(\Gamma_1(z_1))) \equiv \\ \qquad \equiv \displaystyle\sum_{\gamma'\in\mathbb{N}^{m'}} \left[\underline{\mathscr{L}}^{\beta}\overline{f}^{\gamma'}\right](\Upsilon_{w_1}(\Gamma_1(z_1)))\cdot\Theta'_{j',\gamma'}\left(h\left(\Upsilon_{w_1}(\Gamma_1(z_1))\right)\right). \end{cases}$$

Appliquons l'opérateur $\partial^{\delta}_{w_1}\big|\, w_1 = 0$, en tenant compte de la formule de Leibniz :
(7.90)

$$\begin{cases} \left[\Upsilon^{\delta}\underline{\mathscr{L}}^{\beta}\overline{g}_{j'}\right](\Gamma_1(z_1)) \equiv \displaystyle\sum_{\gamma'\in\mathbb{N}^{m'}}\sum_{\delta_1\leq\delta} \frac{\delta!}{\delta_1!\,(\delta-\delta_1)!}\left[\Upsilon^{\delta-\delta_1}\underline{\mathscr{L}}^{\beta}\overline{f}^{\gamma'}\right](\Gamma_1(z_1))\cdot \\ \qquad\qquad \cdot\left[\Upsilon^{\delta_1}\Theta'_{j',\gamma'}(h)\right](\Gamma_1(z_1)). \end{cases}$$

Grâce aux développements de la deuxième et de la cinquième ligne de (7.81), en utilisant au passage la relation cruciale (6.8), nous voyons que les termes $\left[\Upsilon^{\delta}\underline{\mathscr{L}}^{\beta}\overline{g}_{j'}\right](\Gamma_1(z_1))$ et $\left[\Upsilon^{\delta-\delta_1}\underline{\mathscr{L}}^{\beta}\overline{f}^{\gamma'}\right](\Gamma_1(z_1))$ sont des séries convergentes par rapport à z_1. Enfin, utilisons la quatrième ligne de (7.91), pour développer la deuxième ligne de (7.90), ce qui donne :
(7.91)

$$\begin{cases} \left[\Upsilon^{\delta}\underline{\mathscr{L}}^{\beta}\overline{g}_{j'}\right](\Gamma_1(z_1)) \equiv \displaystyle\sum_{\gamma'\in\mathbb{N}^{m'}}\sum_{\delta_1\leq\delta} \frac{\delta!}{\delta_1!\,(\delta-\delta_1)!}\left[\Upsilon^{\delta-\delta_1}\underline{\mathscr{L}}^{\beta}\overline{f}^{\gamma'}\right](\Gamma_1(z_1))\cdot \\ \qquad \cdot M'_{\delta_1}\left(\left(\Upsilon^{\delta_2}h_{i'_1}(\Gamma_1(z_1))\right)_{1\leq i'_1\leq n',\delta_2\leq\delta_1},\ \left[J^{|\delta_1|}_{t'}\Theta'_{j',\gamma'}\right](h(\Gamma_1(z_1)))\right), \end{cases}$$

pour tout $j' = 1, \ldots, d'$ et tout $\beta \in \mathbb{N}^m$. La même application formelle (7.85) est donc solution des équations analytiques (7.91), qui sont visiblement distinctes des équations (7.84). Or nous avons introduit l'application *convergente* (7.86) qui satisfait les équations (7.87). *Il nous faut maintenant généraliser l'équivalence* (7.58) *pour vérifier que*

cette même application convergente (7.86) *est aussi solution des équations* (7.91), c'est-à-dire qu'il nous faut établir que :

(7.92)
$$\left\{\begin{array}{l} \left[\Upsilon^{\delta}\underline{\mathscr{L}}^{\beta}\overline{g}_{j'}\right](\Gamma_1(z_1)) \equiv \displaystyle\sum_{\gamma'\in\mathbb{N}^{m'}}\sum_{\delta_1\leq\delta}\frac{\delta!}{\delta_1!\,(\delta-\delta_1)!}\,\left[\Upsilon^{\delta-\delta_1}\underline{\mathscr{L}}^{\beta}\overline{f}^{\gamma'}\right](\Gamma_1(z_1))\cdot \\ \qquad\qquad \cdot\, M'_{\delta_1}\left(\left(\mathsf{H}_{i'_1,\,\delta_2}(z_1)\right)_{1\leq i'_1\leq n',\,\delta_2\leq\delta_1},\ \left[J_{t'}^{|\delta|}\Theta'_{j',\gamma'}\right](\mathsf{H}_0(z_1))\right), \end{array}\right.$$

pour tout $j' = 1, \ldots, d'$ et tout $\beta \in \mathbb{N}^m$, où nous avons posé $\mathsf{H}_0 := \left(\mathsf{H}_{i'_1,\,0}\right)_{1\leq i'_1\leq n'}$. Dans le §7.98 ci-dessous, nous établirons en effet le Lemme 7.111, qui implique l'assertion suivante.

Lemme 7.93. Fixons $\ell \in \mathbb{N}$ et supposons qu'une application convergente

$$z_1 \longmapsto \left(\mathsf{H}_{i'_1,\,\delta}(z_1)\right)_{1\leq i'_1\leq n',\,|\delta|\leq\ell} \tag{7.94}$$

telle que $\mathsf{H}_{i'_1,\,\delta}(0) = \Upsilon^{\delta}h_{i'_1}(0)$, $i'_1 = 1, \ldots, n'$, $|\delta| \leq \ell$, satisfait les équations (7.87), pour tout $j' = 1, \ldots, d'$ et tout δ tel que $|\delta| \leq \ell$. Alors elle satisfait les équations (7.92), pour tout $j' = 1, \ldots, d'$ et tout δ tel que $|\delta| \leq \ell$.

Grâce à ce lemme, nous pouvons enfin établir que pour tout $j' = 1, \ldots, d'$, tout $\delta \in \mathbb{N}^d$, et tout $\gamma' \in \mathbb{N}^{m'}$, on a la propriété de convergence :

$$\left[\Upsilon^{\delta}\Theta'_{j',\gamma'}(h)\right]\left(z_1,\,\overline{\Theta}(z_1,\,0)\right) \in \mathbb{C}\{z_1\}, \tag{7.95}$$

qui généralise (7.66).

Proof. Soit $\ell \in \mathbb{N}$ arbitraire. Démontrons que la propriété (7.95) est vraie pour tout δ tel que $|\delta| \leq \ell$. En appliquant le Théorème d'approximation 2.4 aux équations (7.84), écrites pour tout $j' = 1, \ldots, d'$ et tout δ tel que $|\delta| \leq \ell$, et en appliquant le Lemme 7.93, on trouve une application convergente (7.94) qui satisfait les équations (7.92) pout tout $j' = 1, \ldots, d'$ et tout δ tel que $|\delta| \leq \ell$. Nous allons démontrer par récurrence que pour tout δ tel que $|\delta| \leq \ell$, on a :

(7.96)
$$\left\{\begin{array}{l} M'_{\delta}\left(\left(\Upsilon^{\delta_1}h_{i'_1}(\Gamma_1(z_1))\right)_{1\leq i'_1\leq n',\,\delta_1\leq\delta},\ \left[J_{t'}^{|\delta|}\Theta_{j',\gamma'}\right](h(\Gamma_1(z_1)))\right) \equiv \\ \qquad \equiv M'_{\delta}\left(\left(\mathsf{H}_{i'_1,\,\delta_1}(z_1)\right)_{1\leq i'_1\leq n',\,\delta_1\leq\delta},\ \left[J_{t'}^{|\delta|}\Theta_{j',\gamma'}\right](\mathsf{H}_0(z_1))\right), \end{array}\right.$$

pour tout $j' = 1, \ldots, d'$ et tout $\gamma' \in \mathbb{N}^{m'}$, ce qui établira la convergence désirée, puisque l'application (7.94) converge.

Pour $\delta = 0$, les relations (7.96) ont déjà été démontrées en (7.72). Soit $\ell_1 \in \mathbb{N}$ tel que $0 \leq \ell_1 \leq \ell - 1$ et supposons les identités (7.96) vraies pour tout δ tel que $|\delta| \leq \ell_1$, et bien sûr, pour tout $j' = 1, \ldots, d'$ et tout $\gamma' \in \mathbb{N}^{m'}$. Soit $\delta \in \mathbb{N}^d$ un multiindice arbitraire tel que $|\delta| = \ell_1 + 1$. Soustrayons alors les identités (7.92) des identités (7.91), écrites avec ce multiindice δ. Dans la somme $\sum_{\delta_1\leq\delta}$, on a ou bien $\delta_1 = \delta$ ou bien $|\delta_1| \leq \ell_1$. Grâce à

l'hypothèse de récurrence, il ne reste donc que le terme $\delta_1 = \delta$ dans cette somme après soustraction, ce qui donne :

(7.97)
$$\begin{cases} 0 \equiv \displaystyle\sum_{\gamma' \in \mathbb{N}^{m'}} \left[\underline{\mathscr{L}}^{\beta} \overline{f}^{\gamma'}\right](z_1,\, \overline{\Theta}(z_1,\, 0),\, 0,\, 0) \cdot \\ \qquad \cdot \begin{pmatrix} M'_{\delta}\left(\left(\Upsilon^{\delta_1} h_{i'_1}(\Gamma_1(z_1))\right)_{1 \leq i'_1 \leq n',\, \delta_1 \leq \delta_1},\ \left[J_{t'}^{|\delta_1|} \Theta'_{j',\gamma'}\right](h(\Gamma_1(z_1)))\right) - \\ - M'_{\delta}\left(\left(\mathsf{H}_{i'_1,\delta_1}(z_1)\right)_{1 \leq i'_1 \leq n',\, \delta_1 \leq \delta_1},\ \left[J_{t'}^{|\delta|} \Theta'_{j',\gamma'}\right](\mathsf{H}_0(z_1))\right) \end{pmatrix}. \end{cases}$$

Grâce au principe d'unicité (7.37), nous déduisons que les identités (7.96) sont satisfaites pour ce multiindice δ de longueur $\ell_1 + 1$, ce qui achève la démonstration du Lemme 7.93. $\square$

7.98. Transformation des identités de réflexion. Pour formuler la généralisation de l'équivalence (7.58), quittons provisoirement la première chaîne de Segre et travaillons avec des variables $(t,\, \tau) \in \mathscr{M}$ quelconques, ce qui sera utile pour la démonstration finale de la Proposition 7.18 (*voir* le §7.135 ci-dessous). Soit $w_1 \in \mathbb{C}^d$. Puisque le multiflot de Υ stabilise $\mathscr{M}$, on a $\Upsilon_{w_1}(t,\, \tau) \in \mathscr{M}$ et :

$$\begin{cases} 0 = \underline{\mathscr{L}}^{\beta} \overline{r}'_{j'}\left(\overline{h}\left(\Upsilon_{w_1}(t,\, \tau)\right),\, h\left(\Upsilon_{w_1}(t,\, \tau)\right)\right), \\ 0 = \underline{\mathscr{L}}^{\beta} r'_{j'}\left(h\left(\Upsilon_{w_1}(t,\, \tau)\right),\, \overline{h}\left(\Upsilon_{w_1}(t,\, \tau)\right)\right), \end{cases} \tag{7.99}$$

pour tout $j' = 1,\, \ldots,\, d'$ et tout $\beta \in \mathbb{N}^m$. Polarisons ces identités en y remplaçant h par t' et définissons ainsi deux familles infinies de séries comme suit :

(7.100)
$$\begin{cases} \overline{R}'_{j',0}\left(w_1,\, t,\, \tau :\, t'\right) := \overline{r}'_{j'}\left(\overline{h}\left(\Upsilon_{w_1}(t,\, \tau)\right),\, t'\right) \\ \qquad\qquad = w'_{j'} - \displaystyle\sum_{\gamma' \in \mathbb{N}^{m'}} z'^{\gamma'} \cdot \left[\overline{\Theta}'_{j',\gamma'}\left(\overline{h}\right)\right]\left(\Upsilon_{w_1}(t,\, \tau)\right); \\ \overline{R}'_{j',\beta}\left(w_1,\, t,\, \tau :\, t'\right) := \underline{\mathscr{L}}^{\beta} \overline{r}_{j'}\left(\overline{h}\left(\Upsilon_{w_1}(t,\, \tau)\right),\, t'\right) \\ \qquad\qquad = -\displaystyle\sum_{\gamma' \in \mathbb{N}^{m'}} z'^{\gamma'} \cdot \left[\underline{\mathscr{L}}^{\beta} \overline{\Theta}'_{j',\gamma'}\left(\overline{h}\right)\right]\left(\Upsilon_{w_1}(t,\, \tau)\right); \\ S'_{j',\beta}\left(w_1,\, t,\, \tau :\, t'\right) := \underline{\mathscr{L}}^{\beta} r'_{j'}\left(t',\, \overline{h}\left(\Upsilon_{w_1}(t,\, \tau)\right)\right) \\ \qquad\qquad = \left[\underline{\mathscr{L}}^{\beta} \overline{g}_{j'}\right]\left(\Upsilon_{w_1}(t,\, \tau)\right) - \\ \qquad\qquad\qquad - \displaystyle\sum_{\gamma' \in \mathbb{N}^{m'}} \left[\underline{\mathscr{L}}^{\beta} \overline{f}^{\gamma'}\right]\left(\Upsilon_{w_1}(t,\, \tau)\right) \cdot \Theta'_{j',\gamma'}(t'). \end{cases}$$

À la troisième ligne, on suppose $|\beta| \geq 1$. Avec ces notations, les égalités (7.99) s'écrivent maintenant :

$$\begin{cases} 0 = \overline{R}'_{j',\beta}\left(w_1,\, t,\, \tau :\, h\left(\Upsilon_{w_1}(t,\, \tau)\right)\right), \\ 0 = S'_{j',\beta}\left(w_1,\, t,\, \tau :\, h\left(\Upsilon_{w_1}(t,\, \tau)\right)\right), \end{cases} \tag{7.101}$$

toujours avec $(t,\,\tau)\in\mathscr{M}$ et $w_1\in\mathbb{C}^d$. Dans la suite, on remplacera $(t,\,\tau)$ par $\Gamma_k(z_{(k)})$, et alors ces égalités deviendront des identités formelles dans $\mathbb{C}[\![w_1,\,z_{(k)}]\!]$.

Notons que $\overline{R}_{j',0}$ s'identifie avec $\overline{r}'_{j'}\left(\overline{h}\left(\Upsilon_{w_1}(t,\,\tau)\right),\,t'\right)$ et que $S_{j',0}$ s'identifie avec $r_{j'}\left(t',\,\overline{h}\left(\Upsilon_{w_1}(t,\,\tau)\right)\right)$. En posant $\tau'=\overline{h}\left(\Upsilon_{w_1}(t,\,\tau)\right)$ dans la deuxième colonne de (7.44), nous obtenons les identités suivantes :

(7.102)
$$\begin{cases}\overline{R}'_{j',0}\left(w_1,\,t,\,\tau:\,t'\right)\equiv\displaystyle\sum_{j'_1=1}^{d'}A^{j'_1}_{j'}\left(w_1,\,t,\,\tau:\,t'\right)\cdot S'_{j'_1,0}\left(w_1,\,t,\,\tau:\,t'\right),\\[2ex] S'_{j',0}\left(w_1,\,t,\,\tau:\,t'\right)\equiv\displaystyle\sum_{j'_1=1}^{d'}B^{j'_1}_{j'}\left(w_1,\,t,\,\tau:\,t'\right)\cdot\overline{R}'_{j'_1,0}\left(w_1,\,t,\,\tau:\,t'\right),\end{cases}$$

où nous avons posé $A^{j'_1}_{j'}:=a'^{j'_1}_{j'}\left(t',\,h\left(\Upsilon_{w_1}(t,\,\tau)\right)\right)$ et $B^{j'_1}_{j'}:=\overline{a}'^{j'_1}_{j'}\left(h\left(\Upsilon_{w_1}(t,\,\tau)\right),\,t'\right)$. En appliquant les dérivations $\underline{\mathscr{L}}^{\beta}$ à ce couple d'identités, nous obtenons les combinaisons linéaires suivantes, que nous écrivons sans les arguments $(w_1,\,t,\,\tau:\,t')$:

(7.103)
$$\begin{cases}\underline{\mathscr{L}}^{\beta}\overline{R}'_{j',0}\equiv\overline{R}'_{j',\beta}\equiv\displaystyle\sum_{j'_1=1}^{d'}\sum_{\beta_1\leq\beta}A^{j'_1,\beta_1}_{j',\beta}\cdot S'_{j'_1,\beta_1},\\[2ex] \underline{\mathscr{L}}^{\beta}S'_{j',0}\equiv S'_{j',\beta}\equiv\displaystyle\sum_{j'_1=1}^{d'}\sum_{\beta_1\leq\beta}B^{j'_1,\beta_1}_{j',\beta}\cdot\overline{R}'_{j'_1,\beta_1},\end{cases}$$

où nous avons posé :

(7.104)
$$\begin{cases}A^{j'_1,\beta_1}_{j',\beta}:=\dfrac{\beta!}{\beta_1!\,(\beta-\beta_1)!}\,\underline{\mathscr{L}}^{\beta-\beta_1}\left(A^{j'_1}_{j'}\right),\\[2ex] B^{j'_1,\beta_1}_{j',\beta}:=\dfrac{\beta!}{\beta_1!\,(\beta-\beta_1)!}\,\underline{\mathscr{L}}^{\beta-\beta_1}\left(B^{j'_1}_{j'}\right).\end{cases}$$

Rappelons que les identités (7.103) nous ont servi pour établir l'équivalence (7.58). Pour généraliser cette équivalence (et obtenir la preuve du Lemme 7.93), nous allons les différentier par rapport à w_1.

Pour cela, écrivons $w_1=(w_{1;1},\,\ldots,\,w_{1;d})\in\mathbb{C}^d$, choisissons un entier j compris entre 1 et d, et appliquons la dérivation $\frac{\partial}{\partial w_{1;j}}$ aux identités (7.101), sans écrire les arguments, ce qui nous donne :

(7.105)
$$\begin{cases}0=\dfrac{\partial\overline{R}'_{j',\beta}}{\partial w_{1;j}}+\displaystyle\sum_{i'_1=1}^{n'}\dfrac{\partial\overline{R}'_{j',\beta}}{\partial t'_{i'_1}}\cdot\left[\Upsilon_j h_{i'_1}\right],\\[2ex] 0=\dfrac{\partial S'_{j',\beta}}{\partial w_{1;j}}+\displaystyle\sum_{i'_1=1}^{n'}\dfrac{\partial S'_{j',\beta}}{\partial t'_{i'_1}}\cdot\left[\Upsilon_j h_{i'_1}\right].\end{cases}$$

Introduisons de nouvelles variables indépendantes $T'_{i'_1,\,j}$, qui correspondent aux dérivées $\left[\Upsilon_j h_{i'_1}\right]$ apparaissant dans (7.105), et définissons :
(7.106)
$$\begin{cases} \overline{R}'_{j',\beta,j}\left(w_1,\,t,\,\tau:t',\left(T'_{i'_1,j}\right)_{1\leq i'_1\leq n'}\right) := \dfrac{\partial \overline{R}'_{j',\beta}}{\partial w_{1;j}} + \displaystyle\sum_{i'_1=1}^{n'} \dfrac{\partial \overline{R}'_{j',\beta}}{\partial t'_{i'_1}} \cdot T'_{i'_1,j}, \\ S'_{j',\beta,j}\left(w_1,\,t,\,\tau:t',\left(T'_{i'_1,j}\right)_{1\leq i'_1\leq n'}\right) := \dfrac{\partial S'_{j',\beta}}{\partial w_{1;j}} + \displaystyle\sum_{i'_1=1}^{n'} \dfrac{\partial S'_{j',\beta}}{\partial t'_{i'_1}} \cdot T'_{i'_1,j}. \end{cases}$$

Plus généralement, soit $\delta \in \mathbb{N}^d$ un multiindice arbitraire. En appliquant l'opérateur ∂_w^δ aux identités (7.101), nous obtenons des égalités qui impliquent deux familles infinies de séries $\overline{R}'_{j',\beta,\delta}$ et $S'_{j',\beta,\delta}$, qui sont polynomiales par rapport aux variables différentiées strictement $\left[\Upsilon^{\delta_1} h_{i'_1}\right]$, où $1 \leq i'_1 \leq n'$ et $0 \neq \delta_1 \leq \delta$, que nous écrirons :

$$\text{(7.107)} \quad \begin{cases} 0 = \overline{R}'_{j',\beta,\delta}\left(w_1,\,t,\,\tau:\left(\left[\Upsilon^{\delta_1} h_{i'_1}\right](\Upsilon_{w_1}(t,\,\tau))\right)_{1\leq i'_1\leq n',\,\delta_1\leq\delta}\right), \\ 0 = S'_{j',\beta,\delta}\left(w_1,\,t,\,\tau:\left(\left[\Upsilon^{\delta_1} h_{i'_1}\right](\Upsilon_{w_1}(t,\,\tau))\right)_{1\leq i'_1\leq n',\,\delta_1\leq\delta}\right). \end{cases}$$

Introduisons des variables indépendantes $\left(T'_{i'_1,\,\delta_1}\right)_{1\leq i'_1\leq n',\,\delta_1\leq\delta}$ correspondant à ces dérivées $\Upsilon^{\delta_1} h_{i'_1}$, en convenant que $T'_{i'_1,\,0}$ s'identifie à $t'_{i'_1}$, et définissons les nouvelles séries :

$$\text{(7.108)} \quad \begin{cases} \overline{R}'_{j',\beta,\delta}\left(w_1,\,t,\,\tau:\left(T'_{i'_1,\,\delta_1}\right)_{1\leq i'_1\leq n',\,\delta_1\leq\delta}\right), \\ S'_{j',\beta,\delta}\left(w_1,\,t,\,\tau:\left(T'_{i'_1,\,\delta_1}\right)_{1\leq i'_1\leq n',\,\delta_1\leq\delta}\right). \end{cases}$$

Alors les identités (7.79) et (7.90) (où $\delta \in \mathbb{N}^d$ est fixé et où $j' = 1,\,\ldots,\,d'$ et $\beta \in \mathbb{N}^m$ varient) coïncident avec les deux familles d'identités :

$$\text{(7.109)} \quad \begin{cases} 0 \equiv \overline{R}'_{j',\beta,\delta}\left(0,\,\Gamma_1(z_1):\left(\Upsilon^{\delta_1} h_{i'_1}(\Gamma_1(z_1))\right)_{1\leq i'_1\leq n',\,\delta_1\leq\delta}\right), \\ 0 \equiv S'_{j',\beta,\delta}\left(0,\,\Gamma_1(z_1):\left(\Upsilon^{\delta_1} h_{i'_1}(\Gamma_1(z_1))\right)_{1\leq i'_1\leq n',\,\delta_1\leq\delta}\right). \end{cases}$$

Après ces préliminaires, nous pouvons enfin énoncer la généralisation attendue du Lemme 7.57. Rappelons que nous avons posé $w_1 = 0$ dans (7.79) et dans (7.90) ; c'est pourquoi nous poserons aussi $w_1 = 0$ dans le lemme suivant.

Lemme 7.110. Soit $\nu \in \mathbb{N}$, soit $\mathsf{x} \in \mathbb{C}^\nu$, soit $\mathsf{Q}(\mathsf{x}) \in \mathbb{C}[\![\mathsf{x}]\!]^{2n}$ avec $\mathsf{Q}(0) = 0$, soit $\delta \in \mathbb{N}^d$, et soit $\mathsf{x} \longmapsto_{\mathscr{F}} \left(\mathsf{T}'_{i'_1,\,\delta_1}(\mathsf{x})\right)_{1\leq i'_1\leq n',\,\delta_1\leq\delta}$ une application

formelle telle que $\mathsf{T}'_{i'_1,\,\delta_1}(0) = \left[\Upsilon^{\delta_1} h_{i'_1}\right](0)$. L'équivalence suivante est satisfaite :

(7.111)
$$\left\{\begin{array}{c}\left(\begin{array}{l}\forall\, j' = 1,\,\ldots,\,d',\ \forall\,\beta\in\mathbb{N}^m,\ \forall\,\delta_1\leq\delta,\ \text{on a dans } \mathbb{C}[\![\mathsf{x}]\!]\ :\\ \overline{R}'_{j',\,\beta,\,\delta_1}\left(0,\,t,\,\tau:\ \left(\mathsf{T}'_{i'_1,\,\delta_2}(\mathsf{x})\right)_{1\leq i'_1\leq n',\,\delta_2\leq\delta_1}\right)\Big|_{(t,\,\tau)=\mathsf{Q}(\mathsf{x})}\equiv 0\end{array}\right)\\ \Updownarrow\\ \left(\begin{array}{l}\forall\, j' = 1,\,\ldots,\,d',\ \forall\,\beta\in\mathbb{N}^m,\ \forall\,\delta_1\leq\delta,\ \text{on a dans } \mathbb{C}[\![\mathsf{x}]\!]\ :\\ S'_{j',\,\beta,\,\delta_1}\left(0,\,t,\,\tau:\ \left(\mathsf{T}'_{i'_1,\,\delta_2}(\mathsf{x})\right)_{1\leq i'_1\leq n',\,\delta_2\leq\delta_1}\right)\Big|_{(t,\,\tau)=\mathsf{Q}(\mathsf{x})}\equiv 0\end{array}\right)\end{array}\right..$$

Grâce à l'équivalence (7.111) ci-dessus, le Lemme 7.93 est démontré : il suffit de poser $\mathsf{x} = z_1$, $\mathsf{Q}(\mathsf{x}) := \Gamma_1(z_1)$ et $\mathsf{T}_{i'_1,\,\delta_1}(\mathsf{x}) := \mathsf{H}_{i'_1,\,\delta_1}(\mathsf{x})$.

Proof. Nous affirmons que les séries (7.108) peuvent être définies par récurrence de la manière suivante. En effet, si l'on note $\mathbf{1}^d_j$ le multiindice $(0,\,\ldots,\,0,\,1,\,0,\,\ldots,\,0)\in\mathbb{N}^d$, avec 1 à la j-ième place et 0 aux autres places, on a les relations :

(7.112)
$$\left\{\begin{array}{l}\overline{R}'_{j',\,\beta,\,\delta+\mathbf{1}^d_j} := \dfrac{\partial\overline{R}'_{j',\,\beta,\,\delta}}{\partial w_{1;j}} + \displaystyle\sum_{i'_1=1}^{n'}\sum_{\delta_1\leq\delta}\dfrac{\partial\overline{R}'_{j',\,\beta,\,\delta}}{\partial T'_{i'_1,\,\delta_1}}\cdot T'_{i'_1,\,\delta+\mathbf{1}^d_j},\\[2ex] S'_{j',\,\beta,\,\delta+\mathbf{1}^d_j} := \dfrac{\partial S'_{j',\,\beta,\,\delta}}{\partial w_{1;j}} + \displaystyle\sum_{i'_1=1}^{n'}\sum_{\delta_1\leq\delta}\dfrac{\partial S'_{j',\,\beta,\,\delta}}{\partial T'_{i'_1,\,\delta_1}}\cdot T'_{i'_1,\,\delta+\mathbf{1}^d_j},\end{array}\right.$$

de telle sorte que

(7.113)
$$\left\{\begin{array}{l}\partial^\delta_{w_1}\left[\overline{R}'_{j',\,\beta}\left(w_1,\,t,\,\tau:\ h\left(\Upsilon_{w_1}(t,\,\tau)\right)\right)\right]\equiv\\ \qquad\equiv\overline{R}'_{j',\,\beta,\,\delta}\left(w_1,\,t,\,\tau:\ \left(\Upsilon^{\delta_1}h_{i'_1}\left(\Upsilon_{w_1}(t,\,\tau)\right)\right)_{1\leq i'_1\leq n',\,\delta_1\leq\delta}\right),\\ \partial^\delta_{w_1}\left[S'_{j',\,\beta}\left(w_1,\,t,\,\tau:\ h\left(\Upsilon_{w_1}(t,\,\tau)\right)\right)\right]\equiv\\ \qquad\equiv S'_{j',\,\beta,\,\delta}\left(w_1,\,t,\,\tau:\ \left(\Upsilon^{\delta_1}h_{i'_1}\left(\Upsilon_{w_1}(t,\,\tau)\right)\right)_{1\leq i'_1\leq n',\,\delta_1\leq\delta}\right).\end{array}\right.$$

Nous affirmons que pour tout $\delta\in\mathbb{N}^d$, il existe deux collections de séries formelles :

(7.114)
$$\left\{\begin{array}{l}A^{j'_1,\,\beta_1,\,\delta_1}_{j',\,\beta,\,\delta}\left(w_1,\,t,\,\tau:\ \left(T'_{i'_1,\,\delta_2}\right)_{1\leq i'_1\leq n',\,\delta_2\leq\delta-\delta_1}\right),\\ B^{j'_1,\,\beta_1,\,\delta_1}_{j',\,\beta,\,\delta}\left(w_1,\,t,\,\tau:\ \left(T'_{i'_1,\,\delta_2}\right)_{1\leq i'_1\leq n',\,\delta_2\leq\delta-\delta_1}\right),\end{array}\right.$$

telles que les identités formelles suivantes, que nous écrivons d'abord sans les arguments, sont satisfaites :

$$
(7.115)\qquad \begin{cases} \overline{R}'_{j',\beta,\delta} \equiv \displaystyle\sum_{j'_1=1}^{d'} \sum_{\beta_1\leq\beta} \sum_{\delta_1\leq\delta} A^{j'_1,\beta_1,\delta_1}_{j',\beta,\delta} \cdot S'_{j'_1,\beta_1,\delta_1}, \\ S'_{j',\beta,\delta} \equiv \displaystyle\sum_{j'_1=1}^{d'} \sum_{\beta_1\leq\beta} \sum_{\delta_1\leq\delta} B^{j'_1,\beta_1,\delta_1}_{j',\beta,\delta} \cdot \overline{R}'_{j'_1,\beta_1,\delta_1}; \end{cases}
$$

par souci de complétude, écrivons-les ensuite avec leurs arguments :
(7.116)

$$
\begin{cases} \overline{R}'_{j',\beta,\delta}\Big(w_1,\, t,\, \tau :\, \big(T'_{i'_1,\delta_1}\big)_{1\leq i'_1\leq n',\,\delta_1\leq\delta}\Big) \equiv \displaystyle\sum_{j'_1=1}^{d'} \sum_{\beta_1\leq\beta} \sum_{\delta_1\leq\delta} \\ \qquad A^{j'_1,\beta_1,\delta_1}_{j',\beta,\delta}\Big(w_1,\, t,\, \tau :\, \big(T'_{i'_1,\delta_2}\big)_{1\leq i'_1\leq n',\,\delta_2\leq\delta-\delta_1}\Big) \cdot \\ \qquad\qquad \cdot\, S'_{j'_1,\beta_1,\delta_1}\Big(w_1,\, t,\, \tau :\, \big(T'_{i'_1,\delta_2}\big)_{1\leq i'_1\leq n',\,\delta_2\leq\delta_1}\Big), \\ S'_{j',\beta,\delta}\Big(w_1,\, t,\, \tau :\, \big(T'_{i'_1,\delta_1}\big)_{1\leq i'_1\leq n',\,\delta_1\leq\delta}\Big) \equiv \displaystyle\sum_{j'_1=1}^{d'} \sum_{\beta_1\leq\beta} \sum_{\delta_1\leq\delta} \\ \qquad B^{j'_1,\beta_1,\delta_1}_{j',\beta,\delta}\Big(w_1,\, t,\, \tau :\, \big(T'_{i'_1,\delta_2}\big)_{1\leq i'_1\leq n',\,\delta_2\leq\delta-\delta_1}\Big) \cdot \\ \qquad\qquad \cdot\, \overline{R}'_{j'_1,\beta_1,\delta_1}\Big(w_1,\, t,\, \tau :\, \big(T'_{i'_1,\delta_2}\big)_{1\leq i'_1\leq n',\,\delta_2\leq\delta_1}\Big). \end{cases}
$$

Avant d'établir cette affirmation, notons que les identités (7.116) impliquent immédiatement l'équivalence désirée (7.111) : il suffit de poser $w_1 = 0$, de remplacer $(t,\, \tau)$ par $\mathsf{Q}(\mathsf{x})$ et de remplacer $T'_{i'_1,\delta_1}$ par $\mathsf{T}'_{i'_1,\delta_1}(\mathsf{x})$ dans (7.116).

Pour $\delta = 0$, les identités (7.115) ont déjà été vues dans (7.103). Établissons les identités (7.115) pour $\delta = \mathbf{1}^d_j$. Pour cela, partons de (7.103), que nous réécrivons :

$$
(7.117)\qquad \begin{cases} \overline{R}'_{j',\beta} \equiv \displaystyle\sum_{j'_1=1}^{d'} \sum_{\beta_1\leq\beta} A^{j'_1,\beta_1}_{j',\beta} \cdot S'_{j'_1,\beta_1}, \\ S'_{j',\beta} \equiv \displaystyle\sum_{j'_1=1}^{d'} \sum_{\beta_1\leq\beta} B^{j'_1,\beta_1}_{j',\beta} \cdot \overline{R}'_{j'_1,\beta_1}. \end{cases}
$$

Appliquons tout d'abord l'opérateur $\partial_{w_{1;j}}$ de part et d'autre de (7.117), ce qui donne :

$$
(7.118)\quad \begin{cases} \dfrac{\partial \overline{R}'_{j',\beta}}{\partial w_{1;j}} \equiv \displaystyle\sum_{j'_1=1}^{d'} \sum_{\beta_1 \leq \beta} \left(\dfrac{\partial A^{j'_1,\beta_1}_{j',\beta}}{\partial w_{1;j}} \cdot S'_{j'_1,\beta_1} + A^{j'_1,\beta_1}_{j',\beta} \cdot \dfrac{\partial S'_{j'_1,\beta_1}}{\partial w_{1;j}} \right), \\ \dfrac{\partial S'_{j',\beta}}{\partial w_{1;j}} \equiv \displaystyle\sum_{j'_1=1}^{d'} \sum_{\beta_1 \leq \beta} \left(\dfrac{\partial B^{j'_1,\beta_1}_{j',\beta}}{\partial w_{1;j}} \cdot \overline{R}'_{j'_1,\beta_1} + B^{j'_1,\beta_1}_{j',\beta} \cdot \dfrac{\partial \overline{R}'_{j'_1,\beta_1}}{\partial w_{1;j}} \right). \end{cases}
$$

Ensuite, appliquons l'opérateur $\sum_{i'_1=1}^{n'} \partial_{t'_{i'_1}}(\cdot)\, T'_{i'_1,j}$ de part et d'autre de (7.117), ce qui donne :

(7.119)

$$
\begin{cases} \displaystyle\sum_{i'_1=1}^{n'} \dfrac{\partial \overline{R}'_{j',\beta}}{\partial t'_{i'_1}} \cdot T'_{i'_1,j} \equiv \sum_{i'_1=1}^{n'} \sum_{j'_1=1}^{d'} \sum_{\beta_1 \leq \beta} \left(\dfrac{\partial A^{j'_1,\beta_1}_{j',\beta}}{\partial t'_{i'_1}} \cdot T'_{i'_1,j} \cdot S'_{j'_1,\beta_1} + \right. \\ \qquad\qquad \left. + A^{j'_1,\beta_1}_{j',\beta} \cdot \dfrac{\partial S'_{j'_1,\beta_1}}{\partial t'_{i'_1}} \cdot T'_{i'_1,j} \right) \\ \displaystyle\sum_{i'_1=1}^{n'} \dfrac{\partial S'_{j',\beta}}{\partial t'_{i'_1}} \cdot T'_{i'_1,j} \equiv \sum_{i'_1=1}^{n'} \sum_{j'_1=1}^{d'} \sum_{\beta_1 \leq \beta} \left(\dfrac{\partial B^{j'_1,\beta_1}_{j',\beta}}{\partial t'_{i'_1}} \cdot T'_{i'_1,j} \cdot \overline{R}'_{j'_1,\beta_1} + \right. \\ \qquad\qquad \left. + B^{j'_1,\beta_1}_{j',\beta} \cdot \dfrac{\partial \overline{R}'_{j'_1,\beta_1}}{\partial t'_{i'_1}} \cdot T'_{i'_1,j} \right). \end{cases}
$$

Additionnons maintenant (7.118) avec (7.119) ; en tenant compte de la définition (7.106), nous obtenons l'expression désirée (7.115), pour $\delta = \mathbf{1}^d_j$:

(7.120)

$$
\begin{cases} \overline{R}'_{j',\beta,\mathbf{1}^d_j} \equiv \displaystyle\sum_{j'_1=1}^{d'} \sum_{\beta_1 \leq \beta} \left(A^{j'_1,\beta_1,\mathbf{1}^d_j}_{j',\beta,\mathbf{1}^d_j} \cdot S'_{j'_1,\beta_1,\mathbf{1}^d_j} + A^{j'_1,\beta_1,0}_{j',\beta,\mathbf{1}^d_j} \cdot S'_{j'_1,\beta_1,0} \right), \\ S'_{j',\beta,\mathbf{1}^d_j} \equiv \displaystyle\sum_{j'_1=1}^{d'} \sum_{\beta_1 \leq \beta} \left(B^{j'_1,\beta_1}_{j',\beta} \cdot \overline{R}'_{j'_1,\beta_1,\mathbf{1}^d_j} + B^{j'_1,\beta_1,0}_{j',\beta,\mathbf{1}^d_j} \cdot \overline{R}'_{j'_1,\beta_1,0} \right), \end{cases}
$$

où nous avons posé :

$$
(7.121)\qquad \begin{cases}
A^{j'_1,\,\beta_1,\,\mathbf{1}^d_j}_{j',\,\beta,\,\mathbf{1}^d_j} := A^{j'_1,\,\beta_1}_{j',\,\beta}\,, \\[2mm]
A^{j'_1,\,\beta_1,\,0}_{j',\,\beta,\,\mathbf{1}^d_j} := \dfrac{\partial A^{j'_1,\,\beta_1}_{j',\,\beta}}{\partial w_{1;j}} + \displaystyle\sum_{i'_1=1}^{n'} \dfrac{\partial A^{j_1,\,\beta_1}_{j',\,\beta}}{\partial t'_{i'_1}} \cdot T'_{i'_1,\,j}, \\[2mm]
B^{j'_1,\,\beta_1,\,\mathbf{1}^d_j}_{j',\,\beta,\,\mathbf{1}^d_j} := B^{j'_1,\,\beta_1}_{j',\,\beta}\,, \\[2mm]
B^{j'_1,\,\beta_1,\,0}_{j',\,\beta,\,\mathbf{1}^d_j} := \dfrac{\partial B^{j'_1,\,\beta_1}_{j',\,\beta}}{\partial w_{1;j}} + \displaystyle\sum_{i'_1=1}^{n'} \dfrac{\partial B^{j_1,\,\beta_1}_{j',\,\beta}}{\partial t'_{i'_1}} \cdot T'_{i'_1,\,j}.
\end{cases}
$$

En appliquant des dérivations d'ordre arbitraire par rapport à w_1, en utilisant les formules (7.112) et en raisonnant par récurrence, on établit les identités (7.115). Puisque nous avons expliqué le principe de la démonstration pour $\delta = \mathbf{1}^d_j$, nous ne croyons pas utile de développer ces calculs formels supplémentaires.

Le Lemme 7.110 est démontré. □

7.122. Convergence des composantes de l'application de réflexion conjuguée sur la deuxième chaîne de Segre. Nous savons maintenant que pour tout $\ell \in \mathbb{N}$, les propriétés de convergence :

$$
(7.123)\qquad \left[J^\ell_t \Theta'_{j',\,\gamma'}(h)\right](\Gamma_1(z_1)) \in \mathbb{C}\{z_1\}^{N_{d',\,n,\,\ell}},
$$

sont satisfaites, pour tout $j' = 1, \ldots, d'$ et tout $\gamma' \in \mathbb{N}^{m'}$. Grâce à cette propriété, nous pouvons établir le Lemme 7.18 pour $k = 2$ et $\ell = 0$, c'est-à-dire :

$$
(7.124)\qquad \left[\overline{\Theta}'_{j',\,\gamma'}(\overline{h})\right]\big(\Gamma_2(z_{(2)})\big) \in \mathbb{C}\{z_{(2)}\}^{d'},
$$

pour tout $j' = 1, \ldots, d'$ et tout $\gamma' \in \mathbb{N}^{m'}$.

Proof. Posons $(t, \tau) = \Gamma_2(z_{(2)})$ dans la quatrième famille d'identités de réflexion (7.62) :

(7.125)

$$
\begin{cases}
\overline{g}_{j'}\big(\Gamma_2(z_{(2)})\big) \equiv \displaystyle\sum_{\gamma' \in \mathbb{N}^{m'}} \left[\overline{f}^{\gamma'}\right]\big(\Gamma_2(z_{(2)})\big) \cdot \left[\Theta'_{j',\,\gamma'}(h)\right]\big(\Gamma_2(z_{(2)})\big)\,, \\[2mm]
0 \equiv \displaystyle\sum_{\gamma' \in \mathbb{N}^{m'}} \left[\overline{f}^{\gamma'}\right]\big(\Gamma_2(z_{(2)})\big) \cdot \left[\mathscr{L}^\beta \Theta'_{j',\,\gamma'}(h)\right]\big(\Gamma_2(z_{(2)})\big)\,.
\end{cases}
$$

Dans la deuxième ligne, on suppose $|\beta| \geq 1$. D'après l'identité conjuguée de la troisième ligne de (7.81), écrite pour $\delta = 0$ et $\beta \in \mathbb{N}^m$ arbitraire, nous

voyons que tous les termes
(7.126)
$$\begin{cases} \left[\mathscr{L}^{\beta}\Theta'_{j',\gamma'}(h)\right]\left(\Gamma_2(z_{(2)})\right) \equiv P'_{\beta,0}\left(J^{|\beta|}_{z,\tau}\overline{\Theta}\left(\Gamma_2(z_{(2)})\right),\ \left[J^{|\beta|}_{t}\Theta'_{j',\gamma'}(h)\right]\left(\Gamma_2(z_{(2)})\right)\right) \\ \qquad\qquad\qquad\qquad \equiv P'_{\beta,0}\left(J^{|\beta|}_{z,\tau}\overline{\Theta}\left(\Gamma_2(z_{(2)})\right),\ \left[J^{|\beta|}_{t}\Theta'_{j',\gamma'}(h)\right](\Gamma_1(z_1))\right). \end{cases}$$

sont convergents par rapport à $(z_1,\, z_2) \in \mathbb{C}^{2m}$, grâce à (7.21) et grâce ce que nous venons d'établir en (7.123). Par conséquent, les équations (7.125) sont analytiques par rapport à $(z_{(2)},\, \tau')$, et l'application formelle $z_{(2)} \longmapsto_{\mathscr{F}} \overline{h}\left(\Gamma_2(z_{(2)})\right)$ les satisfait formellement. Appliquons le Théorème d'approximation (2.4) avec l'ordre d'approximation $N = 1$. Nous en déduisons l'existence d'une application convergente $z_{(2)} \longmapsto \overline{\mathsf{H}}(z_{(2)}) = \left(\overline{\mathsf{F}}(z_{(2)}),\, \overline{\mathsf{G}}(z_{(2)})\right) \in \mathbb{C}\{z_{(2)}\}^{m'} \times \mathbb{C}\{z_{(2)}\}^{d'}$ telle que

$$(7.127)\qquad \begin{cases} \overline{\mathsf{G}}_{j'}(z_{(2)}) \equiv \displaystyle\sum_{\gamma'\in\mathbb{N}^{m'}} \left[\overline{\mathsf{F}}^{\gamma'}\right](z_{(2)}) \cdot \Theta'_{j',\gamma'}(h(\Gamma_1(z_1)), \\ \qquad 0 \equiv \displaystyle\sum_{\gamma'\in\mathbb{N}^{m'}} \left[\overline{\mathsf{F}}^{\gamma'}\right](z_{(2)}) \cdot \left[\mathscr{L}^{\beta}\Theta'_{j',\gamma'}(h)\right]\left(\Gamma_2(z_{(2)})\right). \end{cases}$$

Les équations (7.127) coïncident avec $\mathscr{L}^{\beta} r'_{j'}\left(h\left(\Gamma_2(z_{(2)})\right),\, \overline{\mathsf{H}}(z_{(2)})\right) \equiv 0$, pour tout $j' = 1, \ldots, d'$ et tout $\beta \in \mathbb{N}^m$. En appliquant la conjugaison de l'équivalence (7.58), nous pouvons faire basculer ces identités vers $\mathscr{L}^{\beta}\overline{r}'_{j'}\left(\overline{\mathsf{H}}(z_{(2)}),\, h\left(\Gamma_2(z_{(2)})\right)\right) \equiv 0$, pour tout $j' = 1, \ldots, d'$ et tout $\beta \in \mathbb{N}^m$, ou, de manière développée :
(7.128)
$$\left[\mathscr{L}^{\beta} g_{j'}\right]\left(\Gamma_2(z_{(2)})\right) \equiv \sum_{\gamma'\in\mathbb{N}^{m'}} \left[\mathscr{L}^{\beta} f^{\gamma'}\right]\left(\Gamma_2(z_{(2)})\right) \cdot \overline{\Theta}'_{j',\gamma'}\left(\overline{\mathsf{H}}(z_{(2)})\right),$$

pour tout $j' = 1, \ldots, d'$ et tout $\beta \in \mathbb{N}^m$. Soustrayons ces identités des identités de réflexion écrites à la troisième ligne de (7.62) avec $(t,\, \tau) = \Gamma_2(z_{(2)})$; nous obtenons :
(7.129)
$$0 \equiv \sum_{\gamma'\in\mathbb{N}^{m'}} \left[\mathscr{L}^{\beta} f^{\gamma'}\right]\left(\Gamma_2(z_{(2)})\right) \cdot \left(\overline{\Theta}'_{j',\gamma'}\left(\overline{h}\left(\Gamma_2(z_{(2)})\right)\right) - \overline{\Theta}'_{j',\gamma'}\left(\overline{\mathsf{H}}(z_{(2)})\right)\right).$$

Généralisons maintenant le principe d'unicité (7.37). Soit $k \in \mathbb{N}$. Pour tout $\gamma' \in \mathbb{N}^{m'}$, supposons donnée une série formelle vectorielle $\overline{F}_{\gamma'}(z_{(k)}) \in \mathbb{C}[\![z_{(k)}]\!]^{d'}$ et supposons que l'application formelle h est CR-transversale, ce qui se traduit par l'implication (7.27).

Lemme 7.130. Supposons que pour tout $\beta \in \mathbb{N}^m$, l'identité formelle suivante est satisfaite :

(7.131)
$$\begin{cases} 0 \equiv \displaystyle\sum_{\gamma' \in \mathbb{N}^{m'}} \left[\underline{\mathscr{L}}^\beta \overline{f}^{\gamma'}\right] \big(\Gamma_k(z_{(k)})\big) \cdot \overline{F}_{\gamma'}(z_{(k)}) & \text{si } k \text{ est impair}, \\ 0 \equiv \displaystyle\sum_{\gamma' \in \mathbb{N}^{m'}} \left[\mathscr{L}^\beta f^{\gamma'}\right] \big(\Gamma_k(z_{(k)})\big) \cdot \overline{F}_{\gamma'}(z_{(k)}) & \text{si } k \text{ est pair}, \end{cases}$$

dans $\mathbb{C}[\![z_{(k)}]\!]$. Alors :

$$\overline{F}_{\gamma'}(z_{(k)}) \equiv 0, \qquad \forall\, \gamma' \in \mathbb{N}^{m'}. \tag{7.132}$$

Proof. Traitons seulement le cas où k est pair. Puisque $\left[\mathscr{L}^\beta f^{\gamma'}\right](0) = f_{\gamma',\beta}$ d'après (7.29), et puisque $\Gamma_k(0) = 0$, il existe des coefficients $f_{\gamma',\beta,\gamma_k} \in \mathbb{C}$ tels que l'on peut écrire :

$$\left[\mathscr{L}^\beta f^{\gamma'}\right] \big(\Gamma_k(z_{(k)})\big) \equiv f_{\gamma',\beta} + \sum_{\gamma_k \in \mathbb{N}^{km},\, |\gamma_k| \geq 1} f_{\gamma',\beta,\gamma_k} \cdot z_{(k)}^{\gamma_k}. \tag{7.133}$$

Développons aussi $\overline{F}_{\gamma'}(z_{(k)}) = \sum_{\gamma_k \in \mathbb{N}^{km}} \overline{F}_{\gamma',\gamma_k} \cdot z_{(k)}^{\gamma_k}$. En raisonnant exactement comme dans la démonstration du Lemme 7.36, on obtient l'annulation de tous les coefficients $\overline{F}_{\gamma',\gamma_k}$, ce qui achève la preuve. □

Une application directe de ce lemme aux identités (7.129) fournit les identités

$$\overline{\Theta}'_{j',\gamma'} \big(\overline{h}\left(\Gamma_2(z_{(2)})\right)\big) \equiv \overline{\Theta}'_{j',\gamma'} \big(\overline{\mathsf{H}}(z_{(2)})\big)\,, \tag{7.134}$$

pour tout $j' = 1, \ldots, d'$ et tout $\gamma' \in \mathbb{N}^{m'}$, où le membre de droite est convergent, ce qui achève la démonstration de (7.124). □

7.135. Démonstration finale. Grâce à tous ces préparatifs, nous pouvons enfin présenter la démonstration de la Proposition 7.18, en raisonnant par récurrence sur la longueur k des chaînes de Segre. Nous traiterons seulement le cas où k est impair – le cas où k est pair étant similaire.

Ainsi, nous supposons que pout tout $\ell \in \mathbb{N}$, les propriétés de convergence :

$$\left[J_t^\ell \Theta'_{\gamma'}(h)\right] \big(\Gamma_k(z_{(k)})\big) \in \mathbb{C}\{z_{(k)}\}^{N_{d',n,\ell}}, \tag{7.136}$$

sont satisfaites, pour tout $\gamma' \in \mathbb{N}^{m'}$. L'objectif est de démontrer que pour tout $\ell \in \mathbb{N}$, les propriétés de convergence au rang $k+1$:

$$\left[J_\tau^\ell \overline{\Theta}_{\gamma'} \big(\overline{h}\big)\right] \big(\Gamma_{k+1}(z_{(k+1)})\big) \in \mathbb{C}\{z_{(k+1)}\}^{N_{d',n,\ell}}, \tag{7.137}$$

sont satisfaites, pour tout $\gamma' \in \mathbb{N}^{m'}$.

Pour cela, commençons par poser $(t, \tau) = \underline{\Upsilon}_\xi \big(\Gamma_{k+1}(z_{(k+1)})\big)$ dans la quatrième ligne de (7.62), où $\xi \in \mathbb{C}^d$, sans oublier d'écrire l'identité qui est

sous-entendue pour $\beta = 0$:
(7.138)
$$\begin{cases} \overline{g}_{j'}\left(\underline{\Upsilon}_\xi\left(\Gamma_{k+1}(z_{(k+1)})\right)\right) \equiv \displaystyle\sum_{\gamma'\in\mathbb{N}^{m'}} \left[\overline{f}^{\gamma'}\right]\left(\underline{\Upsilon}_\xi\left(\Gamma_{k+1}(z_{(k+1)})\right)\right)\cdot \\ \qquad\qquad \cdot\, \Theta'_{j',\gamma'}\left(h\left(\underline{\Upsilon}_\xi\left(\Gamma_{k+1}(z_{(k+1)})\right)\right)\right), \\ 0 \equiv \displaystyle\sum_{\gamma'\in\mathbb{N}^{m'}} \left[\overline{f}^{\gamma'}\right]\left(\underline{\Upsilon}_\xi\left(\Gamma_{k+1}(z_{(k+1)})\right)\right)\cdot \\ \qquad\qquad \cdot\, \left[\mathscr{L}^\beta\Theta'_{j',\gamma'}(h)\right]\left(\underline{\Upsilon}_\xi\left(\Gamma_{k+1}(z_{(k+1)})\right)\right). \end{cases}$$

Dans la deuxième identité, on suppose $|\beta| \geq 1$.

Fixons maintenant $\ell \in \mathbb{N}$. Pour démontrer (7.137), appliquons les dérivations $\partial_\xi^\delta\big|_{\xi=0}$ aux identités (7.138) pour tout multiindice $\delta \in \mathbb{N}^d$ tel que $|\delta| \leq \ell$, ce qui donne :
(7.139)
$$\begin{cases} \left[\underline{\Upsilon}^\delta\overline{g}_{j'}\right]\left(\Gamma_{k+1}(z_{(k+1)})\right) \equiv \displaystyle\sum_{\gamma'\in\mathbb{N}^{m'}}\sum_{\delta_1\leq\delta} \frac{\delta!}{\delta_1!\,(\delta-\delta_1)!}\left[\underline{\Upsilon}^{\delta-\delta_1}\overline{f}^{\gamma'}\right]\left(\Gamma_{k+1}(z_{(k+1)})\right)\cdot \\ \qquad\qquad \cdot\, \left[\underline{\Upsilon}^{\delta_1}\Theta'_{j',\gamma'}(h)\right]\left(\Gamma_{k+1}(z_{(k+1)})\right), \\ 0 \equiv \displaystyle\sum_{\gamma'\in\mathbb{N}^{m'}}\sum_{\delta_1\leq\delta} \frac{\delta!}{\delta_1!\,(\delta-\delta_1)!}\left[\underline{\Upsilon}^{\delta-\delta_1}\overline{f}^{\gamma'}\right]\left(\Gamma_{k+1}(z_{(k+1)})\right)\cdot \\ \qquad\qquad \cdot\, \left[\underline{\Upsilon}^{\delta_1}\mathscr{L}^\beta\Theta'_{j',\gamma'}(h)\right]\left(\Gamma_{k+1}(z_{(k+1)})\right), \end{cases}$$

pour tout $j' = 1, \ldots, d'$, tout $\beta \in \mathbb{N}^m$ tel que $|\beta| \geq 1$ et tout $\delta \in \mathbb{N}^d$ tel que $|\delta| \leq \ell$. Vérifions que tous les termes écrits à la deuxième et à la quatrième ligne de (7.139) sont des séries convergentes par rapport à $z_{(k+1)}$. En effet, en remplaçant (t, τ) par $\Gamma_{k+1}(z_{(k+1)})$ dans l'identité conjuguée de (7.82), nous obtenons :
(7.140)
$$\begin{cases} \left[\underline{\Upsilon}^{\delta_1}\mathscr{L}^\beta\Theta'_{j',\gamma'}(h)\right]\left(\Gamma_{k+1}(z_{(k+1)})\right) \equiv P'_{\beta,\delta_1}\Big(J_{z,\tau}^{|\beta|+|\delta_1|}\overline{\Theta}\left(\Gamma_{k+1}(z_{(k+1)})\right), \\ \qquad\qquad \left[J_t^{|\beta|+|\delta_1|}\Theta'_{j',\gamma'}(h)\right]\left(\Gamma_k(z_{(k)})\right)\Big), \end{cases}$$

et tous ces termes sont convergents, grâce à l'hypothèse de récurrence (7.136). Appliquons maintenant le Théorème 2.4 avec l'ordre d'approximation $N = 1$: nous en déduisons qu'il existe une application convergente
(7.141)
$$\begin{cases} z_{(k+1)} \longmapsto \left(\overline{\mathsf{H}}_{i'_1,\delta}(z_{(k+1)})\right)_{1\leq i'_1\leq n',\,|\delta|\leq\ell} \\ \qquad\qquad =: \Big(\left(\overline{\mathsf{F}}_{k',\delta}(z_{(k+1)})\right)_{1\leq k'\leq m',\,|\delta|\leq\ell},\ \left(\overline{\mathsf{G}}_{j',\delta}(z_{(k+1)})\right)_{1\leq j'\leq d',\,|\delta|\leq\ell}\Big), \end{cases}$$

avec $\mathsf{H}_{i'_1,\,\delta_1}(0) = \Upsilon^{\delta_1} h_{i'_1}(0)$, qui satisfait les équations analytiques (7.139), c'est-à-dire telle que :

(7.142)
$$\begin{cases} \overline{\mathsf{G}}_{j',\,\delta}(z_{(k+1)}) \equiv \displaystyle\sum_{\gamma'\in\mathbb{N}^{m'}} \sum_{\delta_1\leq\delta} \frac{\delta!}{\delta_1!\,(\delta-\delta_1)!} \left[\underline{\Upsilon}^{\delta_1}\Theta'_{j',\,\gamma'}(h)\right]\left(\Gamma_{k+1}(z_{(k+1)})\right)\cdot \\ \qquad\qquad \cdot\, \overline{N}_{\gamma',\,\delta-\delta_1}\left(\left(\overline{\mathsf{F}}_{k',\,\delta_2}(z_{(k+1)})\right)_{1\leq k'\leq m',\,\delta_2\leq\delta-\delta_1}\right), \\ 0 \equiv \displaystyle\sum_{\gamma'\in\mathbb{N}^{m'}} \sum_{\delta_1\leq\delta} \frac{\delta!}{\delta_1!\,(\delta-\delta_1)!} \left[\underline{\Upsilon}^{\delta_1}\mathscr{L}^{\beta}\Theta'_{j',\,\gamma'}(h)\right]\left(\Gamma_{k+1}(z_{(k+1)})\right)\cdot \\ \qquad\qquad \cdot\, \overline{N}_{\gamma',\,\delta-\delta_1}\left(\left(\overline{\mathsf{F}}_{k',\,\delta_2}(z_{(k+1)})\right)_{1\leq k'\leq m',\,\delta_2\leq\delta-\delta_1}\right), \end{cases}$$

pour tout $j' = 1,\,\ldots,\,d'$, tout $\beta \in \mathbb{N}^m$ satisfaisant $|\beta| \geq 1$ et tout $\delta \in \mathbb{N}^d$ tel que $|\delta| \leq \ell$. Utilisons maintenant l'équivalence (7.111) avec $\mathsf{x} := z_{(k+1)}$, avec $\mathsf{Q}(\mathsf{x}) := \Gamma_{k+1}(z_{(k+1)})$, avec $\mathsf{T}'_{i'_1,\,\delta_1}(\mathsf{x}) := \overline{\mathsf{H}}_{i'_1,\,\delta_1}(\mathsf{x})$ et pour tout $\delta \in \mathbb{N}^d$ tel que $|\delta| \leq \ell$: nous en déduisons que la même application formelle (7.141) satisfait les équations analytiques développées suivantes :

(7.143)
$$\begin{cases} \left[\underline{\Upsilon}^{\delta}\mathscr{L}^{\beta} g_{j'}\right]\left(\Gamma_{k+1}(z_{(k+1)})\right) \equiv \displaystyle\sum_{\gamma'\in\mathbb{N}^{m'}} \sum_{\delta_1\leq\delta} \frac{\delta!}{\delta_1!\,(\delta-\delta_1)!}\cdot \\ \qquad\qquad \cdot\left[\underline{\Upsilon}^{\delta-\delta_1}\mathscr{L}^{\beta} f^{\gamma'}\right]\left(\Gamma_{k+1}(z_{(k+1)})\right)\cdot \\ \qquad\qquad \cdot\, \overline{M}'_{\delta_1}\Big(\left(\overline{\mathsf{H}}_{i'_1,\,\delta_2}(z_{(k+1)})\right)_{1\leq i'_1\leq n',\,\delta_2\leq\delta_1}, \\ \qquad\qquad\qquad \left[J^{|\delta_1|}_{\tau'}\overline{\Theta}'_{j',\,\gamma'}\right]\left(\overline{\mathsf{H}}_0(z_{(k+1)})\right)\Big), \end{cases}$$

pour tout $j' = 1,\,\ldots,\,d'$, tout $\beta \in \mathbb{N}^m$ et tout $\delta \in \mathbb{N}^d$ tel que $|\delta| \leq \ell$, où nous avons posé $\overline{\mathsf{H}}_0 := \left(\overline{\mathsf{H}}_{i'_1,\,0}\right)_{1\leq i'_1\leq n'}$. Comparons ces identités aux identités de la troisième ligne de (7.62) dans lesquelles on pose $(t,\,\tau) = \underline{\Upsilon}_{\xi}\left(\Gamma_{k+1}(z_{(k+1)})\right)$ et auxquelles on applique la dérivation $\partial^{\delta}_{\xi}(\cdot)\big|_{\xi=0}$, ce qui donne :

(7.144)
$$\begin{cases} \left[\underline{\Upsilon}^{\delta}\mathscr{L}^{\beta} g_{j'}\right]\left(\Gamma_{k+1}(z_{(k+1)})\right) \equiv \displaystyle\sum_{\gamma'\in\mathbb{N}^{m'}} \sum_{\delta_1\leq\delta} \frac{\delta!}{\delta_1!\,(\delta-\delta_1)!}\cdot \\ \qquad\qquad \cdot\left[\underline{\Upsilon}^{\delta-\delta_1}\mathscr{L}^{\beta} f^{\gamma'}\right]\left(\Gamma_{k+1}(z_{(k+1)})\right)\cdot \\ \qquad\qquad \cdot\, \overline{M}'_{\delta_1}\Big(\left(\underline{\Upsilon}^{\delta_2}\overline{h}_{i'_1}\left(\Gamma_{k+1}(z_{(k+1)})\right)\right)_{1\leq i'_1\leq n',\,\delta_2\leq\delta_1}, \\ \qquad\qquad\qquad \left[J^{|\delta_1|}_{\tau'}\overline{\Theta}'_{j',\,\gamma'}\left(\overline{h}\right)\right]\left(\Gamma_{k+1}(z_{(k+1)})\right)\Big), \end{cases}$$

Soustrayons (7.143) de (7.144), ce qui donne :
(7.145)

$$\left\{\begin{array}{l} 0 \equiv \displaystyle\sum_{\gamma' \in \mathbb{N}^{m'}} \sum_{\delta_1 \leq \delta} \frac{\delta!}{\delta_1!\,(\delta-\delta_1)!} \cdot \left[\underline{\Upsilon}^{\delta-\delta_1} \mathscr{L}^{\beta} f^{\gamma'}\right] \big(\Gamma_{k+1}(z_{(k+1)})\big) \cdot \\ \qquad \left(\begin{array}{l} \overline{M}'_{\delta_1}\Big(\big(\underline{\Upsilon}^{\delta_2} \overline{h}_{i'_1}\big(\Gamma_{k+1}(z_{(k+1)})\big)\big)_{1 \leq i'_1 \leq n',\, \delta_2 \leq \delta_1}, \\ \qquad\qquad \left[J_{\tau'}^{|\delta_1|} \overline{\Theta}'_{j',\gamma'}\big(\overline{h}\big)\right]\big(\Gamma_{k+1}(z_{(k+1)})\big)\Big) - \\ -\, \overline{M}'_{\delta_1}\Big(\big(\overline{\mathsf{H}}_{i'_1,\,\delta_2}(z_{(k+1)})\big)_{1 \leq i'_1 \leq n',\, \delta_2 \leq \delta_1}, \\ \qquad\qquad \left[J_{\tau'}^{|\delta_1|} \overline{\Theta}'_{j',\gamma'}\right]\big(\overline{\mathsf{H}}_0(z_{(k+1)})\big)\Big) \end{array}\right) \end{array}\right.,$$

pour tout $j' = 1, \ldots, d'$, tout $\beta \in \mathbb{N}^m$ et tout $\delta \in \mathbb{N}^d$ tel que $|\delta| \leq \ell$. D'après la définition même de $\overline{M}'_{\delta_1}$ donnée à la quatrième ligne de (7.81)), le terme développé à la deuxième et à la troisième ligne de (7.145) s'identifie à $\left[\underline{\Upsilon}^{\delta_1} \overline{\Theta}'_{j',\gamma'}\big(\overline{h}\big)\right]\big(\Gamma_{k+1}(z_{(k+1)})\big)$. Notons que le terme développé à la quatrième et à la cinquième ligne de (7.145) est convergent. Ainsi, pour conclure que les propriétés de convergence (7.137) sont satisfaites (en utilisant au passage le Lemme 7.74), il ne nous reste plus qu'à établir que les termes contenus dans les grandes parentèses s'annulent tous identiquement.

Écrivons (7.145) pour $\delta = 0$: la somme $\sum_{\delta_1 \leq \delta}$ contient alors un seul terme et le Lemme 7.130 s'applique. En raisonnant par récurrence sur la longueur de δ, jusqu'à la longueur ℓ, en écrivant les identités (7.145) pour $|\delta|$ croissant, et en appliquant le Lemme 7.130 à chaque étape, nous vérifions que les termes contenus dans les grandes parentèses s'annulent tous identiquement.

Les démonstrations de la Proposition 7.18 et du Théorème 1.23 sont achevées. □

7.146. Existence d'applications holomorphes. Pour terminer cet article, démontrons le corollaire suivant du Théorème 1.23, qui implique le Corollaire 1.45.

Corollary 7.147. *Sous les hypothèses du Théorème 1.23, pour tout entier* $N \geq 1$, *il existe une application convergente* $\mathsf{H}^N(t) \in \mathbb{C}\{t\}^{n'}$ *avec* $\mathsf{H}^N(t) \equiv h(t) \bmod (\mathfrak{m}(t))^N$ (*d'où* $H(0) = 0$), *qui induit une application holomorphe locale de* M *à valeurs dans* M'.

Proof. D'après le Théorème 1.23, les composantes $\Theta'_{j',\gamma'}(h(t))$ de l'application de réflexion s'identifient à des séries convergentes $\theta'_{j',\gamma'}(t) \in \mathbb{C}\{t\}$, pour tout $j' = 1, \ldots, d'$ et tout $\gamma' \in \mathbb{N}^{m'}$. Appliquons le Théorème d'approximation 2.4 aux équations analytiques

$$0 \equiv \Theta'_{j',\gamma'}(h(t)) - \theta'_{j',\gamma'}(t). \tag{7.148}$$

Nous en déduisons que pour tout entier $N \geq 1$, il existe une application convergente $\mathsf{H}^N(t) \in \mathbb{C}\{t\}^{n'}$ avec $\mathsf{H}^N(t) \equiv h(t) \bmod (\mathfrak{m}(t))^N$ qui satisfait ces équations analytiques, *i.e.* :

$$0 \equiv \Theta'_{j',\gamma'}\left(\mathsf{H}^N(t)\right) - \theta'_{j',\gamma'}(t). \tag{7.149}$$

Nous affirmons que *toute telle* H^N *induit nécessairement une application holomorphe locale de* M *à valeurs dans* M'. En effet, il découle d'abord de (7.148) et de (7.149) que $\Theta'_{j',\gamma'}(h(t)) \equiv \Theta'_{j',\gamma'}(\mathsf{H}^N(t))$ et ensuite :

$$\begin{cases} \overline{g}_{j'}(\zeta,\, \Theta(\zeta,\, t)) \equiv \displaystyle\sum_{\gamma' \in \mathbb{N}^{m'}} \left[\overline{f}^{\gamma'}\right](\zeta,\, \Theta(\zeta,\, t)) \cdot \Theta'_{j',\gamma'}(h(t)) \\ \qquad\qquad\qquad \equiv \displaystyle\sum_{\gamma' \in \mathbb{N}^{m'}} \left[\overline{f}^{\gamma'}\right](\zeta,\, \Theta(\zeta,\, t)) \cdot \Theta'_{j',\gamma'}(\mathsf{H}^N(t)), \end{cases} \tag{7.150}$$

pour tout $j' = 1, \ldots, d'$. Autrement dit, nous avons : $r'_{j'}\left(\mathsf{H}^N(t),\, \overline{h}(\zeta,\, \Theta(\zeta,\, t))\right) \equiv 0$, pour tout $j' = 1, \ldots, d'$. En remplaçant τ' par $\overline{h}(\zeta,\, \Theta(\zeta,\, t))$ et t' par $\mathsf{H}^N(t)$ dans la première ligne de la deuxième colonne de (7.44), nous en déduisons :

$$\begin{cases} 0 \equiv \overline{r}'_{j'}\left(\overline{h}(\zeta,\, \Theta(\zeta,\, t)),\, \mathsf{H}^N(t)\right) \\ \quad \equiv \mathsf{G}^N_{j'}(t) - \displaystyle\sum_{\gamma' \in \mathbb{N}^{m'}} \mathsf{F}^N(t)^{\gamma'} \cdot \overline{\Theta}'_{j',\gamma'}\left(\overline{h}\left(\zeta,\, \Theta(\zeta,\, t)\right)\right), \end{cases} \tag{7.151}$$

pour tout $j' = 1, \ldots, d'$. Remplaçons alors w par $\overline{\Theta}(z,\, \tau)$ dans ces identités, en tenant compte de la relation $\xi \equiv \Theta\left(\zeta,\, z,\, \overline{\Theta}(z,\, \tau)\right)$, qui découle immédiatement de (3.7), ce qui donne :

$$\mathsf{G}^N_{j'}\left(z,\, \overline{\Theta}(z,\, \tau)\right) \equiv \sum_{\gamma' \in \mathbb{N}^{m'}} \mathsf{F}^N\left(z,\, \overline{\Theta}(z,\, \tau)\right)^{\gamma'} \cdot \overline{\Theta}'_{j',\gamma'}\left(\overline{h}(\tau)\right), \tag{7.152}$$

pour tout $j' = 1, \ldots, d'$.

Enfin, pour terminer, remplaçons $\overline{\Theta}'_{j',\gamma'}\left(\overline{h}(\tau)\right)$ par $\overline{\Theta}'_{j',\gamma'}\left(\overline{H}^N(\tau)\right)$ dans ces identités (cela est possible, grâce aux conjuguées des relations (7.148) et (7.149)), ce qui donne :

$$\mathsf{G}_{j'}\left(z,\, \overline{\Theta}(z,\, \tau)\right) \equiv \sum_{\gamma' \in \mathbb{N}^{m'}} \mathsf{F}^N\left(z,\, \overline{\Theta}(z,\, \tau)\right)^{\gamma'} \cdot \overline{\Theta}'_{j',\gamma'}\left(\overline{\mathsf{H}}^N(\tau)\right), \tag{7.153}$$

pour tout $j' = 1, \ldots, d'$. Ces dernières identités démontrent clairement que H^N induit une application de M à valeurs dans M'. Le corollaire (7.147) est démontré. □

REFERENCES

[Ar1968] ARTIN, M.: *On the solutions of analytic equations*, Invent. Math. **5** (1968), 277–291.

[Ar1969] ARTIN, M.: *Algebraic approximation of structures over complete local rings*, Inst. Hautes Études Sci. Publ. Math. **36** (1969), 23–58.

[BR1988] BAOUENDI, M.S.; ROTHSCHILD, L.P.: *Germs of CR maps between real analytic hypersurfaces*, Invent. Math. **93** (1988), no. 3, 481–500.

[BR1990] BAOUENDI, M.S.; ROTHSCHILD, L.P.: *Geometric properties of mappings between hypersurfaces in complex space*, J. Differential Geom. **31** (1990), 473–499.

[BR1995] BAOUENDI, M.S.; ROTHSCHILD, L.P.: *Mappings of real algebraic hypersurfaces*, J. Amer. Math. Soc. **8** (1995), 997–1015.

[BER1996] BAOUENDI, M.S.; EBENFELT, P.; ROTHSCHILD, L.P.: *Algebraicity of holomorphic mappings between real algebraic sets in* $\mathbb{C}^n$, Acta Math. **177** (1996), no. 2, 225–273.

[BER1997] BAOUENDI, M.S.; EBENFELT, P.; ROTHSCHILD, L.P.: *Parametrization of local biholomorphisms of real analytic hypersurfaces*, Asian J. Math. **1** (1997), no. 1, 1–16.

[BER1998] BAOUENDI, M.S.; EBENFELT, P.; ROTHSCHILD, L.P.: *CR automorphisms of real analytic manifolds in complex space*, Comm. Anal. Geom. **6** (1998), 291–315.

[BER1999a] BAOUENDI, M.S.; EBENFELT, P.; ROTHSCHILD, L.P.: *Real submanifolds in complex space and their mappings*. Princeton Mathematical Series, **47**, Princeton University Press Princeton, NJ, 1999, xii+404 pp.

[BER1999b] BAOUENDI, M.S.; EBENFELT, P.; ROTHSCHILD, L.P.: *Rational dependence of smooth and analytic CR mappings on their jets*, Math. Ann. **315** (1999), 205–249.

[BER2000] BAOUENDI, M.S.; EBENFELT, P.; ROTHSCHILD, L.P.: *Convergence and finite determination of formal CR mappings*, J. Amer. Math. Soc. **13** (2000) 697–723.

[BER2003] BAOUENDI, M.S.; EBENFELT, P.; ROTHSCHILD, L.P.: *Dynamics of the Segre varieties of a real submanifold in complex space*, J. Algebraic Geom. **12** (2003), no. 1, 81–106.

[BJT1985] BAOUENDI, M.S.; JACOBOWITZ, H.; TREVES, F.: *On the analyticity of CR mappings*, Ann. of Math. **122** (1985), no. 2, 365–400.

[BMR2002] BAOUENDI, M.S.; MIR, N.; ROTHSCHILD, L.P.: *Reflection ideals and mappings between generic submanifolds in complex space*, J. Geom. Anal. **12** (2002), no. 4, 543–580. Preprint électronique : `arXiv/abs/math/0012243`.

[BRZ2001] BAOUENDI, M.S.; ROTHSCHILD, L.P.; ZAITSEV, D.: *Equivalences of real submanifolds in complex space*, J. Differential Geom. **59** (2001), no. 2, 301–351.

[CM1974] CHERN, S.-S.; MOSER, J.K.: *Real hypersurfaces in complex manifolds*, Acta Math. **133** (1974), 219–271.

[CMS1999] COUPET, B.; MEYLAN, F.; SUKHOV, A.: *Holomorphic maps of algebraic CR manifolds*, Internat. Math. Res. Notices **1999**, no. 1, 1–29.

[CPS1999] COUPET, B.; PINCHUK, S.; SUKHOV, A.: *Analyticité des applications CR*, C. R. Acad. Sci. Paris Sér. I Math. **329** (1999), no. 6, 489–494.

[CPS2000] COUPET, B.; PINCHUK, S.; SUKHOV, A.: *On partial analyticity of CR mappings*, Math. Z. **235** (2000), 541–557.

[CDMS2002] COUPET, B.; DAMOUR, S.; MERKER, J.; SUKHOV, A.: *Sur l'analyticité des applications CR lisses à valeurs dans un ensemble algébrique réel*, C. R. Acad. Sci. Paris Sér. I **334** (2002), 953–956.

[Da2001] DAMOUR, S.: *On the analyticity of smooth CR mappings between real analytic CR manifolds*, Michigan Math. J. **49** (2001), no. 3, 583–603.

[DM2002] DAMOUR, S.; MERKER, J.: *Sur la convergence d'applications formelles entre sous-variétés analytiques réelles*, Bull. Sci. Math. **126** (2002), 831–854.

[De1985] DERRIDJ, M.: *Le principe de réflexion en des points de faible pseudoconvexité pour des applications holomorphes propres*, Invent. Math. **79** (1985), no. 1, 197–215.

[De1986] DERRIDJ, M.: *Sur le prolongement d'applications holomorphes*, Séminaire sur les équations aux dérivées partielles, 1985–1986, Exp. No. XVI, 10 pp., École Polytech., Palaiseau, 1986.

[DF1978] DIEDERICH, K.; FORNÆSS, J.E.: *Pseudoconvex domains with real analytic boundary*, Ann. of Math. **107** (1978), no. 2, 371–384.

[DF1988] DIEDERICH, K.; FORNÆSS, J.E.: *Proper holomorphic mappings between real-analytic pseudoconvex domains in* $\mathbb{C}^n$, Math. Ann. **282** (1988), no. 4, 681–700.

[DW1980] DIEDERICH, K.; WEBSTER, S.M.: *A reflection principle for degenerate real hypersurfaces*, Duke Math. J. **47** (1980), no. 4, 835–843.

[DFY1994] DIEDERICH, K.; FORNÆSS, J.E.; YE, Z.: *Biholomorphisms in dimension 2*, J. Geom. Anal. **4** (1994), no. 4, 539–552.

[DP1995] DIEDERICH, K.; PINCHUK, S.: *Proper holomorphic maps in dimension 2 extend*, Indiana Univ. Math. J. **44** (1995), no. 4, 1089–1126.

[DP1998] DIEDERICH, K.; PINCHUK, S.: *Reflection principle in higher dimensions*, Proceedings of the International Congress of Mathematicians, Vol II (Berlin 1998), Doc. Math. 1998, Extra Vol. II, 703–712.

[DP2003] DIEDERICH, K.; PINCHUK, S.: *Regularity of continuous CR-maps in arbitrary dimension*, Michigan Math. J. **51** (2003), 111–140.

[Eb1998] EBENFELT, P.: *Normal forms and biholomorphic equivalence of real hypersurfaces in* $\mathbf{C}^3$, Indiana Univ. Math. J. **47** (1998), no. 2, 311–366.

[Eb2002] EBENFELT, P.: *On the analyticity of CR mappings between nonminimal hypersurfaces*, Math. Ann. **322** (2002), no. 3, 583–602.

[Fo1991] FORSTNERIČ, F.: *Extending proper holomorphic mappings of positive codimension*, Invent. Math. **95** (1989), no. 1, 31–62.

[GM2003] GAUSSIER, H.; MERKER, J.: *Symmetries of partial differential equations*, J. Korean Math. Soc. **40** (2003), no. 3, 517–561.

[GM2004] GAUSSIER, H.; MERKER, J.: *Nonalgebraizable real analytic tubes in* $\mathbb{C}^n$, Math. Z. DOI: 10.1007/s00209-003-0617-9.

[Go1996] GONG, X.: *Divergence of the normalization for real Lagrangian surfaces near complex tangents*, Pacific Math. J. **176** (1996), 311–324.

[Ha1983] HAN, C.K.: *Analyticity of CR equivalences between some real analytic hypersurfaces in* $\mathbb{C}^n$ *with degenerate Levi-forms*, Invent. Math **73** (1983), no. 1, 51–69.

[Ha1990] HAN, C.K.: *Rigidity of CR submanifolds and analyticity of CR immersions*, Math. Ann. **287** (1990), no. 2, 229–238.

[Hi1973] HIRONAKA, H.: *Introduction to real-analytic sets and real-analytic maps*, Quaderni dei Gruppi di Ricerca Matematica del Consiglio Nazionale delle Ricerche, Istituto Matematico «L. Tonelli» dell'Università di Pisa, 1973, iii+162 pp.

[HK1995] HUANG, X.; KRANTZ, S.G.: *On a problem of Moser*, Duke Math. J. **78** (1995), no. 1, 213–228.

[La2000] LAMEL, B.: *Holomorphic maps of real submanifolds in complex spaces of different dimensions*, Pacific Math. J. **201** (2001), no. 2, 357–387.

[Le1977] LEWY, H.: *On the boundary behaviour of holomorphic mappings*, Contrib. Centro Linceo Inter. Sc. Mat. e Loro Appl. No. 35, Accad. Naz. Lincei

(1977), 1–8 ; reprint in the *Hans Lewy Selecta*, 2 vols, *Contemporary mathematicians*, Birkhäuser, Boston, 2002.

[Ma1967] MALGRANGE, B.: *Ideals of Differentiable Functions*, Tata Institute of Fundamental Research Studies in Mathematics, No. 3, Tata Institute of Fundamental Research, Bombay; Oxford University Press, London, 1967, vii+106 pp.

[Me1994] MERKER, J.: *Global minimality of generic manifolds and holomorphic extendibility of CR functions*. Internat. Math. Res. Notices **1994**, no. 8, 329–342.

[Me1997a] MERKER, J.: *On removable singularities for CR functions in higher codimension*, Internat. Math. Res. Notices **1997**, no. 1, 21–56.

[Me1997b] MERKER, J.: *On the Schwarz symmetry principle in three-dimensional complex euclidean space*, Prépublication de l'École Normale Supérieure, **25** (1997), 62 pp.

[Me1998] MERKER, J.: *Vector field construction of Segre sets*, Preprint 1998, augmented in 2000; downloadable at `arXiv.org/abs/math.CV/9901010`.

[Me1999] MERKER, J.: *On the convergence of S-nondegenerate formal CR maps between real analytic CR manifolds*, Preprint, 1999; downloadable at: `arXiv.org/abs/math.CV/9901027`.

[Me2000] MERKER, J.: *Étude de la régularité analytique de l'application de symétrie CR formelle*, Preprint, June 2000; downloadable at: `arXiv.org/math/abs/0005290`.

[Me2001a] MERKER, J.: *On the partial algebraicity of holomorphic mappings between two real algebraic sets in the complex euclidean spaces of different dimensions*, Bull. Soc. Math. France **129** (2001), no. 4, 547–591.

[Me2001b] MERKER, J.: *Convergence of formal invertible CR mappings between minimal holomorphically nondegenerate real analytic hypersurfaces*, Int. J. Math. Math. Sci., **26** (2001), no. 5, 281–302.

[Me2001c] MERKER, J.: *Étude de la régularité analytique de l'application de symétrie CR formelle*, C. R. Acad. Sci. Paris Sér. I Math. **333** (2001), no. 3, 165–168.

[Me2001d] MERKER, J.: *Note on double reflection and algebraicity of holomorphic mappings*, Annales de la faculté des sciences de Toulouse **9** (2001), no. 5, 689–721.

[Me2002] MERKER, J.: *On envelopes of holomorphy of domains covered by Levi-flat hats and the reflection principle*, Ann. Inst. Fourier Grenoble **52** (2002), no. 5, 1443–1523.

[Me2003] MERKER, J.: *On the local geometry of generic submanifolds of $\mathbb{C}^n$ and the analytic reflection principle* (Part I), Viniti, Kluwer, to appear, 80 pp.

[Me2004] MERKER, J.: *Systèmes complètement intégrables d'équations aux dérivées partielles analytiques : géométrie locale des sous-variétés des solutions*, en préparation.

[MM1999] MERKER, J.; MEYLAN, F.: *On the Schwarz symmetry principle in a model case*, Proc. Amer. Math. Soc. **127**, (1999), no. 4, 1097–1102.

[MMZ2002] MEYLAN, F.; MIR, N.; ZAITSEV, D.: *Holomorphic extension of smooth CR-mappings between real-analytic and real-algebraic CR-manifolds*, preprint, january 2001; downloadable at `http://arXiv.org/abs/math.CV/0201267`.

[MMZ2003] MEYLAN, F.; MIR, N.; ZAITSEV, D.: *Approximation and convergence of formal CR-mappings*, Int. Math. Res. Not. **2003**, no. 4, 211–242.

[Mi1998] MIR, N.: *Germs of holomorphic mappings between real algebraic hypersurfaces*, Ann. Inst. Fourier Grenoble **48** (1998), no. 3, 1025–1043.

[Mi2002] MIR, N.: *On the convergence of formal mappings*, Comm. Anal. Geom. **10** (2002), no. 1, 23–59.

[Mi2000] MIR, N.: *Formal biholomorphic maps of real analytic hypersurfaces*, Math. Research Lett. **7** (2000), no. 2-3, 343–359.

[MW1983] MOSER, J.K.; WEBSTER, S.M.: *Normal forms for real surfaces in $\mathbb{C}^2$ near complex tangents and hyperbolic surface transformations*, Acta Math. **150** (1983), no. 3-4, 255–296.

[Na1966] NAGANO, T.: *Linear differential systems with singularities and applications to transitive Lie algebras*, J. Math. Soc. Japan **18** (1966), 398–404.

[Ne1997] NEELON, T.S.: *On solutions of real analytic equations*, Proc. Amer. Math. Soc. **125** (1997), no. 3, 2531–2535.

[Pi1975] PINCHUK, S.: *On the analytic continuation of holomorphic mappings* (Russian), Mat. Sb. (N.S.) **98(140)** (1975) no. 3 (11), 375–392, 416–435, 495–496.

[Pi1978] PINCHUK, S.: *Holomorphic mappings of real-analytic hypersurfaces* (Russian), Mat. Sb. (N.S.) **105(147)** (1978), no. 4, 574–593, 640.

[PV2001] PINCHUK, S.: VERMA, K.: *Analytic sets and the boundary regularity of CR mappings*, Proc. Amer. Math. Soc. **129** (2001), no. 9, 2623–2632.

[Pu1990] PUSHNIKOV, Y.: *Holomorphicity of CR-mappings into a space of large dimension*, Mat. Zametki **48** (1990), no. 3, 147–149.

[Sch1870] SCHWARZ, K.H.A.: *Ueber einige Abbildungsaufgaben*, Journal für reine und angewandte Mathematik, 1870, 105–120.

[Se1931a] SEGRE, B.: *Questioni geometriche legate colla teoria delle funzioni di due variabili complesse*, Bollettino della unione matematica italiana, **10** (1931), 269–274.

[Se1931b] SEGRE, B.: *Intorno al problema di Poincaré della rappresentazione pseudoconforme*, Rend. Acc. Lincei, VI, Ser. **13** (1931), 676–683.

[Se1932] SEGRE, B.: *Questioni geometriche legate colla teoria delle funzioni di due variabili complesse*, Rend. Sem. Mat. Roma, II (memorie), Ser. 7 (1932), no. 2, 59–107.

[Sh2000] SHAFIKOV, R.: *Analytic continuation of germs of holomorphic mappings between real hypersurfaces in $\mathbb{C}^n$*, Michigan Math. J. **47** (2000), no. 1, 133–149.

[Sh2003] SHAFIKOV, R.: *Analytic continuation of holomorphic correspondences and equivalence of domains in $\mathbb{C}^n$*, Invent. Math. **152** (2003), no. 3, 665–682.

[SS1996] SHARIPOV, R.; SUKHOV, A.: *On CR mappings between algebraic Cauchy-Riemann manifolds and separate algebraicity for holomorphic functions*, Trans. Amer. Math. Soc. **348** (1996), no. 2, 767–780.

[St1995] STANTON, N.: *Infinitesimal CR automorphisms of rigid hypersurfaces of the space of n complex variables*, Amer. J. Math., **117** (1995), no. 1, 141–167.

[St1996] STANTON, N.: *Infinitesimal CR automorphisms of real hypersurfaces*, Amer. J. Math. **118** (1996), no. 1, 209–233.

[Su1973] SUSSMANN, H.J., *Orbits of families of vector fields and integrability of distributions*, Trans. Amer. Math. Soc. **180** (1973), 171-188.

[Te1996] TEISSIER, B.: *Communication orale*.

[Tr1986] TRÉPREAU, J.-M.: *Sur le prolongement holomorphe des fonctions CR définies sur une hypersurface réelle de classe $\mathscr{C}^2$ dans $\mathbb{C}^n$*, Invent. Math. **83** (1986), 583–592.

[Tr1990] TRÉPREAU, J.-M.: *Sur la propagation des singularités dans les variétés CR*, Bull. Soc. Math. Fr. **118** (1990), no. 4, 403–450.

[Tr2000] TRÉPREAU, J.-M.: *Recension du livre* [BER1999b], Gazette des mathématiciens, **85** (2000), 82–84.

[Tu1988] TUMANOV, A.E.: *Extending CR functions on a manifold of finite type over a wedge* (Russian), Mat. Sb. (N.S.) **136(178)** (1988), no. 1, 128–139. English transl. in Math. USSR-Sb. **64** (1989) no. 1, 129–140.

[Tu1994] TUMANOV, A.E.: *Connections and propagation of analyticity for CR functions*, Duke Math. J. **73** (1994), no. 1, 1–24.

[VdW1970] VAN DER WAERDEN, B.L.: *Algebra*, Vol 1 and 2. Translated by Fred Blum and John R. Schulenberger Frederick Ungar Publishing Co., New York 1970 xiv+265 pp.

[We1977] WEBSTER, S.M.: *On the mapping problem for algebraic real hypersurfaces*, Invent. Math. **43** (1977), no. 1, 53–68.

[We1978] WEBSTER, S.M.: *On the reflection principle in several complex variables*, Proc. Amer. Math. Soc. **71** (1978), no. 1, 26–28.

[We1982] WEBSTER, S.M.: *Holomorphic mappings of domains with generic corners*, Proc. Amer. Math. Soc. **86** (1982), no. 2, 236–240.

[We1992] WEBSTER, S.M.: *Holomorphic symplectic normalization of a real function*, Ann. Scuola Norm. Sup. Pisa Cl. Sci. **(4) 19** (1992), no. 1, 69–86.

[Za1997] ZAITSEV, D.: *Germs of local automorphisms of real-analytic CR structures and analytic dependence on k-jets*, Math. Research Lett. **4** (1997), no. 6, 823–842.

[ZS1960] ZARISKI, O.; SAMUEL, P.: *Commutative algebra*, 2 vols, The University Series in Higher Mathematics, D. Van Nostrand Co., Inc., Princeton, N. J., Toronto-London-New York, 1958, 1960.

ABSTRACT. Searching normal forms[1] for real analytic submanifolds of $\mathbb{C}^n$ involves convergence problems. In 1983, J.K. Moser and S.M. Webster provided examples of real analytic surfaces in $\mathbb{C}^2$ having an isolated hyperbolic (in the sense of E. Bishop) complex tangency, which are formally but not holomorphically normalizable (because of the presence of small divisors), even if the normal form is itself real analytic or algebraic. On the contrary, it appears that such a nonconvergence phenomenon does not appear for submanifolds of $\mathbb{C}^n$ whose CR dimension is locally constant, in view of recent results by S.M. Baouendi, P. Ebenfelt and L.P. Rothschild. These results hold true with hypotheses which are relatively simple, but satisfied at a Zariski-generic point[2]. Notably, these authors establish that every invertible formal CR mapping between two submanifolds of $\mathbb{C}^n$ which are real analytic, generic, finitely nondegenerate and minimal (in the sense of J.-M. Trépreau and A.E. Tumanov) is convergent. In this paper, we establish a more general convergence theorem, which is valid without any nondegeneracy condition, and which confirms the rigidity of the CR category (*see* Theorem 1.23). This result may be interpreted as a formal Schwarz reflection principle for CR mappings. We deduce that every formal CR equivalence between two submanifolds of $\mathbb{C}^n$ which are real analytic, generic and minimal is convergent if and only if both submanifolds are holomorphically nondegenerate (in the sense of N. Stanton). Finally, we establish that two submanifolds of $\mathbb{C}^n$ which are real analytic, generic and minimal are formally CR equivalent if and only if they are biholomorphically equivalent.

On envelopes of holomorphy of domains covered by Levi-flat hats and the reflection principle

Joël Merker

Abstract. In the present paper, we associate the techniques of the Lewy-Pinchuk reflection principle with the Behnke-Sommer continuity principle. Extending a so-called *reflection function* to a parameterized congruence of Segre varieties, we are led to studying the envelope of holomorphy of a certain domain covered by a smooth Levi-flat "hat". In our main theorem, we show that every $\mathscr{C}^\infty$-smooth CR diffeomorphism $h : M \to M'$ between two globally minimal real analytic hypersurfaces in $\mathbb{C}^n$ ($n \geq 2$) is real analytic at every point of M if M' is holomorphically nondegenerate. More generally, we establish that the reflection function $\mathscr{R}'_h$ associated to such a $\mathscr{C}^\infty$-smooth CR diffeomorphism between two globally minimal hypersurfaces in $\mathbb{C}^n$ ($n \geq 1$) always extends holomorphically to a neighborhood of the graph of $\bar{h}$ in $M \times \overline{M'}$, without any nondegeneracy condition on M'. This gives a new version of the Schwarz symmetry principle to several complex variables. Finally, we show that every $\mathscr{C}^\infty$-smooth CR mapping $h : M \to M'$ between two real analytic hypersurfaces containing no complex curves is real analytic at every point of M, without any rank condition on h.

Annales de l'Institut Fourier, **52** (2002), no. 5, 1443–1523

Table of contents :

§1. Introduction and presentation of the results ..... **105.**
§2. Description of the proof of Theorem 1.2 ..... **114.**
§3. Biholomorphic invariance of the reflection function ..... **121.**
§4. Extension across a Zariski dense open subset of M ..... **134.**
§5. Situation at a typical point of non-analyticity ..... **139.**
§6. Envelopes of holomorphy of domains with Levi-flat hats ..... **144.**
§7. Holomorphic extension to a Levi-flat union of Segre varieties ..... **151.**
§8. Relative position of the neighbouring Segre varieties ..... **155.**
§9. Analyticity of some degenerate $\mathscr{C}^\infty$-smooth CR mappings ..... **157.**
§10. Open problems and conjectures ..... **166.**

§1. Introduction and presentation of the results

1.1. Main theorem. Let $h : M \to M'$ be a $\mathscr{C}^\infty$-smooth CR diffeomorphism between two geometrically smooth real analytic hypersurfaces in $\mathbb{C}^n$ $(n \geq 2)$. Call M *globally minimal* (in the sense of Trépreau-Tumanov) if it consists of a single CR orbit ([Tr1,2], [Tu1,2], [Me1], [MP1]). Call M' *holomorphically nondegenerate* (in the sense of Stanton) if there does not exist any nonzero $(1,0)$ vector field with holomorphic coefficients which is tangent to a nonempty open subset of M ([St1,2]). Our principal result is as follows.

Theorem 1.2. *If M is globally minimal and if M' is holomorphically nondegenerate, then the $\mathscr{C}^\infty$-smooth CR diffeomorphism h is real analytic at every point of M.*

Compared to classical results of the literature, in this theorem, no pointwise, local or not propagating nondegeneracy condition is imposed on M', like for instance M' be Levi nondegenerate, finitely nondegenerate or essentially finite at every point. With respect to the contemporary state of the art, the novelty in Theorem 1.2 lies in the treatment of the locus of non-essentially finite points, which is a proper real analytic subvariety of M', provided M' is holomorphically nondegenerate. There is also an interesting invariant to study, more general than h, namely the *reflection function* $\mathscr{R}'_h$. Because the precise definition of $\mathscr{R}'_h$ involves a concrete defining equation of M', it must be localized around various points $p' \in M'$, so we refer to §1.7 below for a complete presentation. Generalizing Theorem 1.2, we show that $\mathscr{R}'_h$ extends holomorphically to a neighborhood of each point $(p, \overline{h(p)}) \in M \times \overline{M}'$, assuming only that M is globally minimal and without any nondegeneracy condition on M' (Theorem 1.9). We deduce in fact Theorem 1.2 from the extendability of $\mathscr{R}'_h$. This strategy of proof is inspired from the deep works of Diederich-Pinchuk [DP1,2] (*see* also [V], [Sha], [PV]) where the extension as a mapping is derived from the extension as a correspondence.

In the sequel, we shall by convention sometimes denote by (M, p) a *small connected piece* of M localized around a "center" point $p \in M$. However, since all our considerations are semi-local and of geometric nature, we shall *never* use the language of germs.

1.3. Development of the classical results and brief history. The earliest extension result like Theorem 1.2 was found independently by Pinchuk [P3] and after by Lewy [L]: if (M, p) and (M', p') are strongly pseudoconvex, then h is real analytic at p. The classical proof in [P3] and [L] makes use of the so-called *reflection principle* which consists to *solve* first the mapping h with respect to the jets of $\bar{h}$ (by this, we mean a relation like $h(q) = \Omega(q, \bar{q}, j^k\bar{h}(\bar{q}))$ where Ω is holomorphic in its arguments and $q \in M$, *cf.* (4.10) below) and to apply afterwards the one-dimensional Schwarz symmetry principle in a foliated union of transverse holomorphic discs. In 1978 and in 1982, Webster [W2,3] extended this result to Levi nondegenerate CR manifolds of higher codimension. Generalizing this principle, Diederich-Webster proved in 1980 that a sufficiently smooth CR diffeomorphism is analytic at $p \in M$ if M is generically Levi-nondegenerate and the morphism of jets of Segre varieties of M' is injective (*see* §2 of the fundamental article [DW] and (1.11) below for a definition of the Segre morphism). In 1983, Han [Ha] generalized the reflection principle for CR

diffeomorphisms between what is today called *finitely nondegenerate* hypersurfaces (*see* [BER2]). In 1985, Derridj [De] studied the reflection principle for proper mappings between some model classes of weakly pseudoconvex boundaries in $\mathbb{C}^2$. In 1985, Baouendi-Jacobowitz-Treves [BJT] proved that every $\mathscr{C}^\infty$-smooth CR diffeomorphism $h : (M, p) \to (M', p')$ between two real analytic CR-generic manifolds in $\mathbb{C}^n$ which extends holomorphically to a fixed wedge of edge M, is real analytic, provided (M', p') is essentially finite. After the work of Rea [R], in which holomorphic extension to one side of CR functions on a minimal real analytic hypersurface was proved (the weakly pseudoconvex case, which is not very different, was treated long before in a short note by Bedford-Fornæss [BeFo]; *see* also [BT2]), after the work of Tumanov [Tu1], who proved wedge extendability in general codimension, and after the work of Baouendi-Rothschild [BR3], who proved the necessity of minimality for wedge extension (in the meanwhile, Treves provided a simpler argument of necessity), it was known that the automatic holomorphic extension to a fixed wedge of the components of h holds *if and only if* (M, p) is minimal in the sense of Tumanov. Thus, the optimal extendability result in [Tu1] strengthened considerably the main theorem of [BJT]. In the late eighties, the research on the analyticity of CR mappings has been pursued by many authors intensively. In 1987–88, Diederich-Fornæss [DF2] and Baouendi-Rothschild [BR1] extended this kind of reflection principle to the non diffeomorphic case, namely for a $\mathscr{C}^\infty$-smooth CR mapping h between two essentially finite hypersurfaces which is locally finite to one, or locally proper. This result was generalized in [BR2] to $\mathscr{C}^\infty$-smooth mappings $h : (M, p) \to (M', p')$ whose formal Jacobian determinant at p does not vanish identically, again with (M', p') essentially finite. In 1993-6, Sukhov [Su1,2] and Sharipov-Sukhov [SS] generalized the reflection principle of Webster in [W2,3] by introducing a global condition on the mapping, called Levi-transversality. Following this circle of ideas, Coupet-Pinchuk-Sukhov have pointed out in their recent works [CPS1,2] that almost all the above-mentioned variations on the reflection principle find a unified explanation in the fact that a certain complex analytic variety $\mathbb{V}'_p$ is zero-dimensional, which intuitively speaking means that h is *finitely determined by the jets of* $\bar{h}$, *i.e.* more precisely that each components h_j of h satisfies a monic Weierstrass polynomial having analytic functions depending on a finite jet of $\bar{h}$ as coefficients (this observation appears also in [Me3]). They stated thus a general result in the hypersurface case whose extension to a higher codimensional minimal CR-generic source (M, p) was achieved recently by Damour in [Da2]. In sum, this last clarified unification closes up what is attainable in the spirit of the so-called *polynomial identities* introduced in [BJT], yielding a quite general sufficient condition for the analyticity of h. In the arbitrary codimensional case, this general sufficient condition can be expressed simply as follows. Let $\overline{L}_1, \cdots, \overline{L}_m$ be a basis of $T^{0,1}M$, denote $\overline{L}^\beta := \overline{L}_1^{\beta_1} \dots \overline{L}_m^{\beta_m}$ for $\beta \in \mathbb{N}^m$ and let $\rho'_{j'}(t', \bar{t}') = 0$, $1 \leq j' \leq d'$, be a collection of real analytic defining

equations for a generic (M', p') of codimension d'. Then the complex analytic variety, called the (first) *characteristic variety* in [CPS1,2], [Da1,2]:

$$\mathbb{V}'_p := \{t' \in \mathbb{C}^n : \overline{L}^\beta[\rho'(t', \bar{h}(\bar{t}))]|_{\bar{t}=\bar{p}} = 0, \ \forall\, \beta \in \mathbb{N}^m\}. \tag{1.4}$$

is always zero-dimensional at $p' \in \mathbb{V}'_p$ in [L], [P3], [W1], [W2], [W3], [DW], [Ha], [De], [BJT], [DF2], [BR1], [BR2], [BR4], [Su1,2], [BHR], [Su1], [Su2], [SS], [BER1], [BER2], [CPS1], [CPS2], [Da] (in [P4], [DFY], [DP1,2], [V], [Sha], [PV], the variety $\mathbb{V}'_p$ is not defined because these authors tackle the much more difficult problem where *no initial regularity assumption* is supposed on the mapping; in [DF2], some cases of non-essentially finite hypersurfaces are admitted). Importantly, the condition $\dim_{p'} \mathbb{V}'_p = 0$ requires (M', p') to be essentially finite.

1.5. Non-essentially finite hypersurfaces. However, it is known that the finest CR-regularity phenomena come down to the consideration of a class of much more general hypersurfaces which are called *holomorphically non-degenerate* by Stanton [St1,2] and which are in general *not essentially finite*. In 1995, Baouendi-Rothschild [BR3] exhibited this condition as a *necessary and sufficient* condition for the algebraicity of a local biholomorphism between two real algebraic hypersurfaces. Thanks to the nonlocality of algebraic objects, they could assume that (M', p') is essentially finite after a small shift of p', which entails again $\dim_{p'} \mathbb{V}'_p = 0$, thus reducing the work to the application of known techniques (even in fact simpler, in the generalization to the higher codimensional case, Baouendi-Ebenfelt-Rothschild came down to a direct application of the algebraic implicit function theorem by solving algebraically h with respect to the jets of $\bar{h}$ [BER1]). Since then however, few works have been devoted to the study of the analytic regularity of smooth CR mapping between *non-essentially finite* hypersurfaces in $\mathbb{C}^n$. It is well known that the main technical difficulties in the subject happen to occur in $\mathbb{C}^n$ for $n \geq 3$ and that a great deal of the obstacles which one naturally encounters can be avoided by assuming that the target hypersurface M' is algebraic (with M algebraic or real analytic), see *e.g.* the works [MM2], [Mi1,2,3], [CPS1] (in case M' is algebraic, its Segre varieties are defined all over the compactification $P_n(\mathbb{C})$ of $\mathbb{C}^n$, which helps much). Finally, we would like to mention the papers of Meylan [Mey], Maire and Meylan [MaMe], Meylan and the author [MM1], Huang, the author and Meylan [HMM] in this respect (nevertheless, after division by a suitable holomorphic function, the situation under study in these works is again reduced to polynomial identities).

1.6. Schwarz's reflection principle in higher dimension. In late 1996, seeking a natural generalization of Schwarz's reflection principle to higher dimension and inspired by the article [DP1], the author (*see* [MM2], [Me3]) pointed out the interest of the so-called *reflection function* $\mathscr{R}'_h$ associated with h. This terminology is introduced *passim* in [Hu, p. 1802]; a different

definition involving one more variable is given in [Me3,5,6,7,8]; the biholomorphic invariance of $\mathscr{R}'_h$ and the important observation that $\mathscr{R}'_h$ should extend holomorphically *without any nondegeneracy condition* on (M', p') appeared for the first time in the preprint versions of [MM2], [Me3].

Indeed, the explicit expression of this function depends on a local defining equation for M', but its holomorphic extendability is independent of coordinates and there are canonical rules of transformation between two reflection functions (*see* §3 below). As the author believes, in the diffeomorphic case and provided M is at least globally minimal, *this function should extend without assuming any nondegeneracy condition on M', in pure analogy with the Schwarzian case $n = 1$.* It is easy to convince oneself that the reflection function is the right invariant to study. In fact, since then, it has been already studied thoroughly in the algebraic and in the formal CR-regularity problems, *see* [Me3,5,6,7,8], [Mi2,3,4]. For instance, the formal reflection mapping associated with a formal CR equivalence between two real analytic CR-generic manifolds in $\mathbb{C}^n$ which are minimal in the sense of Tumanov is convergent (*see* [Mi3,4] for partial results in this direction and [Me6,7,8] for the complete statement). If h is a holomorphic equivalence between two real algebraic CR-generic manifolds in $\mathbb{C}^n$ which are minimal at a Zariski-generic point, then the reflection mapping $\mathscr{R}'_h$ is algebraic (*see* [Mi2] for the hypersurface case and [Me5] for arbitrary codimension). So we expect that totally similar statements hold for smooth mappings between real analytic CR manifolds.

1.7. Analyticity of the reflection function. For our part, we deal in this paper with smooth CR mappings between *hypersurfaces*. Thus, as above, let $h : M \to M'$ be a $\mathscr{C}^\infty$-smooth CR mapping between two connected real analytic hypersurfaces in $\mathbb{C}^n$ with $n \geq 2$. We shall constantly assume that M is globally minimal. Equivalently, M is locally minimal (in the sense of Trépreau-Tumanov) at every point, since M is real analytic (however, there exist $\mathscr{C}^2$-smooth or $\mathscr{C}^\infty$-smooth hypersurfaces in $\mathbb{C}^n$, $n \geq 2$, which are globally minimal but not locally minimal at many point, *see* [J], [MP1]). Postponing generalizations and refinements to further investigation, we shall assume here for simplicity that h is a CR diffeomorphism. Of course, in this case, the assumption of global minimality of (M, p) can then be switched to (M', p'). The associated reflection function $\mathscr{R}'_h$ is a complex function which is defined in a neighborhood of the graph of $\bar{h}$ in $\mathbb{C}^n \times \mathbb{C}^n$ as follows. Localizing M and M' at points $p \in M$ and $p' \in M'$ with $p' = h(p)$, we choose a complex analytic defining equation for M' in the form $\bar{w}' = \Theta'(\bar{z}', t')$, where $t' = (z', w') \in \mathbb{C}^{n-1} \times \mathbb{C}$ are holomorphic coordinates vanishing at p' and where the power series $\Theta'(\bar{z}', t') := \sum_{\beta \in \mathbb{N}^{n-1}} (\bar{z}')^\beta \, \Theta'_\beta(t')$ vanishes at the origin and converges normally in a small polydisc $\Delta_{2n-1}(0, \rho') = \{(\bar{z}', t') \, : \, |\bar{z}'|, |t'| < \rho'\}$, where $\rho' > 0$ and where $|t'| := \max(|t'_1|, \ldots, |t'_n|)$ is the polydisc norm. Here, by reality of M', the holomorphic function Θ' is not arbitrary, it must satisfy

the power series identity $\Theta'(\bar{z}', z', \overline{\Theta}'(z', \bar{z}', \bar{w}')) \equiv \bar{w}'$. Conversely, such a power series satisfying this identity does define a real analytic hypersurface $\bar{w}' = \Theta'(\bar{z}', t')$ of $\mathbb{C}^n$ as can be verified easily ([BER2, Remark 4.2.30]). It is important to notice that once the coordinate system t' is fixed, with the w'-axis not complex tangent to M' at 0, then there is *only one* complex defining equation for M' of the form $\bar{w}' = \Theta'(\bar{z}', t')$.

By definition, the *reflection function* $\mathscr{R}'_h$ associated with h and with such a local defining function for (M', p') is the following function of $2n$ complex variables:

$$(t, \bar{\nu}') \mapsto \bar{\mu}' - \sum_{\beta \in \mathbb{N}^{n-1}} (\bar{\lambda}')^\beta \, \Theta'_\beta(h(t)) =: \mathscr{R}'_h(t, \bar{\nu}'), \tag{1.8}$$

where $\bar{\nu}' = (\bar{\lambda}', \bar{\mu}') \in \mathbb{C}^{n-1} \times \mathbb{C}$. It can be checked rigorously that this function is CR and of class $\mathscr{C}^\infty$ with respect to the variable $t \in M$ in a neighborhood of p and that it is holomorphic with respect to the variable $\bar{\nu}'$ in the polydisc neighborhood $\{|z'| < \rho'\}$ of $\bar{p}'$ in $\mathbb{C}^n$ (*see* Lemma 3.8 below). Let us call the functions $\Theta'_\beta(h(t))$ the *components* of the reflection function. Since M is in particular minimal at the point $p \in M$, the components h_j of the mapping h and hence also the components $\Theta'_\beta(h(t))$ of $\mathscr{R}'_h$ extend holomorphically to a one-sided neighborhood D_p of M at p, obtained by gluing Bishop discs to (M, p). Our first main result is as follows.

Theorem 1.9. *If $h : M \to M'$ is a $\mathscr{C}^\infty$-smooth CR diffeomorphism between two globally minimal real analytic hypersurfaces in $\mathbb{C}^n$, then for every point $p \in M$ and for every choice of a coordinate system vanishing at $p' := h(p)$ as above in which (M', p') is represented by $\bar{w}' = \Theta'(\bar{z}', t')$, the associated reflection function $\mathscr{R}'_h(t, \bar{\nu}') = \bar{\mu}' - \Theta'(\bar{\lambda}', h(t))$ centered at $p \times \overline{p'}$ extends holomorphically to a neighborhood of $p \times \overline{p'}$ in $\mathbb{C}^n \times \mathbb{C}^n$.*

In §3 below, we provide some fundational material about the reflection function. Especially, we prove that the holomorphic extendability to a neighborhood of $p \times \bar{p}'$ does not depend on the choice of a holomorphic coordinate system vanishing at p'. By differentiating (1.8) with respect to $\bar{\nu}'$, we may observe that the holomorphic extendability of $\mathscr{R}'_h$ to a neighborhood of p is equivalent to the following statement: *all the component functions $\Theta'_\beta(h(t)) =: \theta'_\beta(t)$ (an infinite number) extend holomorphically to a fixed neighborhood of p and there exist constants $C, \rho, \rho' > 0$ such that $|t| < \rho \Rightarrow |\theta'_\beta(t)| < C\,(\rho')^{-|\beta|}$* (*see* Lemma 3.16 below). So Theorem 1.9 may be interpreted as follows: instead of asserting that the mapping h extends holomorphically to a neighborhood of p, we state that a certain invariant infinite collection of *holomorphic functions of the components h_j of the mapping* (which depends directly on M') *do extend holomorphically to a neighborhood of p.* The important fact here is that we do not put any extra nondegeneracy condition on M' at p' (except minimality). Another geometric interpretation is as follows. Let $\underline{S}'_{t'} := \{(\bar{\lambda}', \bar{\mu}') \in \mathbb{C}^n \, : \bar{\mu}' = \Theta'(\bar{\lambda}', t')\}$

denote the *conjugate Segre variety* associated with the fixed point having coordinates t' (usually, to define Segre varieties, one fixes instead the point $\bar{\nu}'$; nevertheless conjugate Segre varieties are equally interesting, as argued in [Me4]). Then Theorem 1.9 can be interpreted as saying that the not rigorously defined intuitive "Segre mapping" $t \mapsto \underline{S}'_{h(t)}$ extends holomorphically at p. In fact, the target value of this mapping should be thought to be represented concretely by the defining function of $\underline{S}'_{h(t)}$, namely this intuitive "Segre mapping" *must* (and can only) be represented by the *rigorous* reflection function $(t, \bar{\nu}') \mapsto \bar{\mu}' - \Theta'(\bar{\lambda}', h(t))$. In sum, Theorem 1.9 precisely asserts that the "Segre mapping" extends holomorphically to a neighborhood of $p \times \bar{p}'$, without any nondegeneracy condition on (M', p'). In certain circumstances, *e.g.* when (M', p') is moreover assumed to be Levi-nondegenerate, finitely nondegenerate or essentially finite, one may deduce afterwards, thanks to the holomorphic extendability of the components $\Theta'_\beta(h(t))$, that h itself extends holomorphically at p (*cf.* [DF2], [BR1], [DFY], [DP1,2], [V], [Sha], [PV]). Analogously, in Theorem 1.14 below, we shall derive from Theorem 1.9 above an important expected *necessary and sufficient condition* for h to be holomorphic at p.

1.10. Applications. We give essentially two important applications. Firstly, associated with M', there is an invariant integer $\kappa'_{M'}$ with $0 \leq \kappa'_{M'} \leq n-1$, called the *holomorphic degeneracy degree* of M', which counts the maximal number of $(1,0)$ vector fields with holomorphic coefficients defined in a neighborhood of M' which are tangent to M' and which are linearly independent at a Zariski-generic point. In particular, M' is holomorphically nondegenerate if and only if $\kappa'_{M'} = 0$. Inspired by the geometric reflection principle developed in [DW], [DF4], [F], we can provide another (equivalent) definition of the integer $\kappa'_{M'}$ in terms of the morphism of jets of Segre varieties as follows (*see* also [Me6,7,8]; historically, finite order jets of $\mathscr{C}^\infty$-smooth CR mappings together with finite order jets of the Segre morphism were first studied in the reflection principle by Diederich-Fornaess in [DF4]). By complexifying the variable $\bar{t}'$ as $(\bar{t}')^c =: \tau'$ and by fixing τ', we may consider the *complexified Segre variety* which is defined by $\mathscr{S}'_{\tau'} := \{(w', z') : w' = \overline{\Theta}'(z', \tau')\}$. For some supplementary information about the canonical geometric correspondence between complexified Segre varieties and complexified CR vector fields, we refer the interested reader to [Me4,5]. Let $j^k_{t'}\mathscr{S}'_{\tau'}$ denote the k-jet at the point t' of $\mathscr{S}'_{\tau'}$. This k-jet is in fact defined by differentiating the defining equation of $\mathscr{S}'_{\tau'}$ with respect to z' as follows. For $\beta \in \mathbb{N}^{n-1}$, we denote $|\beta| := \beta_1 + \cdots + \beta_{n-1}$ and $\partial^\beta_{z'} := \partial^{\beta_1}_{z'_1} \cdots \partial^{\beta_{n-1}}_{z'_{n-1}}$. Then the k-jet provides in fact a holomorphic mapping which is defined over the extrinsic complexification $\mathscr{M}' := \{(t', \tau') : w' - \overline{\Theta}'(z', \tau') = 0\}$ of M' as shown in the following definition:

(1.11)

$$j'_k : \mathscr{M}' \ni (t', \tau') \mapsto j^k_{t'}\mathscr{S}'_{\tau'} := (t', \{\partial^\beta_{z'}[w' - \overline{\Theta}'(z', \tau')]\}_{|\beta| \leq k}) \in \mathbb{C}^{n + \frac{(n-1+k)!}{(n-1)!\,k!}}.$$

For k large enough, the analytic properties of these jet mappings j'_k govern the geometry of M', as was pointed out in [DW] for the first time. For instance, Levi nondegeneracy, finite nondegeneracy and essential finiteness of (M', p') may be characterized in terms of the mappings j'_k ([DW], [DF4], [Me6,7,8]). In our case, it is clear that there exists an integer $\chi'_{M'}$ with $1 \leq \chi'_{M'} \leq n$ such that the generic rank of j'_k equals $n - 1 + \chi'_{M'}$ for all k large enough, since the generic ranks increase and are bounded by $2n - 1$. Then the holomorphic degeneracy degree can also be defined equivalently by $\kappa'_{M'} := n - \chi'_{M'}$. We may notice in particular that M' is Levi-flat if and only if $\chi'_{M'} = 1$, since $\overline{\Theta}'(z', \tau') \equiv \tau'_n$ in this case. Consequently, we always have $\chi'_{M'} \geq 2$ in this paper since we constantly assume that M' is globally minimal. The biholomorphic invariance of Segre varieties makes it easy to precise in which sense the jet mapping j'_k is invariantly attached to M', namely how it changes when one varies the coordinate system. Then the fact that $\chi'_{M'}$ is defined in terms of the generic rank of an invariant holomorphic mapping together with the connectedness of M' explains well that the integers $\chi'_{M'}$ and $\kappa'_{M'}$ do not depend on the center point $p' \in M'$ in a neighborhood of which we define the mappings j'_k (we prove this in §3). In particular, this explains why M' is holomorphically degenerate at one point if and only if it is holomorphically degenerate at every point ([BR4]). On the contrary, the direct definition of $\kappa'_{M'}$ in terms of locally defined tangent holomorphic vector fields provided in [BR4], [BER2] makes this point less transparent, even if the two definitions are equivalent. So, we believe that the definitionof $\kappa'_{M'}$ in terms of j'_k is more adequate. Furthermore, to be even more concrete, let us add that the behavior of the map (1.11) depends mostly upon the infinite collection of holomorphic mappings $(\overline{\Theta}'_\beta(\tau'))_{\beta \in \mathbb{N}^{n-1}}$, since we essentially get rid of z' by differentiating $w' - \sum_{\beta \in \mathbb{N}^{n-1}} (z')^\beta \, \overline{\Theta}'_\beta(\tau')$ with respect to z' in (1.11). Equivalently, after conjugating, we may consider instead the simpler holomorphic mappings $\mathscr{Q}'_k : t' \ni \mathbb{C}^n \mapsto (\Theta'_\beta(t'))_{|\beta| \leq k} \in \mathbb{C}^{\frac{(n-1+k)!}{(n-1)!\,k!}}$. Then the generic rank of $\mathscr{Q}'_k$ is equal to the same integer $\chi'_{M'}$, for all k large enough. This again supports the thesis that the components $\Theta'_\beta(t')$ occuring in the defining function of (M', p') and in the reflection function are over all important. In §3 below, some more explanations about the mappings $\mathscr{Q}'_k$ are provided.

Let $\chi'_{M'}$ be as above and let Δ be the unit disc in $\mathbb{C}$. It is known that there exists a proper real analytic subset $E'_{M'}$ of M' such that for each point $q' \in M' \backslash E'_{M'}$, there exists a neighborhood of q' in $\mathbb{C}^n$ in which (M', q') is biholomorphically equivalent to a product $\underline{M}'_{q'} \times \Delta^{n - \chi'_{M'}}$ of a small real analytic hypersurface $\underline{M}'_{q'}$ contained in the smaller complex space $\mathbb{C}^{\chi'_{M'}}$ by a $(n - \chi'_{M'})$-dimensional polydisc. As expected of course, the hypersurface $\underline{M}'_{q'}$ is a *holomorphically nondegenerate* hypersurface (Lemma 3.54), namely $\kappa'_{\underline{M}'_{q'}} = 0$. Now, granted Theorem 1.9, we observe that the local graph $\{(t, h(t)) : t \in (M, p)\}$ of h is clearly contained in the following

local complex analytic set passing through $p \times p'$:

$$\mathscr{C}'_h := \{(t, t') \in \mathbb{C}^n \times \mathbb{C}^n : \Theta'_\beta(t') = \theta'_\beta(t),\ \forall\, \beta \in \mathbb{N}^{n-1}\}. \tag{1.12}$$

It follows from the considerations of §3 below that the various local complex analytic sets $\mathscr{C}'_h$ centered at points $(p, h(p))$ stick together in a well defined complex analytic set, independent of coordinates. Furthermore, since the generic rank of $\mathscr{Q}'_\infty$ is equal to $\chi'_{M'}$, there exists a well defined irreducible component $\mathscr{C}''_h$ of $\mathscr{C}'_h$ of dimension $(2n - \chi'_{M'})$ containing the local graph of h. We deduce:

Corollary 1.13. *Let $(n - \chi'_{M'})$ be the holomorphic degeneracy degree of M'. Then there exists a semi-global closed complex analytic subset $\mathscr{C}''_h$ defined in a neighborhood of the graph of h in $\mathbb{C}^n \times \mathbb{C}^n$ which is of dimension $(2n - \chi'_{M'})$ and which contains the graph of h over M. In particular, h extends as a complex analytic set to a neighborhood of M if $\chi'_{M'} = n$, i.e. if M' is holomorphically nondegenerate.*

Of course, the most interesting case of Corollary 1.13 is when $\chi'_{M'} = n$. Extendability of h as an analytic set can be improved. Using the approximation theorem of Artin ([Ar]) we shall deduce the following expected result (*see* Lemma 4.14), which is identical with Theorem 1.2:

Theorem 1.14. *Let $h : M \to M'$ be a $\mathscr{C}^\infty$-smooth CR diffeomorphism between two connected globally minimal real analytic hypersurfaces in $\mathbb{C}^n$. If M' is holomorphically nondegenerate, then h is real analytic at every point of M.*

Of course, real analyticity of h is equivalent to its holomorphic extendability to a neighborhood of M in $\mathbb{C}^n$, by a classical theorem due to Severi and generalized to higher codimension by Tomassini. In particular, Theorem 1.14 entails that a pair of globally minimal holomorphically nondegenerate real analytic hypersurfaces in $\mathbb{C}^n$ are $\mathscr{C}^\infty$-smoothly CR equivalent *if and only if* they are biholomorphically equivalent.

1.15. Necessity. Since 1995-6 (*see* [BR4], [BHR]), it was known that Theorem 1.14 above might provide an expected *necessary and sufficient condition* for h be analytic (provided of course that the local CR-envelope of holomorphy of M, which already contains one side D_p of M at p, does not contain the other side). Indeed, considering self-mappings of M', we have:

Lemma 1.16. ([BHR]) *Conversely, if (M', p') is holomorphically* degenerate *and if there exists a $\mathscr{C}^\infty$-smooth CR function defined in a neighborhood of $p' \in M'$ which does* not *extend holomorphically to a neighborhood of p', then there exists a $\mathscr{C}^\infty$-smooth CR-automorphism of (M', p') fixing p' which is* not *real analytic at p'.*

1.17. Organization of the paper. To be brief, in §2 we present first a thorough intuitive description (in words) of our strategy for the proof of Theorems 1.2 and 1.9. This presentation is really important, since it helps to understand the general point of view without entering excessively technical considerations. Then §3, §4, §5, §6, §7 and §8 are devoted to complete all the proofs. We would like to mention that in the last §9, we provide a proof of the following assertion, which might be interesting in itself, because it holds without any rank assumption on h. We refer the reader to the beginning of §9 for comments, generalizations and applications.

Theorem 1.18. *Let $h : M \to M'$ be a $\mathscr{C}^\infty$-smooth CR mapping between two connected real analytic hypersurfaces in $\mathbb{C}^n$ $(n \geq 2)$. If M and M' do not contain any complex curve, then h is real analytic at* every *point of M.*

1.19. Acknowledgement. The author is very grateful to Egmont Porten, who pointed out to him the interest of gluing half-discs to the Levi flat hypersurfaces Σ_γ below. Also, the author wishes to thank Hervé Gaussier and the referee for clever and helpful suggestions concerning this paper.

§2. Description of the proof of Theorem 1.2

2.1. Continuity principle and reflection principle. According to the extendability theorem proved in [R], [BT2] and generalized to only $\mathscr{C}^2$-smooth hypersurfaces by Trépreau [Tr1], for every point $p \in M$, the mapping h in Theorems 1.9 and 1.14 already extends holomorphically to a one-sided neighborhood D_p of M at p in $\mathbb{C}^n$. This extension is performed by using small Bishop discs attached to M and by applying the approximation theorem proved in [BT1]. These D_p may be glued to yield a domain D attached to M which contains at least one side of M at every point. In this concern, we would like to remind the reader of the well known and somewhat "paradoxical" phenomenon of *automatic holomorphic extension of CR functions on M to both sides*, which can render the above Theorem 1.9 surprisingly trivial. Indeed, let U_M denote the (open) set of points q in M such that the envelope of holomorphy of D contains a neighborhood of q in $\mathbb{C}^n$ (as is well known, if, for instance, the Levi form of M has one positive and one negative eigenvalue at q, then $q \in U_M$; more generally, the *local envelope of holomorphy* of M or of the one-sided neighborhood D of M at an arbitrary point $q \in M$ is always *one-sheeted*, as can be established using the approximation theorem proved in [BT1]). Then clearly, the n components $h_1, \ldots, h_n$ of our CR diffeomorphism extend holomorphically to a neighborhood of U_M in $\mathbb{C}^n$, as does any arbitrary CR function on M. But it remains to extend h holomorphically across $M \backslash U_M$ and the techniques of the reflection principle are then unavoidable. *Here lies the "paradox"*: sometimes the envelope of holomorphy trivializes the problem, sometimes near some pseudoconvex points of finite D'Angelo type (but not all) it helps to control the behavior of the mapping thanks to local peak functions, sometimes it does not help at all, especially at every point of

the "border" between the pseudoconvex and the pseudoconcave parts of M. In the interesting articles [DF2,3], Diederich-Fornæss succeeded in constructing the local envelope of holomorphy at many points of a real analytic non-pseudoconvex bounded boundary in $\mathbb{C}^2$ for which the border consists of a compact maximally real submanifold and they deduced that any biholomorphic mapping between two such domains extends continuously up to the boundary as a CR homeomorphism. In general, it is desirable to describe constructively the local envelope of holomorphy at every point of the border of M. However, this general problem seems to be out of the reach of the presently known techniques of study of envelopes of holomorphy by means of analytic discs. Fortunately, in the study of the smooth reflection principle, the classical techniques usually do not make any difference between the two sets U_M and $M\backslash U_M$ and these techniques provide a *uniform method* of extending h across M, no matter the reference point p belongs to U_M or to $M\backslash U_M$ (*see* [L], [P3,4], [W1], [W2], [DW], [W3], [BJT], [BR1], [BR2], [DF2], [Su1], [Su2], [SS], [BHR], [BER1], [BER2], [CPS1], [CPS2]). Such a uniform method seems to be quite satisfactory. On the other hand, the recent far reaching works of Diederich-Pinchuk in the study of the *geometric reflection principle* show up an accurate analysis of the relative pseudo-convex(-concave) loci of M. Such an analysis originated in the works of Diederich-Fornæss [DF2,3] and in the work of Diederich-Fornæss-Ye [DFY]. In [P4], [DP1,2], [Hu], [Sha], the authors achieve the propagation of holomorphic extension of a "germ" along the Segre varieties of M (or the Segre sets), taking into account their relative position with respect to M and its local convexity. In such reasonings, various discussions concerning envelopes of holomorphy come down naturally in the proofs (which involve many sub-cases). However, comparing these two trends of thought, it seems to remain still really paradoxical that both phenomena contribute to the reflection principle, without an appropriate understanding of the general links between these two techniques. Guided by this observation, we have devised a new two-sided technique. In this article, we shall indeed perform the proof of Theorem 1.9 by *combining the technique of the reflection principle together with the consideration of envelopes of holomorphy*. Further, we have been guided by a deep analogy between the various reflection principles and the results on *propagation of analyticity for CR functions along CR curves*, in the spirit of the Russian school in the sixties, of Treves' school, in the spirit of the works of Trépreau, of Tumanov, of Jöricke, of Porten and others: the vector fields of the complex tangent bundle T^cM being the *directions* of propagation for the one-sided holomorphic extension of CR functions, and the Segre varieties giving these directions (because $T^c_qM = T_qS_{\bar{q}}$ for all $q \in M$), one can expect that Segre varieties *also propagate the analyticity of CR mappings*. Of course, such a propagation property is already well known and intensively studied since the historical works of Pinchuk [P1,2,3,4] and since the important more recent articles of Diederich-Fornæss-Ye [DFY] and of Diederich-Pinchuk

[DP1,2]. However, in the classical works, one propagates along a single Segre variety $S_{\bar{p}}$ and perhaps afterwards along the subsequent "Segre sets" if necessary ([BER1,2], [Me4,5,6,7,8], [Mi3,4]). But in the present article we will propagate the analytic properties along a *bundle* of Segre varieties of M, namely *along a Levi-flat union of Segre varieties* $\Sigma_\gamma := \cup_{q\in\gamma} S_{\bar{q}}$, parametrized by a smooth curve γ transversal to T^cM, in total analogy with the propagation of analyticity of CR functions, where one uses a *bundle of attached analytic discs*, parametrized by a curve transversal to T^cM (*cf.* Tumanov's version of propagation [Tu2]; in this concern, we would like to mention that recently, Porten [Po] has discovered a simple strategy of proof using only CR orbits, deformations of bundles of analytic discs and Levi forms on manifolds with boundary which treats in an unified way the local ([Tu1]) and the global ([Tr2], [Tu2], [Me1], [J]) wedge extension theorem). Let us now explain our strategy in full details and describe our proof. To avoid excessive technicalities in this presentation, we shall discuss the proof of Theorem 1.2 instead of Theorem 1.9.

2.2. Description of the proof of Theorem 1.2. To begin with, recall from §1 that the generic rank of the locally defined holomorphic mapping $\mathscr{Q}'_\infty : t' \mapsto (\Theta'_\beta(t'))_{\beta\in\mathbb{N}^{n-1}}$ is equal to the integer $\chi'_{M'}$. The generic rank of an infinite collection of holomorphic functions can always be interpreted in terms of finite subcollections $\mathscr{Q}'_k(t') = (\Theta'_\beta(t'))_{|\beta|\leq k}$. Of course, using the CR diffeomorphism assumption, we may prove carefully that $\chi_M = \chi'_{M'}$ (*see* Lemma 4.3). It is known that M' is holomorphically nondegenerate if and only if $\chi'_{M'} = n$. In the remainder of §2, we shall assume that M' is holomorphically nondegenerate. Let $q' \in M'$ be a point where the rank of $\mathscr{Q}'_k(t')$ is equal to n, hence locally constant. In our first step, we will show that h is real analytic at the reciprocal image of each such point $h^{-1}(q') \in M$. In fact, these points q' are the *finitely nondegenerate* points of M', in the sense of [BER2, §11.2]. In this case, it will appear that our proof of the first step is a reminiscence of the Lewy-Pinchuk reflection principle and in fact, it is a mild easy generalization of it, just by differentiating more than one time. Afterwards, during the second (crucial and much more delicate) step, to which §5–8 below are devoted, we shall extend h at each point $h^{-1}(q')$, where q' belongs to the real analytic subset $E'_{M'} \subset M'$ where the mapping $\mathscr{Q}'_\infty$ is not of rank n. This is where we use envelopes of holomorphy. We shall start as follows. By §3.47, there exists a proper real analytic subset $E'_{M'}$ of M' such that the rank of the mapping $\mathscr{Q}'_\infty$ localized around points $p' \in M'$ equals n at each point q' close to p' not belonging to $E'_{M'}$. Let $E'_{\text{na}} \subset E'_{M'} \subset M'$ ("na" for "non-analytic") denote the closed set of points $q' \in M'$ such that h is *not* real analytic in a neighborhood of $h^{-1}(q')$. By the first step, E'_{na} is necessarily contained in $E'_{M'}$. If $E'_{\text{na}} = \emptyset$, Theorem 1.9 would be proved, gratuitously. We shall therefore assume that $E'_{\text{na}} \neq \emptyset$ and we shall endeavour to derive a contradiction in several nontrivial steps as follows. Assuming that E'_{na} is nonempty, in order to come to an absurd,

it suffices to exhibit at least one point p' of $E'_{\rm na}$ such that h is in fact real analytic in a neighborhood of $h^{-1}(p')$. This is what we shall achieve and the proof is long. In analogy with what is done in [MP1,2], we shall first show that we can choose a particular point $p'_1 \in E'_{\rm na}$ which is nicely disposed as follows (*see* FIGURE 1).

Lemma 2.3. (*cf.* [MP1, Lemma 2.3]) *Let $E' \subset M'$ be an arbitrary closed subset of an everyhere locally minimal real analytic hypersurface $M' \subset \mathbb{C}^n$, with $n \geq 2$. If E' and $M' \backslash E'$ are nonempty, then there exists a point $p'_1 \in E'$ and a real analytic one-codimensional submanifold M'_1 of M' with $p'_1 \in M'_1 \subset M'$ which is* generic *in $\mathbb{C}^n$ and which divides M' near p'_1 in two open parts M'^-_1 and M'^+_1 such that $E' \backslash \{p'_1\}$ is contained in the open side M'^+_1 near p'_1.*

To reach the desired contradiction, it will suffice to prove that h is analytic at the point $h^{-1}(p'_1)$, where $p'_1 \in E'_{\rm na} \cap M'_1$ is such a special point as in Lemma 2.3 above. To this aim, we shall pick a long embedded real analytic arc γ' contained in M'^-_1 transverse to the complex tangential directions of M', with the "center" q'_1 of γ' very close to p'_1 (*see* FIGURE 1). Next, using the inverse mapping h^{-1}, we can copy back these objects on M, namely we set $E_{\rm na} := h^{-1}(E'_{\rm na})$, $\gamma := h^{-1}(\gamma')$, $p_1 := h^{-1}(p'_1)$, $q_1 := h^{-1}(q'_1)$, whence $M_1 := h^{-1}(M'_1)$, $M^-_1 = h^{-1}(M'^-_1)$ and $M^+_1 = h^{-1}(M'^+_1)$.

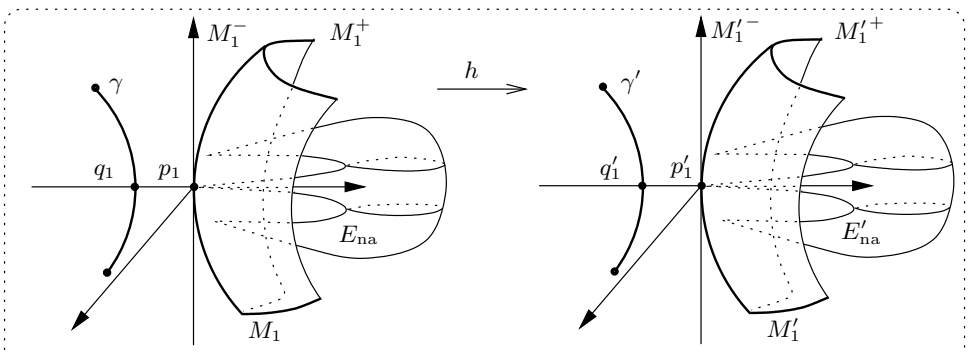

FIGURE 1: GEOMETRIC SIMILARITY THROUGH THE CR DIFFEOMORPHISM h

To the analytic arc γ', we shall associate holomorphic coordinates $t' = (z', w') \in \mathbb{C}^{n-1} \times \mathbb{C}$, $w' = u' + iv'$, such that $p'_1 = 0$ and γ' is the u'-axis (in particular, some "normal" coordinates in the sense of [BJT] would be appropriate, but not indispensable) and we shall consider the reflection function $\mathscr{R}'_h(t, \bar{\nu}') = \bar{\mu}' - \sum_{\beta \in \mathbb{N}^{n-1}} \bar{\lambda}'^{\beta}\, \Theta'_\beta(h(t))$ *in these coordinates* (z', w'). The functions $\Theta'_\beta(h(t))$ will be called the *components of the reflection function* $\mathscr{R}'_h$. Next, we choose coordinates $t \in \mathbb{C}^n$ near (M, p_1) vanishing at p_1. To the $\mathscr{C}^\infty$-smooth arc γ, we shall associate the following $\mathscr{C}^\infty$-smooth Levi-flat hypersurface: $\Sigma_\gamma := \bigcup_{q \in \gamma} S_{\bar{q}}$, where $S_{\bar{q}}$ denotes the Segre variety of M associated to various points $q \in M$ (*see* FIGURE 2). Let

$\Delta_n(0,\rho) := \{t \in \mathbb{C}^n : |t| < \rho\}$ be the polydisc with center 0 of polyradius $(\rho,\ldots,\rho)$, where $\rho > 0$. Using the tangential Cauchy-Riemann operators to differentiate the fundamental identity which reflects the assumption $h(M) \subset M'$, we shall establish the following crucial observation.

Lemma 2.4. *There exists a positive real number $\rho > 0$ independent of γ' such that all the components $\Theta'_\beta(h(t))$ of the reflection function extend as CR functions of class $\mathscr{C}^\infty$ over $\Sigma_\gamma \cap \Delta_n(0,\rho)$.*

Furthermore, by global minimality of M, there exists a global one-sided neighborhood D of M to which all CR functions (hence the components of h) extend holomorphically (*see* the details in §3.6). We now recall that, by construction of M'_1, the CR mapping h is already holomorphic in a small neighborhood of $h^{-1}(q')$ for every point $q' \in M_1'^{-}$. It follows that the components $\Theta'_\beta(h(t))$ of the reflection function are already holomorphic in a fixed neighborhood, say Ω, of M_1^- in $\mathbb{C}^n$. Also, they are already holomorphic at each point of the global one-sided neighborhood D. In particular, they are holomorphic in a neighborhood $\omega_\gamma \subset \Omega$ in $\mathbb{C}^n$ of $\gamma \subset M_1^-$. Then according to the Hanges-Treves extension theorem [HaTr], we deduce that all the components $\Theta'_\beta(h(t))$ of the reflection function extend holomorphically to a neighborhood $\omega(\Sigma_\gamma)$ of Σ_γ in $\mathbb{C}^n$, which is a (very thin) neighborhood whose size depends of course on the size of ω_γ (and the size of ω_γ goes to zero without any explicit control as the center point q_1 of γ tends towards $p_1 \in E_{\text{na}}$).

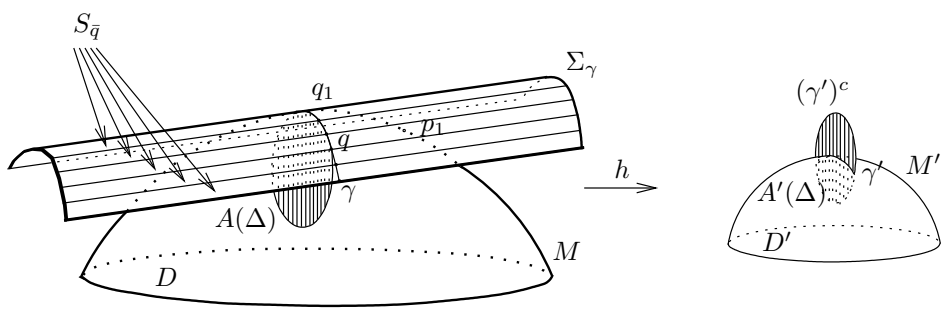

FIGURE 2: THE DOMAIN AND ITS HEAD COVERED BY A LEVI-FLAT HAT

To achieve the final step, we shall consider the envelope of holomorphy of $D \cup \Omega \cup \omega(\Sigma_\gamma)$ (in fact, to prevent from poly-dromy phenomena, we shall instead consider a certain subdomain of $D \cup \Omega \cup \omega(\Sigma_\gamma)$, see the details in §6 below), which is a kind of round domain $D \cup \Omega$ covered by a thin Levi-flat almost horizontal "hat-domain" $\omega(\Sigma_\gamma)$ touching the "top of the head" M along the one-dimensional arc γ (*see* FIGURE 3).

Our purpose will be to show that, if the arc γ' is sufficiently close to M'_1 (whence γ is also very close to M_1), then the envelope of holomorphy of

$D \cup \Omega \cup \omega(\Sigma_\gamma)$ contains the point p_1, *even if* $\omega(\Sigma_\gamma)$ *is arbitrarily thin*. We will therefore deduce that all the components of the reflection function extend holomorphically at p_1, thereby deriving the desired contradiction. By exhibiting a special curved Hartogs domain, we shall in fact prove that holomorphic functions in $D \cup \Omega \cup \omega(\Sigma_\gamma)$ extend holomorphically to the lower one sided neighborhood Σ_γ^- (the "same" side as $D = M^-$, *see* FIGURE 3); we explain below why this analysis gives analyticity at p_1, even in the (in fact simpler) case where p_1 belongs to the other side Σ_γ^+.

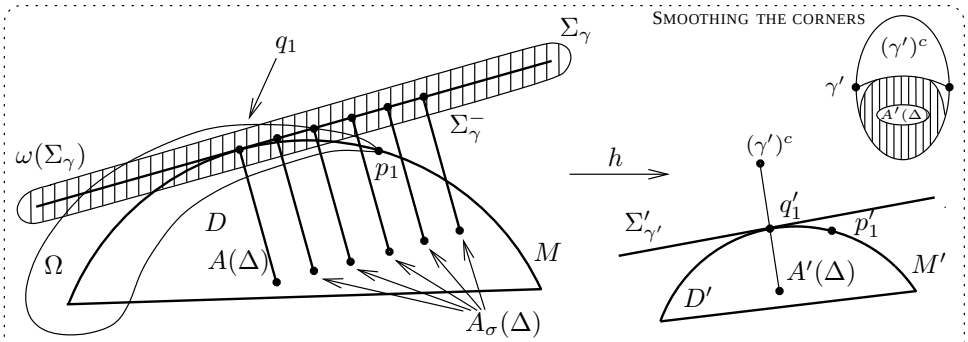

FIGURE 3: ENVELOPE OF HOLOMORPHY OF THE DOMAIN AND ITS LEVI-FLAT HAT

Notice that, because the order of contact between Σ_γ and M is at least equal to two (because $T_qM = T_q\Sigma_\gamma$ for every point $q \in \gamma$), we cannot apply directly any version of the edge of the wedge theorem to this situation. Another possibility (which, on the contrary, might well succeed) would be to apply repeatedly the Hanges-Treves theorem, in the disc version given in [Tu2] (*see* also [MP1]) to deduce that holomorphic functions in $D \cup \Omega \cup \omega(\Sigma_\gamma)$ extend holomorphically to the lower side Σ_γ^-, just by sinking progressively Σ_γ into D. But this would require a too complicated analysis for the desired statement. Instead, by performing what seems to be the simplest strategy, we shall use some deformations ("translations") of the following half analytic disc attached to Σ_γ along γ. We shall consider the inverse image by h of the half-disc $(\gamma')^c \cap D'$ obtained by complexifying γ' (*see* FIGURE 2 and FIGURE 3). Rounding off the corners and reparametrizing the disc, we get an analytic disc $A \in \mathscr{O}(\Delta) \cap \mathscr{C}^\infty(\overline{\Delta})$ with $A(b^+\Delta) \subset \gamma \subset \Sigma_\gamma$, where $b^+\Delta := b\Delta \cap \{\mathrm{Re}\,\zeta \geq 0\}$, $b\Delta = \{|z| = 1\}$ and $A(1) = q_1$. It is this half-attached disc that we shall "translate" along the complex tangential directions to Σ_γ as follows.

Lemma 2.5. *There exists a* $\mathscr{C}^\infty$*-smooth* $(2n-2)$*-parameter family of analytic discs* $A_\sigma : \Delta \to \mathbb{C}^n$, $\sigma \in \mathbb{R}^{2n-2}$, $|\sigma| < \varepsilon$, *satisfying*

- **(1)** *The disc* $A_\sigma|_{\sigma=0}$ *coincides with the above disc* A.
- **(2)** *The discs* A_σ *are half-attached to* Σ_γ, *namely* $A_\sigma(b^+\Delta) \subset \Sigma_\gamma$.
- **(3)** *The boundaries* $A_\sigma(b\Delta)$ *of the discs* A_σ *are contained in* $D \cup \Omega \cup \omega(\Sigma_\gamma)$.

(4) *The mapping* $(\zeta, \sigma) \mapsto A_\sigma(\zeta) \in \Sigma_\gamma$ *is a* $\mathscr{C}^\infty$*-smooth diffeomorphism from a neighborhood of* $(1, 0) \in b\Delta \times \mathbb{R}^{2n-2}$ *onto a neighborhood of* q_1 *in* Σ_γ.

(5) *As* $\gamma = h^{-1}(\gamma')$ *varies and as* q_1 *tends to* p_1*, these discs depend* $\mathscr{C}^\infty$*-smoothly upon* γ' *and properties* **(1-4)** *are stable under perturbations of* γ'.

(6) *If* $\gamma(0) = q_1$ *is sufficiently close to* M_1*, and if* $p_1 \in \Sigma_\gamma^-$ *is under* Σ_γ *(as in* FIGURE 3*), then the envelope of holomorphy of (an appropriate subdomain of)* $D \cup \Omega \cup \omega(\Sigma_\gamma)$ *contains* p_1.

Consequently, using these properties **(1-6)** and applying the continuity principle to the family A_σ, we shall obtain that the envelope of holomorphy of $D \cup \Omega \cup \omega(\Sigma_\gamma)$ (in fact of a good subdomain of it, in order to assure monodromy) contains a large part of the side Σ_γ^- of Σ_γ in which $D(=: M^-)$ lies. In the case where p_1 lies in this side Σ_γ^-, and provided that the center point q_1 of γ is sufficiently close to p_1, we are done: the components of the reflection function extend holomorphically at p_1 (this case is drawn in FIGURE 3). Of course, it can happen that p_1 lies in the other side Σ_γ^+ or in Σ_γ itself. In fact, the following tri-chotomy is in order to treat the problem. To apply Lemma 2.5 correctly, and to complete the study of our situation, we shall indeed distinguish three cases.

Case I. The Segre variety $S_{\bar{p}_1}$ cuts M_1^- along an infinite sequence of points $(q_k)_{k\in\mathbb{N}}$ tending towards p_1.

Case II. The Segre variety $S_{\bar{p}_1}$ does not intersect M_1^- in a neighborhood of p_1 and it goes under M_1^-, namely inside D.

Case III. The Segre variety $S_{\bar{p}_1}$ does not intersect M_1^- in a neighborhood of p_1 and it goes over M_1^-, namely over $D \cup M_1^-$.

In the first case, choosing the point q_1 above to be one of the points q_k which is sufficiently close to p_1, and using the fact that p_1 *belongs to* $S_{\bar{q}_1}$ (because $q_1 \in S_{\bar{p}_1}$), we have in this case $p_1 \in \Sigma_\gamma$ and the holomorphic extension to a neighborhood $\omega(\Sigma_\gamma)$ already yields analyticity at p_1 (in this case, we have nevertheless to use Lemma 2.5 to insure monodromy of the extension). In the second case, we have $S_{\bar{p}_1} \cap D \neq \emptyset$. We then choose the center point q_1 of γ very close to p_1. Because we have in this case a uniform control of the size of $\omega(\Sigma_\gamma)$, we again get that p_1 always belongs to $\omega(\Sigma_\gamma)$ and Lemma 2.5 is again used to insure monodromy. In the third (a priori more delicate) case, by a simple calculation, we shall observe that p_1 always belong to the lower side Σ_γ^- (as in FIGURE 3) and Lemma 2.5 applies to yield holomorphic extension and monodromy of the extension. In sum, we are done in all the three cases: we have shown that the components $\Theta'_\beta(h(t))$ all extend holomorphically at p_1. Finally, using a complex analytic set similar to $\mathscr{C}'_h$ defined in (1.12) and Lemma 4.14 below, we deduce that h is real analytic at p_1.

In conclusion to this presentation, we would like to say that some unavoidable technicalities that we have not mentioned here will render the

proof a little bit more complicated (especially about the choice of q_1 sufficiently close to p_1, about the choice of γ and about the smooth dependence with respect to γ of Σ_γ and of A_σ). The remainder of the paper is devoted to complete these technical features thoroughly. At first, we provide some necessary background material about the reflection function.

§3. Biholomorphic invariance of the reflection function

3.1. Preliminary and notation. Let $p' \in M'$, let $t' = (z'_1, \dots, z'_{n-1}, w') = (z', w')$ be holomorphic coordinates vanishing at p' such that the projection $T^c_{p'}M' \to \mathbb{C}^{n-1}_{z'}$ is submersive. As in §1, we can represent M' by a complex analytic defining equation of the form $\bar{w}' = \Theta'(\bar{z}', t')$, where the right hand side function converges normally in the polydisc $\Delta_{2n-1}(0, \rho')$ for some $\rho' > 0$. Here, by normal convergence we mean precisely that there exists a constant $C > 0$ such that if we develope $\Theta'(\bar{z}', t') = \sum_{\beta \in \mathbb{N}^{n-1}} \sum_{\alpha \in \mathbb{N}^n} (\bar{z}')^\beta (t')^\alpha \, \Theta'_{\beta,\alpha}$, with $\Theta'_{\beta,\alpha} \in \mathbb{C}$, then we have

$$|\Theta'_{\beta,\alpha}| \leq C \, (\rho')^{-|\alpha|-|\beta|}, \tag{3.2}$$

for all multi-indices α and β. Furthermore, by the reality of M' the function Θ' satisfies the power series identity $\Theta'(\bar{z}', z', \overline{\Theta}'(z', \bar{z}', \bar{w}')) \equiv \bar{w}'$. It follows from this identity that $\Theta'_0(t')$ does not vanish identically, and in fact contains the monomial $w' \equiv \Theta'_0(0, w')$. We set $p := h^{-1}(p')$ and similarly, we represent a local defining equation of M near p as $\bar{w} = \Theta(\bar{z}, t)$, where Θ converges normally in $\Delta_{2n-1}(0, \rho)$ for some $\rho > 0$. We denote the mapping by $h := (f, g) := (f_1, \dots, f_{n-1}, g)$. Then the assumption that h maps M into M' yields that

$$\overline{g(t)} = \Theta'(\overline{f(t)}, h(t)), \tag{3.3}$$

for all $t \in M$ near p. For this relation to hold locally, it is convenient to assume that $|h(t)| < \rho'$ for every $t \in M$ with $|t| < \rho$.

Since by assumption the h_j are of class $\mathscr{C}^\infty$ and CR over M, we can extend them to a neighborhood of M in $\mathbb{C}^n$ as functions $\widetilde{h}_j$ of class $\mathscr{C}^\infty$ with antiholomorphic derivatives $\partial_{\bar{t}_l} \widetilde{h}_j$ vanishing to infinite order on M, $l = 1, \dots, n$. So, if we develope these extensions in real Taylor series at each point $q \in M$ as follows:

$$T^\infty_q \widetilde{h}_j = \widetilde{h}_j(q) + \sum_{\alpha \in \mathbb{N}^n \setminus \{0\}} \partial^\alpha_t \widetilde{h}_j(q) \, (t - q)^\alpha / \alpha \, ! \; \in \; \mathbb{C}[\![t]\!], \tag{3.4}$$

there are no antiholomorphic term.

The reflection function associated with such a coordinate system and with such a defining equation, namely

$$\mathscr{R}'_h(t, \bar{\nu}') := \bar{\mu}' - \sum_{\beta \in \mathbb{N}^{n-1}} (\bar{\lambda}')^\beta \, \Theta'_\beta(h(t)), \tag{3.5}$$

where $\bar{\nu}' = (\bar{\lambda}', \bar{\mu}')$, converges normally with respect to $t \in M$ with $|t| < \rho$ and $\bar{\nu}' \in \mathbb{C}^n$ with $|\bar{\nu}'| < \rho'$, hence defines a function which is CR of class

$\mathscr{C}^\infty$ on M near p and holomorphic with respect to $\bar{\nu}'$. The main goal of this paragraph is to study its invariance with respect to changes of coordinates.

3.6. Holomorphic extension to a one-sided neighborhood attached to M. Before treating invariance, recall that thanks to the local minimality at every point, all CR functions on M and in particular the h_j extend holomorphically to one side of M at every point of M (the simplest proof of this result can be found in [R]; *see* also the excellent survey [Tr3] for a proof using Bishop discs). Of course, the side may vary. We do not require that M be orientable, but anyway the small pieces (M, p) always divide locally $\mathbb{C}^n$ in two components $(M, p)^\pm$. By shrinking these one-sided neighborhoods covered by attached analytic discs, we may assume that for every point $p \in M$, all CR functions on M extend holomorphically to the intersection of a small nonempty open ball B_p centered at p with one of the two local open components $(M, p)^\pm$. Let D_p denote the resulting open side of M at p, namely $D_p = B_p \cap (M, p)^+$ or $D_p = B_p \cap (M, p)^-$. Since the union of the various open sets D_p does not necessarily make a domain, we introduce the following definition. By a *global one-sided neighborhood* of M in $\mathbb{C}^n$, we mean a *domain* D such that for every point $p \in M$, D contains a local one-sided neighborhood of M at p. In particular, D necessarily contains a neighborhood of a point $q \in M$ if it contains the two local sides of M at q. To construct a global one-sided neighborhood to which all $\mathscr{C}^\infty$-smooth and even $\mathscr{C}^0$-smooth CR functions on M extend holomorphically, it suffices to set

$$D := \bigcup_{q \in M} D_q \bigcup_{D_p \cap D_q = \emptyset} \left(B_p \cap \overline{D_p} \cap \overline{D_q} \cap B_q \right). \tag{3.7}$$

The second part of this union consists of an open subset of M which connects every meeting pair of local one-sided neighborhoods in the case where their respective sides differ. If the radii of the B_p are sufficiently small compared to the geometric distortion of M, then the open set defined by (3.6) is a domain in $\mathbb{C}^n$. Moreover, using the uniqueness principle for CR functions, it is elementary to see that every CR function ϕ on M extends as a unique holomorphic function globally defined over D. In this concern, we would like to mention that a more general construction in arbitrary codimension in terms of attached wedges is provided in [Me2], [MP1,2] and in [Da2].

Since each D_p is contained in some union of small Bishop discs with boundaries contained in (M, p), it follows that the maximum modulus of the holomorphic extension of ϕ to D_p is less than or equal to the maximum modulus of the CR function ϕ over the piece (M, p), which is a little bit larger than $\overline{D_p} \cap M$. To be precise, after shrinking B_p if necessary, we can assume that the Bishop discs covering D_p have their boundaries attached to $M \cap \{|t| < \rho\}$. Since $|h(t)| < \rho'$ for $t \in M$ with $|t| < \rho$, the same majoration holds for $t \in D_p$ (maximum principle), so it follows that the series defined by (3.5) also converges normally with respect to t inside D_p. In conclusion, we have established the following.

Lemma 3.8. *With the above notation, $\mathscr{R}'_h$ is defined in the set*

$$[D_p \cup (M \cap \Delta_n(0,\rho))] \times \Delta_n(0,\rho') \ \subset \ \Delta_n(0,\rho) \times \Delta_n(0,\rho'). \tag{3.9}$$

Precisely, $\mathscr{R}'_h$ is holomorphic with respect to $(t, \bar{\nu}')$ in $D_p \times \Delta_n(0,\rho')$ and it is CR of class $\mathscr{C}^\infty$ over the real analytic hypersurface

$$[M \cap \Delta_n(0,\rho)] \times \Delta_n(0,\rho') \ \subset \ \Delta_n(0,\rho) \times \Delta_n(0,\rho'). \tag{3.10}$$

3.11. Characterization of the holomorphic extendability of $\mathscr{R}'_h$. Let $x \in \mathbb{C}^m$, $x' \in \mathbb{C}^{m'}$ and consider a power series of the form

$$R(x,x') := \sum_{\alpha \in \mathbb{N}^m, \alpha' \in \mathbb{N}^{m'}} R_{\alpha,\alpha'} \, x^\alpha \, (x')^{\alpha'}, \tag{3.12}$$

where the $R_{\alpha,\alpha'}$ are complex coefficients. Let us assume that R converges normally in some polydisc $\Delta_m(0,\sigma) \times \Delta_{m'}(0,\sigma')$, for some two $\sigma, \sigma' > 0$. By normal convergence, we mean that there exists a constant $C > 0$ such that the Cauchy inequalities $|R_{\alpha,\alpha'}| \leq C \, (\sigma)^{-|\alpha|} \, (\sigma')^{-|\alpha'|}$ hold. Let us define $R_{\alpha'}(x) := \sum_{\alpha \in \mathbb{N}^m} R_{\alpha,\alpha'} \, x^\alpha = \left[\frac{1}{\alpha'!} \, \partial^{\alpha'}_{x'} R(x,x')\right]_{x':=0}$. Classically in the basic theory of converging power series, it follows that for every positive $\widetilde{\sigma} < \sigma$, there exists a constant $C_{\widetilde{\sigma}}$ which depends on $\widetilde{\sigma}$ such that for all x satisfying $|x| < \widetilde{\sigma}$, the estimate $|R_{\alpha'}(x)| \leq C_{\widetilde{\sigma}} \, (\sigma')^{-|\alpha'|}$ holds. Indeed, we simply compute for $|x| < \widetilde{\sigma}$ the elementary series:

(3.13)
$$\begin{cases} |R_{\alpha'}(x)| \leq \displaystyle\sum_{\alpha \in \mathbb{N}^m} |R_{\alpha,\alpha'}| \, |x|^\alpha \leq \\ \qquad\qquad \leq C \displaystyle\sum_{\alpha \in \mathbb{N}^m} \sigma^{-|\alpha|} \, (\sigma')^{-|\alpha'|} \, \widetilde{\sigma}^{|\alpha|} = C \left(\dfrac{\sigma}{\sigma - \widetilde{\sigma}}\right)^m \, (\sigma')^{-|\alpha'|}. \end{cases}$$

As an application, such an inequality applies to the defining function of M': for every positive $\widetilde{\rho'} < \rho'$, there exists a constant $C_{\widetilde{\rho'}}$ such that for all $|t'| < \widetilde{\rho'}$ we have

$$|\Theta'_\beta(t')| \leq C_{\widetilde{\rho'}} \, (\rho')^{-|\beta|}. \tag{3.14}$$

The estimation (3.13) also exhibits an interesting basic property. Suppose for a while that the reflection function $\mathscr{R}'_h$ defined by (3.5) extends holomorphically to the polydisc $\Delta_n(0,\sigma) \times \Delta_n(0,\sigma')$ for some positive $\sigma, \sigma' > 0$ with $\sigma < \rho$ and $\sigma' < \rho'$. Then the functions $\theta'_\beta(t)$ defined by

$$\theta'_\beta(t) := \left[\frac{1}{\beta!} \, \partial^\beta_{\bar{\lambda}'} \mathscr{R}'_h(t, \bar{\nu}')\right]_{\bar{\lambda}':=0} \tag{3.15}$$

satisfy a Cauchy estimate, namely $|\theta'_\beta(t)| \leq C_{\widetilde{\sigma}} \, (\sigma')^{-|\beta|}$ for all $|t| < \widetilde{\sigma} < \sigma$. By (3.5), notice that $\theta'_\beta(t) \equiv \Theta'_\beta(h(t))$ over $M \cap \Delta_n(0,\rho)$ and inside D_p, so the holomorphic extendability of $\mathscr{R}'_h$ implies that all the components $\Theta'_\beta(h(t))$ extend holomorphically to $\Delta_n(0,\sigma)$. These preliminary observations are appropriate to obtain the following useful characterization of

the holomorphic extendability of $\mathscr{R}'_h$ which says in substance that it suffices that all its components $\Theta'_\beta(h(t))$ extend at p and then afterwards the Cauchy estimate holds automatically.

Lemma 3.16. *The following three properties are equivalent:*

- **(i)** *There exists $\sigma > 0$ with $\sigma < \rho$ and $\sigma < \rho'$ such that $\mathscr{R}'_h$ extends holomorphically to the polydisc $\Delta_n(0,\sigma) \times \Delta_n(0,\sigma)$.*
- **(ii)** *There exists $\sigma > 0$ with $\sigma < \rho$ such that all $\mathscr{C}^\infty$-smooth CR functions $\Theta'_\beta(h(t))$ defined on $M \cap \Delta_n(0,\rho)$ extend holomorphically to the polydisc $\Delta_n(0,\sigma)$ as holomorphic functions $\theta'_\beta(t)$ which satisfy the inequality $|\theta'_\beta(t)| \leq C\,(\sigma')^{-|\beta|}$ for some two positive constants $C > 0$, $\sigma' < \rho'$ and for all $|t| < \sigma$.*
- **(iii)** *There exists $\sigma > 0$ with $\sigma < \rho$ such that all $\mathscr{C}^\infty$-smooth CR functions $\Theta'_\beta(h(t))$ defined on $M \cap \Delta_n(0,\rho)$ extend holomorphically to the polydisc $\Delta_n(0,\sigma)$ as holomorphic functions $\theta'_\beta(t)$.*

Proof. Of course, **(i)** implies **(ii)** which in turn implies **(iii)** trivially. Conversely, let us show that **(iii)** implies **(ii)**. By (3.4) with $q = 0$, the Taylor series of h_j at the origin $H_j(t) := T_0^\infty \widetilde{h}_j(t)$ involves only holomorphic monomials t^α and *no* antiholomorphic monomial. We notice that the Taylor series at the origin of $\Theta'_\beta(h(t))$ coincides with the composition of formal power series $\Theta'_\beta(H(t))$. Consequently, by the assumption **(iii)**, the formal power series mapping $H(t)$ is a formal solution of some evident complex analytic equations. Indeed, we have

$$R'_\beta(t, H(t)) := \Theta'_\beta(H(t)) - \theta'_\beta(t) \equiv 0 \quad \text{in } \mathbb{C}[\![t]\!], \tag{3.17}$$

for all $\beta \in \mathbb{N}^{n-1}$. By the Artin approximation theorem (*see* [Ar]), there exists an analytic power series $\widetilde{H}(t)$ with $\widetilde{H}(0) = 0$, which converges normally in some polydisc, say $\Delta_n(0,\sigma)$ with $\sigma > 0$, and which satisfies

$$R'_\beta(t, \widetilde{H}(t)) := \Theta'_\beta(\widetilde{H}(t)) - \theta'_\beta(t) \equiv 0, \tag{3.18}$$

for all $t \in \Delta_n(0,\sigma)$. Shrinking σ if necessary, we may assume that for $|t| < \sigma$, we have $|\widetilde{H}(t)| < \sigma' < \rho'$. Then the Cauchy estimate (3.14) valuable for the $\Theta'_\beta(t')$ yields by composition a Cauchy estimate for $\Theta'_\beta(\widetilde{H}(t))$ which in turn yields the desired Cauchy estimate for the $\theta'_\beta(t)$ as stated in the end of **(ii)**, thanks to the relations (3.18). This completes the proof. $\square$

3.19. Invariance of the reflection function. Our definition of the reflection function $\mathscr{R}'_h$ seems to be unsatisfactory, because it heavily depends on the choice of coordinates and on the choice of a local defining function for (M', p'). Our purpose is now to show that Theorem 1.9 holds true for *every* system of coordinates provided it holds for *one* such system. This requires to analyze how the components $\Theta'_\beta(h(t))$ behave under the action of biholomorphisms. Let $t'' = \Lambda(t')$ be a local biholomorphic mapping such that $\Lambda(0) = 0$, denote $t'' = (z'', w'') = (z''_1, \ldots, z''_{n-1}, w'')$ and denote $\Lambda = (\Phi_1, \ldots, \Phi_{n-1}, \Psi)$ accordingly. By the implicit function theorem, if

we assume that the linear mapping $\pi'' \circ d\Lambda : T_0^c M' \to \mathbb{C}^{n-1}_{z''}$ is bijective, where $\pi'' : \mathbb{C}^n_{z'',w''} \to \mathbb{C}^{n-1}_{z''}$ is the projection parallel to the w'' axis, then the image $\Lambda(M')$ can also be defined locally in a neighborhood of the origin by a defining equation of the form $\bar{w}'' = \Theta''(\bar{z}'', t'')$ similar to that of M'. Equivalently, this differential geometric condition can be expressed by the nonvanishing

$$\det \left(\overline{L}'_j \, \overline{\Phi}_k(0)\right)_{1\leq j,k\leq n-1} \neq 0, \tag{3.20}$$

where the $\overline{L}'_j$ constitute a basis for the CR vector fields on M', namely $\overline{L}'_j = \partial_{\bar{z}'_j} + \Theta'_{\bar{z}'_j}(\bar{z}', t')\, \partial_{\bar{w}'}$ for $j = 1, \ldots, n-1$. Thus, we aim to compare the two reflection functions

$$\begin{cases} \mathscr{R}'_h(t, \bar{\nu}') := \bar{\mu}' - \displaystyle\sum_{\beta\in\mathbb{N}^{n-1}} (\bar{\lambda}')^\beta \, \Theta'_\beta(h(t)), \\ \mathscr{R}''_{\Lambda\circ h}(t, \bar{\nu}'') := \bar{\mu}'' - \displaystyle\sum_{\beta\in\mathbb{N}^{n-1}} (\bar{\lambda}'')^\beta \, \Theta''_\beta(\Lambda \circ h(t)). \end{cases} \tag{3.21}$$

Without loss of generality, we can assume that Θ'' converges normally in $\Delta_{2n-1}(0, \rho'')$ and that $\Lambda(\Delta_n(0, \rho'))$ is contained in $\Delta_n(0, \rho'')$. The following lemma exhibits the desired invariance under biholomorphic transformations fixing the center point p' and Lemma 3.37 below will show the invariance under local translations of the center point.

Lemma 3.22. *The following two conditions are equivalent:*

- **(i)** *There exists $\sigma > 0$ with $\sigma < \rho$ and $\sigma < \rho'$ such that $\mathscr{R}'_h(t, \bar{\nu}')$ extends holomorphically to the polydisc $\Delta_n(0, \sigma) \times \Delta_n(0, \sigma)$.*
- **(ii)** *There exists $\sigma > 0$ with $\sigma < \rho$ and $\sigma < \rho''$ such that $\mathscr{R}''_{\Lambda\circ h}(t, \bar{\nu}'')$ extends holomorphically to the polydisc $\Delta_n(0, \sigma) \times \Delta_n(0, \sigma)$.*

Proof. Of course, it suffices to prove that **(i)** implies **(ii)**, because Λ is invertible. The proof is a little bit long and calculatory, but the principle is quite simple (in advance, the reader may skip to equation (3.35) and to the paragraph following which explain well the relation between the components of the two reflection functions). As Λ maps M' into M'', there exists a converging power series $A(t', \bar{t}')$ such that the following identity holds for all t' with $|t'| < \rho'$:

$$\overline{\Psi}(\bar{t}') - \Theta''(\overline{\Phi}(\bar{t}'), \Lambda(t')) \equiv A(t', \bar{t}') \; [\bar{w}' - \Theta'(\bar{z}', t')] \tag{3.23}$$

Replacing $\bar{w}'$ by $\Theta'(\bar{z}', t')$ on the left hand side, we get an interesting formal power series identity at the origin in $\mathbb{C}^{2n-1}$

$$\overline{\Psi}(\bar{z}', \Theta'(\bar{z}', t')) \equiv \Theta''(\overline{\Phi}(\bar{z}', \Theta'(\bar{z}', t')), \Lambda(t')), \tag{3.24}$$

which converges for all $|\bar{z}'| < \rho'$ and $|t'| < \rho'$. Putting $\bar{z}' = 0$, we see first that

$$\overline{\Psi}(0, \Theta'(0, t')) \equiv \Theta''(\overline{\Phi}(0, \Theta'(0, t')), \Lambda(t')). \tag{3.25}$$

Next, we differentiate the relation (3.24) with respect to $\bar{z}'_j$ for $j = 1, \ldots, n-1$. Remembering that $\overline{L}'_j = \partial_{\bar{z}'_j} + \Theta'_{\bar{z}'_j}(\bar{z}', t')\, \partial_{\bar{w}'}$, we see that differentiation with respect to $\bar{z}'_j$ is the same as applying the operator $\overline{L}'_j$ and we get by the chain rule

(3.26)
$$\overline{L}'_j \overline{\Psi}(\bar{z}', \Theta'(\bar{z}', t')) \equiv \sum_{k=1}^{n-1} \overline{L}'_j \overline{\Phi}_k(\bar{z}', \Theta'(\bar{z}', t')) \, \frac{\partial \Theta''}{\partial \bar{z}''_k}(\overline{\Phi}(\bar{z}', \Theta'(\bar{z}', t')), \Lambda(t')).$$

Consider the following determinant, which, by the assumption (3.20) does not vanish at the origin:

$$\mathscr{D}'(\bar{z}', t') := \det \left(\overline{L}'_j \overline{\Phi}_k(\bar{z}', \Theta'(\bar{z}', t')) \right)_{1 \leq j, k \leq n-1}. \tag{3.27}$$

Shrinking ρ' if necessary, we can assume that $\mathscr{D}'$ is nonzero at every point of $\Delta_{2n-1}(0, \rho')$. Then using the rule of Cramer, we can solve in (3.26) the first order partial derivatives of Θ'' with respect to the rest. We obtain an expression of the form

(3.28)
$$\frac{\partial \Theta''}{\partial \bar{z}''_k}(\overline{\Phi}(\bar{z}', \Theta'(\bar{z}', t')), \Lambda(t')) \equiv \frac{R_k(\{(\overline{L}')^\gamma \overline{\Lambda}_i(\bar{z}', \Theta'(\bar{z}', t'))\}_{|\gamma|=1, 1 \leq i \leq n})}{\mathscr{D}'(\bar{z}', t')}.$$

Here, for every multi-index $\gamma \in \mathbb{N}^{n-1}$, we denote by $(\overline{L}')^\gamma$ the antiholomorphic derivation of order $|\gamma|$ defined by $(\overline{L}'_1)^{\gamma_1} \cdots (\overline{L}'_{n-1})^{\gamma_{n-1}}$. Moreover, in (3.28), it is a fact that the terms R_k are certain universal polynomials in their $n(n-1)$ arguments.

By differentiating again (3.28) with respect to the $\bar{z}'_j$, using Cramer's rule, and making an inductive argument, it follows that for every multi-index $\beta \in \mathbb{N}^{n-1}$, there exists a certain complicated but universal polynomial R_β such that the following relation holds:

(3.29)
$$\frac{1}{\beta!} \frac{\partial^{|\beta|} \Theta''}{\partial (\bar{z}'')^\beta}(\overline{\Phi}(\bar{z}', \Theta'(\bar{z}', t')), \Lambda(t')) \equiv \frac{R_\beta(\{(\overline{L}')^\gamma \overline{\Lambda}_i(\bar{z}', \Theta'(\bar{z}', t'))\}_{1 \leq |\gamma| \leq |\beta|, 1 \leq i \leq n})}{[\mathscr{D}'(\bar{z}', t')]^{2|\beta|-1}}.$$

Now, we put $\bar{z}' := 0$ in these identities. An important observation is in order. The composed derivations $(\overline{L}')^\gamma$ are certain differential operators with nonconstant coefficients. Using the explicit expression of the $\overline{L}'_j$, we see that all these coefficients are certain universal polynomials of the collection of partial derivatives $\{\partial^{|\delta|} \Theta'(\bar{z}', t') / \partial (\bar{z}')^\delta\}_{1 \leq |\delta| \leq |\gamma|}$. Thus the numerator of (3.29), after putting $\bar{z}' := 0$, becomes a certain holomorphic function of the collection $\{\Theta'_\gamma(t')\}_{0 \leq |\gamma| \leq |\beta|}$ (recall $\Theta'_\gamma(t') = \left[\frac{1}{\gamma!} \partial^{|\gamma|} \Theta'(\bar{z}', t') / \partial (\bar{z}')^\gamma \right]_{\bar{z}' := 0}$). A similar property holds for the denominator. In summary, we have shown that there exists an infinite collection of

holomorphic functions S_β of their arguments such that

$$\frac{1}{\beta!}\,\frac{\partial^{|\beta|}\Theta''}{\partial(\bar{z}'')^\beta}(\overline{\Phi}(0,\Theta'(0,t')),\Lambda(t')) \equiv S_\beta(\{\Theta'_\gamma(t')\}_{|\gamma|\leq|\beta|}) =: s_\beta(t'), \tag{3.30}$$

where the left and right hand sides are holomorphic functions of t' running in the polydisc $\Delta_n(0,\rho')$. Furthermore, by Cauchy's integral formula, there exists a positive constant C such that for all $|\bar{z}''|, |t''| < \rho''/2$, we have the majoration

$$\left|\frac{1}{\beta!}\,\frac{\partial^{|\beta|}\Theta''}{\partial(\bar{z}'')^\beta}(\bar{z}'',t'')\right| \leq C\,(\rho''/2)^{-|\beta|}. \tag{3.31}$$

Consequently we get the estimate $|s_\beta(t')| \leq C\,(\rho''/2)^{-|\beta|}$. Now, let us rewrite the relations (3.30) in a more explicit form, taking into account that $\Theta'(0,t') = \Theta'_0(t')$ by definition:

$$\begin{cases} \Theta''_\beta(\Lambda(t')) + \displaystyle\sum_{\gamma\in\mathbb{N}_*^{n-1}} (\overline{\Phi}(0,\Theta'_0(t')))^\gamma\,\frac{(\beta+\gamma)!}{\beta!\,\gamma!}\,\Theta''_{\beta+\gamma}(\Lambda(t')) \equiv \\ \qquad\qquad \equiv S_\beta(\{\Theta'_\delta(t')\}_{|\delta|\leq|\beta|}) =: s_\beta(t'), \end{cases} \tag{3.32}$$

where we denote $\mathbb{N}_*^{n-1} := \mathbb{N}^{n-1}\backslash\{0\}$. This collection of equalities may be considered as an infinite upper triangular linear system with unknowns being the functions $\Theta''_\beta(\Lambda(t'))$. This system can be readily inverted. Indeed, using Taylor's formula in the convergent case or proceeding directly at the formal level, it is easy to see that if we are given an infinite collection of equalities with complex coefficients and with $\zeta \in \mathbb{N}^{n-1}$ which is of the form

$$\Theta''_\beta + \sum_{\gamma\in\mathbb{N}_*^{n-1}} \zeta^\gamma\,\frac{(\beta+\gamma)!}{\beta!\,\gamma!}\,\Theta''_{\beta+\gamma} = S_\beta, \tag{3.33}$$

for all multi-indices $\beta \in \mathbb{N}^{n-1}$, then we can solve the unknowns Θ''_β in terms of the right hand side terms S_β by means of a totally similar formula, except for signs:

$$S_\beta + \sum_{\gamma\in\mathbb{N}_*^{n-1}} \zeta^\gamma\,(-1)^\gamma\,\frac{(\beta+\gamma)!}{\beta!\,\gamma!}\,S_{\beta+\gamma} = \Theta''_\beta, \tag{3.34}$$

for all $\beta \in \mathbb{N}^{n-1}$. Applying this observation to (3.32) and using the above Cauchy estimates on $s_\beta(t')$, we deduce the convergent representation

$$\begin{cases} \Theta''_\beta(\Lambda(t')) \equiv S_\beta(\{\Theta'_\delta(t')\}_{|\delta|\leq|\beta|}) + \\ \qquad + \displaystyle\sum_{\gamma\in\mathbb{N}_*^{n-1}} (\overline{\Phi}(0,\Theta'_0(t')))^\gamma\,(-1)^\gamma\,\frac{(\beta+\gamma)!}{\beta!\,\gamma!}\,S_{\beta+\gamma}(\{\Theta'_\delta(t')\}_{|\delta|\leq|\beta|+|\gamma|}), \end{cases} \tag{3.35}$$

which is valuable for $|t'| < \rho'$. Here, we recall that the functions S_β only depend on the biholomorphism Λ and that they are holomorphic with respect to their arguments. Now, we can prove that **(i)** implies **(ii)** in Lemma 3.22. By the equivalence between **(i)** and **(ii)** of Lemma 3.16, it suffices to show

that all component functions $\Theta''_\beta(\Lambda(h(t)))$ extend holomorphically to a neighborhood of the origin provided all component functions $\Theta'_\beta(h(t))$ extend holomorphically (by construction, the Cauchy estimates are already at hand). But this is evident by reading (3.35) after replacing t' by $h(t)$. This completes the proof of Lemma 3.22. $\square$

3.36. Translation of the center point. We have shown that the holomorphic extendability of the reflection function $\mathscr{R}'_h$ centered at *one* point $p \times \overline{h(p)}$ is an invariant property. On the other hand, suppose that $\mathscr{R}'_h$ is holomorphic in the product polydisc $\Delta_n(0,\sigma) \times \Delta_n(0,\sigma')$, for $0 < \sigma < \rho$ and $0 < \sigma' < \rho'$. Does it follow that the reflection functions centered at points $q \times \overline{h(q)} \in \Delta_n(0,\sigma) \times \Delta_n(0,\sigma')$ also extends holomorphically at these points ? Without loss of generality, we can assume that $h(M \cap \Delta_n(0,\rho)) \subset \Delta_n(0,\rho')$ and that $h(M \cap \Delta_n(0,\sigma)) \subset \Delta_n(0,\sigma')$. Let $q \in \Delta_n(0,\sigma)$ be an arbitrary point and set $q' := h(q)$. Recall that as in §3.1 above, we are given coordinates t and t' centered at the origin in which the equations of M and of M' are of the form $\bar{w} = \Theta(\bar{z},t)$ and $\bar{w}' = \Theta'(\bar{z}',t')$, with Θ converging normally in the polydisc $\Delta_{2n-1}(0,\rho)$ and similarly for Θ'. We can center new holomorphic coordinates at q and at q' simply by setting $t_* := t - q$ and $t'_* := t' - q'$. We shall denote $|q| =: \varepsilon$ and $|q'| =: \varepsilon'$. Let $M_* := M - q$ and $M'_* := M' - q'$ be the two new hypersurfaces obtained by such geometric translations. In the new coordinates, we naturally have two new defining equations $w_* = \Theta_*(\bar{z}_*,t_*)$ and $\bar{w}'_* = \Theta'_*(\bar{z}'_*,t'_*)$ for M_* and for M'_* with Θ_* converging (at least) in $\Delta_{2n-1}(0,\rho-\varepsilon)$ and with Θ'_* converging (at least) in $\Delta_{2n-1}(0,\rho'-\varepsilon')$. The explicit expression of Θ'_* will be computed in a while. Let $h_*(t_*) := h(q+t_*)$. Let $\bar{\nu}'_* := (\bar{\lambda}'_*,\bar{\mu}'_*) := \bar{\nu}' - \bar{q}'$. Define the transformed reflection function $\mathscr{R}'_{*h_*}(t_*,\bar{\nu}'_*)$ accordingly.

Lemma 3.37. *If $\varepsilon < \sigma$ and $\varepsilon' < \sigma'$, then the reflection function $\mathscr{R}'_{*h_*}(t_*,\bar{\nu}'_*) := \bar{\mu}'_* - \Theta'_*(\bar{\lambda}'_*,h_*(t_*))$ extends holomorphically to the polydisc $\Delta_n(0,\sigma-\varepsilon) \times \Delta_n(0,\sigma'-\varepsilon')$.*

Proof. At first, we compute the defining equation of M'_*. To obtain the explicit expression of Θ'_*, it suffices to transform the equation

(3.38)
$$\bar{w}' - \bar{w}_{q'} = \Theta'(\bar{z}',t') - \Theta'(\bar{z}'_{q'},t'_{q'}) = \sum_{\beta\in\mathbb{N}^{n-1}} (\bar{z}')^\beta\,\Theta'_\beta(t') - \sum_{\beta\in\mathbb{N}^{n-1}} (\bar{z}_{q'})^\beta\,\Theta'_\beta(t'_{q'})$$

in the form

$$\bar{w}'_* = \Theta'_*(\bar{z}'_*,t'_*) = \sum_{\beta\in\mathbb{N}^{n-1}} (\bar{z}'_*)^\beta\,\Theta'_{*\beta}(t'_*). \tag{3.39}$$

Differentiating with respect to $\bar{z}'$ and setting $\bar{z}' := \bar{z}'_{q'}$, we obtain

$$(3.40)\quad \begin{cases} \Theta'_{*0}(t'_*) := \displaystyle\sum_{\gamma\in\mathbb{N}^{n-1}} (\bar{z}'_{q'})^\gamma\, \Theta'_\gamma(q'+t'_*) - \sum_{\gamma\in\mathbb{N}^{n-1}} (\bar{z}'_{q'})^\gamma\, \Theta'_\gamma(q'), \\ \Theta'_{*\beta}(t'_*) := \Theta'_\beta(q'+t'_*) + \displaystyle\sum_{\gamma\in\mathbb{N}^{n-1}_*} (\bar{z}'_{q'})^\gamma\, \Theta'_{\beta+\gamma}(q'+t'_*)\, \frac{(\beta+\gamma)!}{\beta!\,\gamma!}, \end{cases}$$

for all $\beta \in \mathbb{N}^{n-1}_*$. Now, suppose that the reflection function $\mathscr{R}'_h(t,\bar{\nu}')$ in the old system of coordinates extends holomorphically to the product polydisc $\Delta_n(0,\sigma)\times\Delta_n(0,\sigma')$ as a function that we shall denote by

$$(3.41)\qquad R'(t,\bar{\nu}') := \bar{\mu}' - \sum_{\beta\in\mathbb{N}^{n-1}} (\bar{\lambda}')^\beta\, \theta'_\beta(t).$$

By Lemma 3.16, the functions $\theta'_\beta(t)$ are holomorphic in $\Delta_n(0,\sigma)$ and they extend holomorphically the $\mathscr{C}^\infty$-smooth CR functions $\Theta'_\beta(h(t))$ defined on $M\cap\Delta_n(0,\rho)$. Immediately, R' is holomorphic in an obvious product polydisc centered at $q\times\bar{q}'$, namely in $\Delta_n(q,\sigma-\varepsilon)\times\Delta_n(\bar{q}',\sigma'-\varepsilon')$. Let $t_* := t-q$ and $\bar{\nu}'_* := \bar{\nu}'-\bar{q}'$. The unique function $R'_*(t_*,\bar{\nu}'_*)$ satisfying

$$(3.42)\qquad R'(t,\bar{\nu}') = R'_*(t_*,\bar{\nu}'_*) = \bar{\mu}'_* - \sum_{\beta\in\mathbb{N}^{n-1}} (\bar{\lambda}'_*)^\beta\, \theta'_{*\beta}(t_*)$$

possesses coefficients necessarily given by

$$(3.43)\quad \begin{cases} \theta'_{*0}(t_*) := \displaystyle\sum_{\gamma\in\mathbb{N}^{n-1}} (\bar{z}'_{q'})^\gamma\, \theta'_\gamma(q+t_*) - \sum_{\gamma\in\mathbb{N}^{n-1}} (\bar{z}'_{q'})^\gamma\, \theta'_\gamma(q), \\ \theta'_{*\beta}(t_*) := \theta'_\beta(q+t_*) + \displaystyle\sum_{\gamma\in\mathbb{N}^{n-1}_*} (\bar{z}'_{q'})^\gamma\, \theta'_{\beta+\gamma}(q+t_*)\, \frac{(\beta+\gamma)!}{\beta!\,\gamma!}, \end{cases}$$

for all $\beta\in\mathbb{N}^{n-1}_*$. In the new coordinate system, the reflection function centered at $q\times\overline{h(q)}$ can be defined as

$$(3.44)\qquad \mathscr{R}'_{*h_*}(t_*,\bar{\nu}'_*) := \bar{\mu}'_* - \sum_{\beta\in\mathbb{N}^{n-1}} (\bar{\lambda}'_*)^\beta\, \Theta'_{*\beta}(h_*(t_*)),$$

for $t_*\in M_*$ with $|t_*|<\sigma-\varepsilon$. Substituting t'_* by $h_*(t_*)$ in the equations (3.40) and using afterwards that the $\theta'_\beta(t)$ extend the $\Theta'_\beta(h(t))$, we deduce that the functions

$$(3.45)\quad \begin{cases} \Theta'_{*0}(h_*(t_*)) = \displaystyle\sum_{\gamma\in\mathbb{N}^{n-1}} (\bar{z}'_{q'})^\gamma\, \Theta'_\gamma(h(q+t_*)) - \sum_{\gamma\in\mathbb{N}^{n-1}} (\bar{z}'_{q'})^\gamma\, \Theta'_\gamma(q'), \\ \Theta'_{*\beta}(h_*(t_*)) = \Theta'_\beta(h(q+t_*)) + \displaystyle\sum_{\gamma\in\mathbb{N}^{n-1}_*} (\bar{z}'_{q'})^\gamma\, \frac{(\beta+\gamma)!}{\beta!\,\gamma!}\, \Theta'_{\beta+\gamma}(h(q+t_*)) \end{cases}$$

extend holomorphically to the polydisc $\Delta_n(0,\sigma-\varepsilon)$ as functions of t_* given by the right hand sides of (3.43). The convergence of these series

follows from the Cauchy estimates on the $\theta'_\beta(t)$. This completes the proof of Lemma 3.37. $\square$

3.46. Delocalization and propagation. At this stage, we can summarize what the term "reflection function" really means. Let $h : M \to M'$ be a (not necessarily local) $\mathscr{C}^\infty$-smooth CR mapping between two connected real analytic CR manifolds. For any product of points $p \times \overline{h(p)}$ lying in the graph of $\bar{h}$ in $M \times \overline{M'}$ and for any system of coordinates t' vanishing at $p' := h(p)$ in which the complex defining equation of M' is an uniquely defined *graph* of the form $\bar{w}' = \Theta'(\bar{z}', t')$, we define the associated reflection *centered* at $p \times \overline{p'}$ by $\mathscr{R}_h(t, \bar{\nu}') := \bar{\mu}' - \Theta'(\bar{\lambda}', h(t))$. If it exists, its holomorphic extension at $p \times \overline{p'}$ is unique, thanks to the uniqueness principle on the boundary ([P1]). Also, its holomorphic extension does not depend on the system of coordinates t' vanishing at p'. And finally, its holomorphic extension propagates at nearby points. Although for some real analytic hypersurface M' there does not exist a *global* defining equation of the form $\bar{w}' = \Theta'(\bar{z}', t')$, we believe that the transformation rules explained in Lemmas 3.22 and 3.37 justify that we speak of "the" reflection function.

The two analytic relations (3.35) and (3.40) are extremely important. In §3.47 just below, we shall see that they permit to establish that certain CR geometric concepts defined in terms of the collection $(\Theta'_\beta(t'))_{\beta \in \mathbb{N}^{n-1}}$ are biholomorphically invariant.

3.47. The exceptional locus of M'. As above, let $p' \in M'$ and assume that the defining equation of M' converges normally in the polydisc $\Delta_{2n-1}(0, \rho')$. Let us consider the infinite Jacobian matrix of the infinite holomorphic mapping $\mathscr{Q}'_\infty(t') = (\Theta'_\beta(t'))_{\beta \in \mathbb{N}^{n-1}}$ introduced in §1.10:

$$\mathscr{J}_\infty(t') := (\partial \Theta'_\beta(t') / \partial t'_j)_{\beta \in \mathbb{N}^{n-1}, 1 \leq j \leq n}. \tag{3.48}$$

Concretely, by ordering the multi-indices β, we may think of $\mathscr{J}_\infty(t')$ as a horizontally infinite $\infty \times n$ complex matrix. Also, it is convenient to truncate this matrix by limiting the multi-indices to run over $|\beta| \leq k$. Let us denote such finite matrices by

$$\mathscr{J}_k(t') := (\partial \Theta'_\beta(t') / \partial t'_j)_{|\beta| \leq k, 1 \leq j \leq n}. \tag{3.49}$$

As a holomorphic mapping of t', the generic rank of $\mathscr{J}_k(t')$ increases with k. Let $\chi'_{M'}$ denote the maximal generic rank of these finite matrices. Equivalently, there exists a minor of size $\chi'_{M'}$ of the matrix $\mathscr{J}_\infty$ which does not vanish identically as a holomorphic function of t', but all minors of size $(\chi'_{M'} + 1)$ of $\mathscr{J}_\infty(t')$ do vanish identically. We call this integer the *generic rank* of the infinite matrix $\mathscr{J}_\infty(t')$. Of course, $\chi'_{M'}$ is at least equal to 1, because the term $\Theta'_0(t')$ does not vanish identically and is nonconstant (*see* §3.1). So we have $1 \leq \chi'_{M'} \leq n$. Apparently, the integer $\chi'_{M'}$ seems to depend on p' and on the choice of coordinates centered at p', but in fact it is a biholomorphic invariant of the hypersurface M' itself, which explains in

advance the notation. Recall that M' is connected, which is important. We shall check this invariance in two steps.

Lemma 3.50. *Let $p' \in M'$, let t' be a system of coordinates vanishing at p' and let t'' be another system of coordinates vanishing at p' defined by $t'' = \Lambda(t')$ as in Lemma 3.22. Then the two generic ranks of the associated infinite Jacobian matrices are identical.*

Proof. Looking at the family of relations (3.35) and applying the rank inequality for composed holomorphic mappings, we see that the generic rank of $\mathscr{J}_\infty(t'')$ is certainly less than or equal to the generic rank of $\mathscr{J}_\infty(t')$. As the mapping Λ is invertible, a relation similar to (3.35) holds if we reverse the rôles of t' and t'', and we get the opposite inequality between generic ranks. □

Lemma 3.51. *Let $p' \in M'$, let $q' \in M'$ be close to p' as Lemma 3.37 and consider the infinite Jacobian matrix $\mathscr{J}_\infty(t'_*)$ associated with the functions $\Theta'_{*\beta}(t'_*)$ defined by (3.40). Then the generic ranks of $\mathscr{J}_\infty(t')$ and of $\mathscr{J}_\infty(t'_*)$ coincide.*

Proof. This is immediate, because the relation (3.40) between the two collections $(\Theta'_{*\beta}(t'_*))_{\beta\in\mathbb{N}^{n-1}}$ and $(\Theta'_\beta(t'))_{\beta\in\mathbb{N}^{n-1}}$ is linear, upper triangular and invertible. □

So we may prove that $\chi'_{M'}$ is a global biholomorphic invariant of the connected hypersurface M'. Indeed, any two points $p'_1 \in M'$ and $p'_2 \in M'$ can be connected by a finite chain of intermediate points which are contained in pairs of overlapping coordinate system for which Lemmas 3.50 and 3.51 apply directly.

Here is an interesting and useful application. Locally in a neighborhood of an arbitrary point $p' \in M'$, we may define a *proper complex analytic* subset of $\Delta_n(0, \rho')$ denoted by $\mathscr{E}'$ which is obtained as the vanishing locus of all the minors of size $\chi'_{M'}$ of $\mathscr{J}_\infty(t')$. As in the proofs of Lemmas 3.50 and 3.51, by looking more closely at the two families of infinite relations (3.35) and (3.40), we observe that the set of points t' close to p' at which the *rank* of $\mathscr{J}_\infty(t')$ is maximal equal to $\chi'_{M'}$ is independent of coordinates. Consequently, the complex analytic set $\mathscr{E}'$, which we shall call the *extrinsic exceptional locus of* M', is an invariant complex analytic subset defined in a neighborhood of M' in $\mathbb{C}^n$. Moreover, $\mathscr{E}'$ is *proper* (*i.e.* of dimension $\leq n-1$), because $\chi'_{M'} \geq 1$, so there is at least one not identically zero minor in the definition of $\mathscr{E}'$. The *intrinsic exceptional locus of* M' denoted by $E'_{M'}$ is defined to be the intersection of $\mathscr{E}'$ with M'. This is also a *proper* real analytic subset of M' (maybe empty).

Lemma 3.52. *If M' is globally minimal, then the real dimension of $E'_{M'}$ is less than or equal to $(2n-3)$.*

Proof. Suppose on the contrary that there exists a stratum S of real dimension $(2n-2)$. This stratum cannot be generic at any point, because otherwise $\mathscr{E}'$ which contains S would be of complex dimension n. So S is

a complex hypersurface contained in M', contradicting local minimality at every point. $\square$

This dimension estimate should be compared to that of the Levi degeneracy locus: unless M' is everywhere Levi degenerate, the set of points at which M' is Levi degenerate is a proper real analytic subvariety, but in general of dimension less than or equal to $(2n-2)$, with this bound attained. This is so because the Levi degeneracy locus is *not* contained in a complex analytic subset of a neighborhood of M'. The fact that the real codimension of $E'_{M'}$ is at least two will be crucial for the proof of Theorems 9.2 and 9.3 below.

3.53. Local product structure at a Zariski-generic point. In the beginning of §4 below we shall need the following geometric straightening statement.

Lemma 3.54. *In a small neighborhood of an arbitrary point $q' \in M' \backslash E'_{M'}$, the hypersurface M' is biholomorphic to a product $\underline{M'}_{q'} \times \Delta^{n-\chi'_{M'}}$ by a polydisc of dimension $(n-\chi'_{M'})$, where $\underline{M'}_{q'}$ is a real analytic hypersurface in $\mathbb{C}^{\chi'_{M'}}$. Furthermore, at the point $\underline{q'}$, the rank of an associated infinite matrix $\underline{\mathscr{J}}_\infty(\underline{t'})$, where $\underline{t'} \in \mathbb{C}^{\chi'_{M'}}$ are holomorphic coordinates vanishing at $\underline{q'}$, is maximal equal to $\chi'_{M'}$.*

Proof. Choose coordinates t' vanishing at q'. By assumption, the mapping $t' \mapsto (\Theta'_\beta(t'))_{|\beta| \leq k}$ is of constant rank $\chi'_{M'}$ for all t' near the origin and for all k large enough. By the rank theorem, it follows that the union of level sets $\mathscr{F}_{r'} := \{t' : \Theta'_\beta(t') = \Theta'_\beta(r'), \forall\, \beta \in \mathbb{N}^{n-1}\}$ for r' running in a neighborhood of q' do constitute a local holomorphic foliation by complex leaves of dimension $n - \chi'_{M'}$. We can straighten this foliation in a neighborhood of q' so that (after an eventual dilatation) $\mathbb{C}^n$ decomposes as the product $\Delta^{\chi'_{M'}} \times \Delta^{n-\chi'_{M'}}$, where the second term corresponds to the leaves of this foliation. In these new straightening coordinates, which we will denote by t'', we claim that the leaves of this foliation are again defined by the level sets of the functions $\Theta''_\beta(t'')$, namely $\mathscr{F}_{r''} := \{t'' : \Theta''_\beta(t'') = \Theta''_\beta(r''), \forall\, \beta \in \mathbb{N}^{n-1}\}$. This is so, thanks to the important relations (3.35). For simplicity, let us denote these coordinates again by t' instead of t''. We claim that if the point r' belongs to M', then its leaf $\mathscr{F}_{r'}$ is entirely contained in M' in a neighborhood of q'. Indeed, let $s' \in \mathscr{F}_{r'}$, so we have $\Theta'_\beta(s') = \Theta'_\beta(r')$ for all $\beta \in \mathbb{N}^{n-1}$ by definition. It follows first that

$$0 = \bar{w}'_{r'} - \Theta'(\bar{z}'_{r'}, t'_{r'}) = \bar{w}'_{r'} - \Theta'(\bar{z}'_{r'}, t'_{s'}). \tag{3.55}$$

Next, thanks to the reality of M', there exists a nonzero holomorphic function $a'(t', \tau')$, where $\tau' = (\zeta', \xi') \in \mathbb{C}^{n-1} \times \mathbb{C}$, such that

$$\xi' - \Theta'(\zeta', t') \equiv a'(t', \tau') \left[w' - \overline{\Theta}'(z', \tau') \right], \tag{3.56}$$

for all t', τ' running in a neighborhood of the origin. Using crucially this identity, we can transform (3.55) as follows

$$0 = w'_{s'} - \overline{\Theta}'(z'_{s'}, \bar{t}'_{r'}). \tag{3.57}$$

Now, conjugating this new identity, we get $\bar{w}'_{s'} - \Theta'(\bar{z}'_{s'}, t'_{r'}) = 0$ and finally, using a second time $\Theta'_\beta(s') = \Theta'_\beta(r')$ for all $\beta \in \mathbb{N}^{n-1}$, we obtain

$$\bar{w}'_{s'} - \Theta'(\bar{z}'_{s'}, t'_{s'}) = 0, \tag{3.58}$$

which shows that $s' \in M'$, as claimed. In summary, in the straightened coordinates $(\underline{t}', \widetilde{t}') \in \mathbb{C}^{\chi'_{M'}} \times \mathbb{C}^{n-\chi'_{M'}}$, those leaves $\{\widetilde{t}' = ct.\}$ intersecting M' are entirely contained in M'. It follows that there exists a defining equation for M' in a neighborhood of the origin which is of the form

$$\underline{\overline{w}}' = \underline{\Theta}'(\underline{\overline{z}}', \underline{t}'), \tag{3.59}$$

namely it is independent of the coordinates $\widetilde{t}'$. We define $\underline{M}'_{q'}$ to be the hypersurface of $\mathbb{C}^{\chi'_{M'}}$ defined by the equation (3.59). The infinite Jacobian matrix $\mathscr{J}_\infty(t')$ of M' therefore coincides with the infinite Jacobian matrix of $\underline{M}'_{q'}$. By assumption, $\mathscr{J}_\infty(t')$ is of rank $\chi'_{M'}$ at the origin (this means that all finite submatrices $\mathscr{J}_k(t')$ are of rank $\chi'_{M'}$ for all large enough k). So the rank at the origin of $\underline{\mathscr{J}}_\infty(\underline{t}')$ is also equal to $\chi'_{M'}$. The proof of Lemma 3.54 is complete. $\square$

3.60. Pointwise nondegeneracy conditions on M'. We shall call the (always connected) hypersurface M' *holomorphically nondegenerate* if $\chi'_{M'} = n$. By examinating the proof of Lemma 3.54, one can see that this definition coincides with the original definition of Stanton [St1,2] in terms of tangent holomorphic vector fields (*cf.* also [Me5,§9]). By §3.47 above, holomorphic nondegeneracy is a global property of M'. Furthermore, we shall say that M' is *finitely nondegenerate* at the point p' if for one (hence for all) system(s) of coordinates vanishing at p', the rank of $\mathscr{J}_\infty(t')$ is equal to n at the origin. By the above definitions, a connected real analytic hypersurface M' is holomorphically nondegenerate if and only if there exists a proper complex analytic subset of a neighborhood of M' in $\mathbb{C}^n$, namely the extrinsic exceptional locus $\mathscr{E}'$, such that M' is finitely nondegenerate at every point of M' not belonging to $\mathscr{E}'$. Also, Lemma 3.54 above may be interpreted as a sort of geometric quotient procedure: locally in a neighborhood of a Zariski-generic point $q' \in M'$, *i.e.* for $q' \notin E'_{M'}$, after dropping the innocuous polydisc $\Delta^{n-\chi'_{M'}}$, we are left with a finitely nondegenerate real analytic hypersurface $\underline{M}'_{q'}$ in a smaller complex affine space. Finally, we shall say that M' is *essentially finite* at the point p' if for one (hence for all) system(s) of coordinates vanishing at p', the local holomorphic mappings $t' \mapsto (\Theta'_\beta(t'))_{|\beta| \leq k}$ are finite-to-one in a neighborhood of the origin for all k large enough. It can be checked that this definition coincides with the one introduced in [DW] and subsequently studied by many authors. We shall consider essentially finite hypersurfaces in §9 below.

3.61. Conclusion. All the considerations of this paragraph support well the thesis that *the collection of holomorphic functions* $(\Theta'_\beta(t'))_{\beta\in\mathbb{N}^{n-1}}$ *is the most important analytic object attached to a real analytic hypersurface* M' *localized at one of its points*.

§4. Extension across a Zariski dense open subset of M

4.1. Holomorphic extension at a Zariski-generic point. Let $h : M \to M'$ be a $\mathscr{C}^\infty$-smooth CR diffeomorphism between two connected real analytic hypersurfaces in $\mathbb{C}^n$.

Lemma 4.2. *If M is globally minimal, then M' is also globally minimal.*

Proof. Indeed, as h is CR, it sends every $\mathscr{C}^\infty$-smooth curve γ of M running into complex tangential directions diffeomorphically onto a curve $\gamma' := h(\gamma)$ also running in complex tangential directions. Then Lemma 4.2 is a direct consequence of the definition of CR orbits. We do not enter the details. □

The starting point of the proof of Theorem 1.9 is to show that the various reflection functions already extend holomorphically to a neighborhood of $q \times \overline{h(q)}$ for all points q running in the Zariski open subset $M\backslash E_M$ of M, where E_M is the intrinsic exceptional locus of M defined in the end of §3.47 above. It is convenient to observe first that h maps E_M bijectively onto $E'_{M'}$.

Lemma 4.3. *A point $q \in M$ belongs to $M\backslash E_M$ if and only if its image $h(q)$ belongs to $M'\backslash E'_{M'}$. Furthermore, $\chi_M = \chi'_{M'}$.*

Proof. Let $q \in M$ be arbitrary, let t be coordinates vanishing at q and let t' be coordinates vanishing at $q' := h(q)$ in which we have

$$\overline{g(t)} - \Theta'(\overline{f(t)}, h(t)) = a(t,\bar{t})\ [\bar{w} - \Theta(\bar{z}, t)]\,, \tag{4.4}$$

for all $t \in M$ close to the origin and for some nonvanishing function $a(t,\bar{t})$ of class $\mathscr{C}^\infty$. By developping the Taylor series of all $\mathscr{C}^\infty$-smooth functions in (4.4) and by polarizing, we see that the Taylor series H of h at the origin induces a formal mapping between (M, q) and (M', q'), namely there exists a formal power series $A(t,\tau)$ with nonzero constant term such that the following identity holds between formal power series in the $2n$ variables (t,τ):

$$\overline{G}(\tau) - \Theta'(\overline{F}(\tau), H(t)) \equiv A(t,\tau)\ [\xi - \Theta(\zeta, t)]\,. \tag{4.5}$$

Now, the computations of Lemma 3.22 can be performed at a purely formal level, replacing the mapping Λ there by the formal mapping H. We obtain a relation similar to (3.35), interpreted at the formal level, with Λ replaced by H. Using the invertibility of H to get a second relation like (3.35) with Λ replaced by H^{-1}, it then follows that the rank of the mapping $t \mapsto (\Theta_\beta(t))_{\beta\in\mathbb{N}^{n-1}}$ at q is the same as the rank of the mapping $t' \mapsto (\Theta'_\beta(t'))_{\beta\in\mathbb{N}^{n-1}}$ at $h(q)$. This property yields the desired conclusion. □

Thus, the starting point of the proof of Theorem 1.9 is the following Zariski dense holomorphic extension result.

Lemma 4.6. *If $h : M \to M'$ is a $\mathscr{C}^\infty$-smooth CR diffeomorphism between two globally minimal real analytic hypersurfaces in $\mathbb{C}^n$, then for every point $q \in M \backslash E_M$ lying outside the intrinsic exceptional locus of M and for every choice of a coordinate system vanishing at $q' := h(q)$ in which (M', q') is represented by $\bar{w}' = \Theta'(\bar{z}', t')$, the associated reflection function $\mathscr{R}'_h(t, \bar{\nu}') = \bar{\mu}' - \Theta'(\bar{\lambda}', h(t))$ extends holomorphically to a neighborhood of $q \times \overline{q'}$ in $\mathbb{C}^n \times \mathbb{C}^n$.*

Proof. First, by Lemma 4.3, we already know that q' does not belong to $E'_{M'}$ and that $\chi_M = \chi'_{M'}$. For short, let us denote this integer by χ. By Lemma 3.22, the holomorphic extendability of the reflection function is invariant, so let us choose adapted convenient coordinates. Using Lemma 3.54, we can find coordinates near $q' \in M'$ of the form $t' = (z', v', w') \in \mathbb{C}^{\chi-1} \times \mathbb{C}^{n-\chi} \times \mathbb{C}^1$ in which the equation of M' near the origin is given by $\bar{w}' = \Theta'(\bar{z}', z', w')$. Notice that the $(v', \bar{v}')$ coordinates do not appear in the defining equation, because of the product structure. We do the same straightening near $q \in M$, so that we can split the coordinates as $t = (z, v, w) \in \mathbb{C}^{\chi-1} \times \mathbb{C}^{n-\chi} \times \mathbb{C}^1$ in which the equation of M near the origin is also given in the form $\bar{w} = \Theta(\bar{z}, z, w)$. Finally, we split the mapping accordingly as $h = (f, l, g) \in \mathbb{C}^{\chi-1} \times \mathbb{C}^{n-\chi} \times \mathbb{C}^1$. It is important to notice that in these coordinates, the reflection function $\mathscr{R}'_h(t, \bar{\lambda}', \bar{v}', \bar{\nu}') = \bar{\mu}' - \Theta'(\bar{\lambda}', f(t), g(t))$, where $(\bar{\lambda}', \bar{v}', \bar{\nu}') \in \mathbb{C}^{\chi-1} \times \mathbb{C}^{n-\chi} \times \mathbb{C}^1$, *neither* depends on the $(n - \chi)$ middle components $(l_1, \ldots, l_{n-\chi}) = (h_\chi, \ldots, h_{n-1})$ of h *nor* on $\bar{v}'$. Clearly, to show that this reflection function extends holomorphically at $q \times \overline{q'}$, it would suffice to show that the χ components $(f_1, \ldots, f_{\chi-1}, g) = (h_1, \ldots, h_{\chi-1}, h_n)$ of h extend holomorphically to a neighborhood of the origin. We need some notation. Let $\underline{h}$ denote these χ special components (f, g), let $\underline{M}$ denote the hypersurface $\bar{w} = \Theta(\bar{z}, z, w)$ of $\mathbb{C}^\chi$ and similarly let $\underline{M}'$ denote the hypersurface $\bar{w}' = \Theta'(\bar{z}', z', w')$ of $\mathbb{C}^\chi$. *A priori*, it is not clear whether $\underline{h}$ induces a $\mathscr{C}^\infty$-smooth CR mapping between $(\underline{M}, \underline{q})$ and $(\underline{M}', \underline{q}')$, since $\underline{h}$ might well depend on the variables $(v_1, \ldots, v_{n-\chi})$.

Lemma 4.7. *The χ components $(f_1, \ldots, f_{\chi-1}, g)$ of h are independent of the $(n - \chi)$ coordinates v. Consequently, the mapping h induces a well defined CR mapping $\underline{h} : (\underline{M}, q) \to (\underline{M}', q')$ of class $\mathscr{C}^\infty$.*

Proof. Let $\overline{L}_1, \ldots, \overline{L}_{n-1}$ be a commuting basis of $T^{0,1}M$ with real analytic coefficients, for instance $\overline{L}_j = \frac{\partial}{\partial \bar{z}_j} + \Theta_{\bar{z}_j}(\bar{z}, z, w)\frac{\partial}{\partial \bar{w}}$ for $j = 1, \ldots, \chi - 1$ and also $\overline{L}_i = \frac{\partial}{\partial \bar{v}_i}$, for $i = 1, \ldots, n - \chi$. Notice that the $(1, 0)$ vector field L_i, $i = 1, \ldots, n - \chi$ commute with the $(0, 1)$ vector fields $\overline{L}_j$, $j = 1, \ldots, \chi - 1$. Since h is a $\mathscr{C}^\infty$-smooth CR diffeomorphism, after a possible linear change of coordinates, we can assume that the determinant $\mathscr{D}(t, \bar{t}) := \det \left(\overline{L}_j \bar{f}_k(\bar{t})\right)_{1 \le j,k \le \chi-1}$ is nonzero at the origin. Applying the derivations

$\overline{L}_1, \dots, \overline{L}_{\chi-1}$ to the fundamental identity $\overline{g(t)} = \Theta'(\overline{f(t)}, \underline{h}(t))$ for t on (M, q), we get first

$$\overline{L}_j \overline{g(t)} = \sum_{k=1}^{\chi-1} \overline{L}_j \overline{f_k(t)} \, \frac{\partial \Theta'}{\partial \bar{z}'_k}(\overline{f(t)}, \underline{h}(t)). \tag{4.8}$$

Shrinking $\sigma > 0$ if necessary, we can assume that the determinant $\mathscr{D}(t, \bar{t})$ does not vanish for all $|t| < \sigma$. By Cramer's rule, we can solve in (4.8) the first order partial derivatives $\partial_{\bar{z}'_k} \Theta'$ with respect to the other terms. As in the proof of Lemma 3.22, by induction, it follows that for every multi-index $\beta \in \mathbb{N}^{\chi-1}$, there exists a certain universal polynomial R_β such that the following relation holds for all $t \in M$ with $|t| < \sigma$:

$$\frac{1}{\beta!} \, \frac{\partial^{|\beta|} \Theta'}{\partial (\bar{z}')^\beta}(\overline{f(t)}, \underline{h}(t)) = \frac{R_\beta(\{(\overline{L})^\gamma \, \overline{\underline{h}(t)}\}_{|\gamma| \leq |\beta|})}{[\mathscr{D}(t, \bar{t})]^{2|\beta|-1}}. \tag{4.9}$$

Next, since by assumption the point q' does not belong to $E'_{M'}$, the second sentence of Lemma 3.54 tells us that there exists a positive integer k such that the rank of the mapping $\mathbb{C}^\chi \ni (z', w') \mapsto (\Theta'_\beta(z', w'))_{|\beta| \leq k}$ is maximal equal to $\chi = \chi'_{M'}$. Writing the equalities (4.9) only for $|\beta| \leq k$ and applying the implicit function theorem, it follows finally that we can solve $\underline{h}(t)$ with respect to the derivatives of $\overline{\underline{h}(t)}$, namely there exist χ *holomorphic* functions Ω_j in their variables such that for $j = 1, \dots, \chi$ and $t \in M$ with $|t| < \sigma$ (shrinking σ if necessary), we have:

$$\underline{h}_j(t) = \Omega_j(\{(\overline{L})^\gamma \, \overline{\underline{h}(t)}\}_{|\gamma| \leq k}) = \Omega_j(t, \bar{t}, \{\partial_{\bar{t}}^\gamma \overline{\underline{h}(t)}\}_{|\gamma| \leq k}). \tag{4.10}$$

Applying now the $n - \chi$ vector fields $L_i = \frac{\partial}{\partial v_i}$, $i = 1, \dots, n - \chi$, to these identities, using the fact that these ∂_{v_i} do commute with the antiholomorphic derivations $\overline{L}_1^{\gamma_1} \cdots \overline{L}_{\chi-1}^{\gamma_{\chi-1}}$, and noticing that the $\overline{\underline{h}(t)}$ are anti-CR, we obtain that the $\partial_{v_i} \underline{h}_j(t)$ do vanish identically on M near the origin. Since the $\underline{h}_j(t)$ are CR and of class $\mathscr{C}^\infty$, we already know that the derivatives $\partial_{\bar{v}_i} \underline{h}_j(t)$ also vanish identically on M near the origin. This proves that the $\underline{h}_j$ are independent of the coordinates $(v, \bar{v})$, as desired. $\square$

Finally, the following lemma achieves to prove that the reflection function, which only depends on $\underline{h}$, does extend holomorphically to a neighborhood of $q \times \overline{q'}$, as claimed.

Lemma 4.11. *The mapping $\underline{h}$ extends holomorphically to a neighborhood of the origin.*

Proof. The proof of this lemma is an easy generalization of the Lewy-Pinchuk reflection principle and in fact, it can be argued that Lemma 4.11 is almost completely contained in [P3] (and also in [W2,3], [DW]). Formally indeed, the calculations in the proof of Lemma 4.7 above are totally similar to the ones in the Levi nondegenerate case except for the order of derivations. Of course, the interest of derivating further the equations (4.8) does not lie in this (rather evident or gratuitous) generalization of the reflection

principle. Instead, the interest lies in the fact that there are large classes of everywhere Levi-degenerate hypersurfaces for which it is natural to introduce the concept of finite nondegeneracy expressed in terms of the fundamental functions $\Theta'_\beta(t')$. Indeed, finite nondegeneracy correspond to the (not rigorous, in the folklore) intuitive notion of "higher order Levi-forms". Furthermore, holomorphically nondegenerate hypersurfaces are almost everywhere finitely nondegenerate. In sum, from the point of view of local analytic CR geometry, higher order derivations are very natural.

Although Lemma 4.11 is explicitely stated or covered by [DW], [Ha], [BJT], *etc.*, we shall summarize its proof for completeness. Recall that by §3.6, the components of h extend holomorphically to a global one-sided neighborhood D of M which contains one side D_q of M at q. Let M^- denote the side of (M, q) containing D_q and let M^+ denote the other side. As in the Lewy-Pinchuk reflection principle, using the real analyticity of the coefficients of the $\overline{L}_j$ and using the one-dimensional Schwarz reflection principle in the complex lines $\{w = ct.\}$ which are transverse to M near the origin, we observe that the functions Ω_j in the right hand side of (4.10) extend $\mathscr{C}^\infty$-smoothly to M^+ as functions ω_j which are partially holomorphic with respect to the transverse variable w. Since by (4.10) the values of the $\underline{h}_j$ coincide on (M, q) with the values of the ω_j and since the $\underline{h}_j$ are already holomorphic inside D_q, it follows from a rather easy (because everything is $\mathscr{C}^\infty$-smooth) separate analyticity principle that the $\underline{h}_j$ and the ω_j stick together in holomorphic functions defined in a neighborhood of q. This provides the desired holomorphic extension of $\underline{h}$ and hence the holomorphic extension of $\mathscr{R}'_h$. The proofs of Lemmas 4.6 and 4.11 are complete. $\square$

4.12. Holomorphic extension of the mapping. We end up this paragraph by showing that Theorem 1.9 implies Theorem 1.14 (or equivalently Theorem 1.2). Under the assumptions of Theorem 1.14, let $p \in M$ be arbitrary and let t be coordinates vanishing at p. By the holomorphic extendability of the reflection function, we know that all the $\mathscr{C}^\infty$-smooth CR functions $\Theta'_\beta(h(t))$ extend as holomorphic functions $\theta'_\beta(t)$ to a fixed neighborhood of p. Thanks to the holomorphic nondegeneracy of M', there exist n different multi-indices $\beta^1, \dots, \beta^n \in \mathbb{N}^{n-1}$ such that the generic rank of the holomorphic mapping $t' \mapsto (\Theta'_{\beta^k}(t'))_{1 \le k \le n}$ equals $\chi'_{M'} = n$, or equivalently

$$\det\left([\partial\Theta'_{\beta^k}/\partial t'_l](t')\right)_{1 \le k, l \le n} \not\equiv 0 \quad \text{in } \mathbb{C}\{t'\}. \tag{4.13}$$

Let $H(t)$ denote the formal Taylor series of h at the origin. Since the Jacobian determinant of h at 0 does not vanish, it follows that (4.13) holds in $\mathbb{C}[\![t]\!]$ after t' is replaced by $H(t)$. Then the holomorphic extendability of h at the origin is covered by the following assertion.

Lemma 4.14. *Let $p \in M$, let t be coordinates vanishing at p, let $h_1, \dots, h_n$ be CR functions of class $\mathscr{C}^\infty$ on (M, p) vanishing at the origin, let $H_j(t)$*

denote the formal Taylor series of h_j *at* 0*, let* $Q'_1(t'), \dots, Q'_n(t')$ *be holomorphic functions satisfying*

$$\det\left([\partial Q'_k/\partial t'_l](H(t))\right)_{1\le k,l\le n} \not\equiv 0 \quad \text{in } \mathbb{C}[\![t]\!]. \tag{4.15}$$

Assume that there exist holomorphic functions $q'_1(t), \dots, q'_n(t)$ *defined in a neighborhood of the origin such that* $Q'_k(h(t)) \equiv q'_k(t)$ *for all* $t \in (M,p)$ *close to the origin. Then* $h_1(t), \dots, h_n(t)$ *extend holomorphically to a neighborhood of the origin.*

Proof. Clearly, the holomorphic functions $S'_{k,l}(t', t'_*)$ defined by the relations

$$Q'_k(t') - Q'_k(t'_*) = \sum_{l=1}^{n} S'_{k,l}(t', t'_*)\,(t'_l - t'_{*l}) \tag{4.16}$$

satisfy the relation $S'_{k,l}(t', t') = [\partial Q'_k(t')/\partial t'_l](t')$. We first prove that the Taylor series $H_j(t)$ are convergent. By the Artin approximation theorem ([Ar]), for every integer $N \in \mathbb{N}_*$, there exists a *converging* power series mapping $\mathscr{H}(t) \in \mathbb{C}\{t\}^n$ with $\mathscr{H}(t) \equiv H(t) \bmod |t|^N$ such that $Q'_k(\mathscr{H}(t)) \equiv q'_k(t)$. If N is large enough, it follows from the main assumption of Lemma 4.14 that the following formal determinant does not vanish identically in $\mathbb{C}[\![t]\!]$:

$$\det\left(S'_{k,l}(H(t), \mathscr{H}(t))\right)_{1\le k,l\le n} \not\equiv 0. \tag{4.17}$$

Finally, by the relation

$$\begin{cases} 0 = q'_k(t) - q'_k(t) = Q'_k(H(t)) - Q'_k(\mathscr{H}(t)) = \\ \quad = \displaystyle\sum_{l=1}^{n} S'_{k,l}(H(t), \mathscr{H}(t))\,[H_l(t) - \mathscr{H}_l(t)] \end{cases} \tag{4.18}$$

and thanks to the invertibility of the matrix $S'_{k,l}$ (*see* (4.17)), we deduce that $H_j(t) = \mathscr{H}_j(t)$ is convergent, as claimed. Secondly, for $t \in (M,p)$ close to the origin, we again use (4.16) with $t' := h(t)$ and $t'_* := \mathscr{H}(t)$, which yields a relation like (4.18) with $H(t)$ replaced by $h(t)$, namely

$$0 = Q'_k(h(t)) - Q'_k(\mathscr{H}(t)) = \sum_{l=1}^{n} S'_{k,l}(h(t), \mathscr{H}(t))\,[h_l(t) - \mathscr{H}_l(t)]. \tag{4.19}$$

Then the corresponding determinant (4.17) (with $H(t)$ replaced by $h(t)$) does not vanish identically on (M,p), because it has a nonvanishing formal Taylor series by (4.17) and because (M,p) is generic. Consequently, relation (4.19) implies that $h_l(t) \equiv \mathscr{H}_l(t)$ for all $t \in (M,p)$ close to the origin. This completes the proof of Lemma 4.14 (similar arguments are provided in [N]). Also, the proof of Theorem 1.14 (taking Theorem 1.9 for granted) is complete. $\square$

§5. Situation at a typical point of non-analyticity

Thus, we already know that $\mathscr{R}'_h$ is analytic at every point $q \times \overline{h(q)}$ for q running in the open dense subset $M \backslash E_M$ of M. It remains to show that $\mathscr{R}'_h$ is analytic at all the points $p \times \overline{h(p)}$, where $p \in E_M$, which entails $h(p) \in E'_{M'}$ by Lemma 4.3. This objective constitutes the principal task of the demonstration. In fact, we shall prove a slightly more general semi-global statement which we summarize as follows.

Theorem 5.1. *Let $h : M \to M'$ be a $\mathscr{C}^\infty$-smooth CR diffeomorphism between two globally minimal real analytic hypersurfaces in $\mathbb{C}^n$. If the local reflection mapping $\mathscr{R}'_h$ is analytic at* one *point $q \times \overline{h(q)}$ of $M \times M'$, then it is analytic at* every *point $p \times \overline{h(p)}$ of the graph of $\bar{h}$ in $M \times M'$.*

To prove Theorem 5.1, we shall proceed by contradiction. We define the following subset of M'

(5.2)
$$\mathscr{A}' := \{p' \in M' : \mathscr{R}'_h \text{ is analytic in a neighborhood of } h^{(-1)}(p') \times \overline{p'}\}.$$

A similar subset $\mathscr{A}$ of M such that h maps $\mathscr{A}$ bijectively onto $\mathscr{A}'$ can be defined, but in fact, it will be more adapted to our purposes to work in M' with $\mathscr{A}'$. Recall that we already know that Theorem 1.9 implies Theorem 1.2. However, for a direct proof of Theorem 1.2 (*cf.* §2), it would have been convenient to define the set $\mathscr{A}'$ above as the set of point $p' \in M'$ such that h is analytic in a neighborhood of $h^{-1}(p')$. Anyway, the set $\mathscr{A}'$ defined by (5.2) is nonempty, by the assumption of Theorem 5.1. For the proof of Theorem 1.9, $\mathscr{A}'$ is also nonempty, because it contains $M' \backslash E'_{M'}$ thanks to Lemma 4.6 above. So let us start with (5.2). If $\mathscr{A}' = M'$, Theorem 5.1 would be proved, gratuitously. As in §2.2, we shall therefore suppose that its complement $E'_{\mathrm{na}} := M' \backslash \mathscr{A}'$ is nonempty and we shall endeavour to derive a contradiction. In fact, to derive a contradiction, it clearly suffices to prove that there exists at least one point $p' \in E'_{\mathrm{na}}$ such that $\mathscr{R}'_h$ is analytic at $h^{(-1)}(p') \times \overline{p'}$. It is convenient to choose a "good" such point p'_1 which is geometrically well located, namely it belongs to E'_{na} and in a neighborhood of p'_1, the closed set E'_{na} is not too pathological or wild: it lies *behind* a smooth generic "wall" M'_1.

5.3. Construction of a generic wall. As in Lemma 2.3, this point p'_1 will belong to a generic one-codimensional submanifold $M'_1 \subset M'$, a kind of "wall" in M' dividing M' locally into two open sides, which will be disposed conveniently in order that one open side of the "wall", say M'^{-}_1, will *contain only points where $\mathscr{R}'_h$ is already real analytic*. To show the existence of such a point $p'_1 \in E'_{\mathrm{na}}$ and of such a manifold ("wall") M'_1, we shall proceed similarly as in [MP1, Lemma 2.3]. The following picture summarizes how we proceed intuitively speaking.

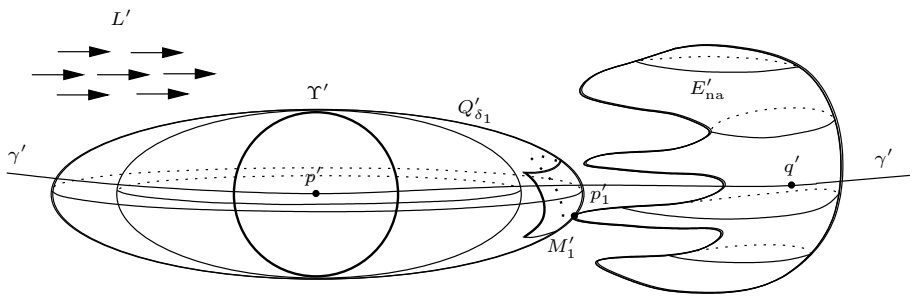

FIGURE 4: CONSTRUCTION OF THE GENERIC WALL BY BLOWING OUT ELLIPSOIDS

Lemma 5.4. *There is a point $p'_1 \in E'_{\mathrm{na}}$ and a real analytic generic hypersurface $M'_1 \subset M'$ passing through p'_1 so that $E'_{\mathrm{na}} \backslash \{p'_1\}$ lies near p'_1 in one side of M'_1* (see FIGURE 4).

Proof. Let $q' \in E'_{\mathrm{na}} \neq \emptyset$ be an arbitrary point and let γ' be a piecewise real analytic curve running in complex tangential directions to M' (CR-curve) linking q' with another point $p' \in M' \backslash E'_{\mathrm{na}}$. Such a curve γ' exists because M' and $M' \backslash E'_{\mathrm{na}}$ are globally minimal by assumption (in fact, every open subset of M' is globally minimal, because M' is locally minimal at every point). After shortening γ', we may suppose that γ' is a smoothly embedded segment, that p' and q' belong to γ' and are close to each other. Therefore γ' can be described as a part of an integral curve of some nonvanishing real analytic CR vector field (*i.e.* a section of $T^c M'$) L' defined in a neighborhood of p'.

Let $H' \subset M'$ be a small $(2n-2)$-dimensional real analytic hypersurface passing through p' and transverse to L'. Integrating L' with initial values in H' we obtain real analytic coordinates $(u', v') \in \mathbb{R} \times \mathbb{R}^{2n-2}$ so that for fixed v'_0, the segments (u', v'_0) are contained in the trajectories of L'. After a translation, we may assume that the origin $(0, 0)$ corresponds to a point of γ' close to p' which is not contained in E'_{na}, again denoted by p'. Fix a small $\varepsilon > 0$ and for real $\delta \geq 1$, define the ellipsoids (*see* again FIGURE 1 above)

$$Q'_\delta := \{(u', v') : |u'|^2/\delta + |v'|^2 < \varepsilon\}.$$

There is a minimal $\delta_1 > 1$ with $\overline{Q'_{\delta_1}} \cap E'_{\mathrm{na}} \neq \emptyset$. Then $\overline{Q'_{\delta_1}} \cap E'_{\mathrm{na}} = \partial Q'_{\delta_1} \cap E'_{\mathrm{na}}$ and $Q'_{\delta_1} \cap E'_{\mathrm{na}} = \emptyset$. Observe that every boundary $\partial Q'_\delta$ is transverse to the trajectories of L' out off the equatorial set $\Upsilon' := \{(0, v') : |v'|^2 = \varepsilon\}$ which is contained in $M' \backslash E'_{\mathrm{na}}$. Hence $\partial Q'_{\delta_1}$ is transverse to L' in all points of $\partial Q'_{\delta_1} \cap E'_{\mathrm{na}}$. So $\partial Q'_{\delta_1} \backslash \Upsilon'$ is generic in $\mathbb{C}^{m+n}$, since L' is a CR field.

To conclude, it suffices to choose a point $p'_1 \in \partial Q'_{\delta_1} \cap E'_{\mathrm{na}}$ and to take for M'_1 a small real analytic hypersurface passing through p'_1 which is tangent to $\partial Q'_{\delta_1}$ at p'_1 and satisfies $M'_1 \backslash \{p'_1\} \subset Q'_{\delta_1}$. $\square$

In summary, it suffices now for our purposes to establish the following assertion.

Theorem 5.5. *Let $p'_1 \in E'_{\text{na}}$ and assume that there exists a real analytic one-codimensional submanifold M'_1 with $p'_1 \in M'_1 \subset M'$ which is generic in $\mathbb{C}^n$ such that $E'_{\text{na}} \backslash \{p'_1\}$ is completely contained in one of the two open sides of M' divided by M'_1 at p'_1, say in M'^{+}_1, and such that $\mathscr{R}'_h$ is analytic at the points $h^{-1}(q') \times \overline{q'}$, for every point q' belonging to the other side M'^{-}_1. Then the reflection function $\mathscr{R}'_h$ extends holomorphically at the point $h^{-1}(p'_1) \times \overline{p'_1}$.*

By the CR diffeomorphism assumption, the formal Taylor series of h at p_1 induces an invertible formal CR mapping between (M, p_1) and (M', p'_1). It is shown in [Me6,8] that the associated formal reflection function converges at $p_1 \times \overline{p'_1}$ and (as a corollary) that there exists a local *biholomorphic equivalence* from (M, p_1) onto (M', p'_1). Consequently, it would be possible to suppose, without loss of generality, that $(M', p'_1) = (M, p_1)$ in Theorem 5.5. However, since the proof would be completely the same (except in notation), we shall maintain the general hypotheses. In coordinates t' vanishing at p'_1, we can assume that M' is given by the *real* equation $\operatorname{Im} w' = \varphi'(z', \bar{z}', \operatorname{Re} w')$, *i.e.* $v' = \varphi'(z', \bar{z}', u')$ if $w' := u' + iv'$, or equivalently by the *complex* equation $\bar{w}' = \Theta'(\bar{z}', t')$ with Θ' converging in the polydisc $\Delta_{2n-1}(0, \rho')$ and satisfying $\bar{w}' \equiv \Theta'(\bar{z}', z', \overline{\Theta}'(z', \bar{z}', \bar{w}'))$. In fact, given φ', the function Θ' is the unique solution of the implicit functional equation $w' - \Theta'(\bar{z}', t') \equiv 2i\,\varphi'(z', \bar{z}', (w' + \Theta'(\bar{z}', t'))/2)$. It is convient to choose the coordinates in order that $T_0 M' = \{w' = \bar{w}'\}$. Moreover, an elementary reasoning using only linear changes of coordinates and Taylor's formula shows that, after a possible deformation of the manifold M'_1 in a new manifold still passing through p'_1 which is bent quadratically in the left side M'^{-}_1, we can assume for simplicity that M'_1 is given by the two equations $\bar{w}' = \Theta'(\bar{z}', t')$ and $x'_1 = -[{y'_1}^2 + |z'_\sharp|^2 + {u'}^2]$, where we decompose $z'_1 = x'_1 + iy'_1$ in real and imaginary part and where we denote $z'_\sharp := (z'_2, \dots, z'_{n-1})$. In this notation, the new side M'^{-}_1 is given by:

$$M'^{-}_1 : \quad \{(z', w') \in M' : \, x'_1 < -[{y'_1}^2 + |z'_\sharp|^2 + {u'}^2]\}. \tag{5.6}$$

(*Warning*: For ease of readability, in Figure 5 below, we have drawn M'_1 as if the defining equation of M'_1 was equal to $x'_1 = +[{y'_1}^2 + |z'_\sharp|^2 + {u'}^2]$, so Figure 5 is slightly incorrect.) Shrinking ρ' if necessary, by Lemma 5.4, we know that $E'_{\text{na}} \backslash \{p'_1\}$ is contained in the right *open* part $M'^{+}_1 \cap \Delta_n(0, \rho')$. We set $p_1 := h^{-1}(p'_1)$ and $M_1 := h^{-1}(M'_1)$. Then M_1 is one-codimensional generic submanifold of M which is only of class $\mathscr{C}^\infty$, because the CR diffeomorphism h is only of class $\mathscr{C}^\infty$. The reader may observe that even if we take the conclusion of the proof of Theorem 5.5 for granted, namely even if we admit that $\mathscr{R}'_h$ is real analytic at $h^{-1}(p'_1) \times \overline{p'_1}$, it does *not* follow necessarily (unless M' is holomorphically nondegenerate) that h is real analytic (*cf.* Lemma 1.16), so the hypersurface $h^{-1}(M'_1)$ is *not* real analytic in

general. Let D be the global one-sided neighborhood of automatic extendability of CR functions on M constructed in §3.6. Let $D_{p_1} \subset D$ be a small local one-sided neighborhood of (M, p_1). Since we are working at p_1, we shall identify the two notations D_{p_1} and D in the sequel. By the considerations of §3.6, the reflection function $\mathscr{R}'_h$ associated with these coordinates is already holomorphic in $D \times \Delta_n(0, \rho')$, shrinking $\rho' > 0$ if necessary. Moreover, $\mathscr{R}'_h$ is also holomorphic at each point $h^{-1}(q') \times \overline{q'}$, for all q' belonging to $M_1'^-$ in a neighborhood of the origin. Using the computation of §3.36 (especially, equations (3.40)), we can make this property more explicit. Let $(\Psi'_{q'})_{q' \in M'}$ denote the family of biholomorphisms sending $q' \in M'$ to 0 simply obtained by translation of coordinates $t' \mapsto t'_* := t' - q'$. The $\Psi'_{q'}$ are holomorphically parametrized by $q' \in \Delta_n(0, \rho'/2)$. Let $\bar{w}'_* = \Theta'_*(\bar{z}'_*, t'_*)$ denote the corresponding equation of $\Psi'_{q'}(M')$. Let $h_{q'}$ denote the mapping $h - q'$ obtained by this translation of coordinates, namely $h_*(t) := h(t) - q'$. Let $q := h^{-1}(q')$. By assuming that the reflection function extends holomorphically to a neighborhood of $h^{-1}(q') \times \overline{q'}$ for every point $q' \in M_1'^-$, we mean precisely that each translated reflection function $\mathscr{R}'_{*,h_*}$ in these coordinates vanishing at q' extends holomorphically to a neighborhood of $q \times 0$. By Lemma 3.22, this property is invariant under changes of coordinates fixing $q \times 0$. However, we need to express this property in terms of a *single* coordinate system, for instance in the system t' vanishing at p'_1, and this is not obvious.

5.7. Holomorphic extendability in a fixed coordinate system. This part is delicate and we begin with some heuristic explanations. As presented in §2 with a slightly different definition of E'_{na}, in the situation of Theorem 1.2 (where M' is holomorphically nondegenerate) and of the corresponding Theorem 5.5, the mapping h already extends holomorphically to a neighborhood of M_1^- in $\mathbb{C}^n$. However, in the situation of Theorems 1.9 and 5.5, this is untrue in general. Consequently, we raise the following question: if we fix the coordinate system t' vanishing at the point $p'_1 \in M'_1$ of Theorem 5.5, is it also true that the components $\Theta'_\beta(h(t))$ extend holomorphically to a neighborhood of M_1^- in $\mathbb{C}^n$? Let $q' \in M_1'^-$ be close to the point p'_1, which is the origin in the coordinates t'. Let $t'_* := t' - t'_*$ as in §3.36. Let $\bar{w}'_* = \Theta'_*(\bar{z}'_*, t'_*)$ be the translated equation of M'. Also, denote $h(t) - q'$ by $h_*(t)$. By assumption, the reflection function $\bar{\mu}'_* - \Theta'_*(\bar{\lambda}'_*, h_*(t))$ extends holomorphically to $\Delta_n(q, \sigma_q) \times \Delta_n(0, \sigma'_{q'})$, for some two positive real numbers $\sigma_q > 0$ and $\sigma'_{q'} > 0$. By Lemma 3.16, we have a Cauchy estimate for the holomorphic extensions $\theta'_{*\beta}(t)$ of the components $\Theta'_{*\beta}(h(t))$ of the reflection function, say $|\theta'_{*\beta}(t)| \leq C\,(\sigma'_{q'})^{-|\beta|}$ for all $|t - q| < \sigma_q$. Possibly, $\sigma'_{q'}$ is smaller than $|q'|$. In the previous coordinate system t', it would be natural to deduce that the $\mathscr{C}^\infty$-smooth CR functions $\Theta'_\beta(h(t))$ extend holomorphically to a neighborhood of q in $\mathbb{C}^n$. Unfortunately, by formulas (3.43), we would necessarily have the following representation for the desired holomorphic extensions $\theta'_\beta(t)$ of the components $\Theta'_\beta(h(t))$ of the

reflection function (if the series would be convergent for $|t-q| \leq \sigma_q$):

$$\theta'_\beta(t) := \theta'_{*\beta}(t) + \sum_{\gamma \in \mathbb{N}_*^{n-1}} (\bar{z}'_{q'})^\gamma \, (-1)^\gamma \, \theta'_{*\beta+\gamma}(t) \, \frac{(\beta+\gamma)!}{\beta! \, \gamma!}. \tag{5.8}$$

For this formulas to converge *normally* and to define a holomorphic function of t, it would be necessary that the modulus of $\bar{z}'_{q'}$ be smaller than $\sigma'_{q'}$, which is *not a priori* true in general. This difficulty is meaningful, unavoidable and important.

At present, we may nevertheless observe a useful trick: *if $\bar{z}'_{q'}$ vanishes, then formulas (5.8) automatically yield holomorphic functions $\theta'_\beta(t)$ in the polydisc $\{|t-q| < \sigma_q\}$.* Indeed, if $\bar{z}'_{q'} = 0$, there are no infinite series at all ! Indeed, $\theta'_\beta(t) \equiv \theta'_{*\beta}(t)$. So choosing a point q' with vanishing coordinate $\bar{z}'_{q'}$ is a crucial observation allowing to bypass the nonconvergency of the series (5.8). Moreover, we will crucially use this trick in the proof of Lemma 7.7 (corresponding to Lemma 2.4). In sum, we have observed that Cauchy estimates might be killed after complex tangential displacement whereas they are trivially conserved after complex transversal displacement.

5.9. Holomorphic extension to a neighborhood of M_1^-. Fortunately, thanks to Artin's approximation theorem, we can bypass the general difficulty above and we can make $\sigma'_{q'}$ larger than $\bar{z}'_{q'}$ at the cost of reducing σ_q. In advance, the following Lemma 5.10 is adapted to its application in §7 below. Let $q'_1 \in M'$ be close to p'_1, let t' be a fixed system of coordinates centered at q'_1, so q'_1 is identified with the origin. Without loss of generality, we can assume that $h(M \cap \Delta_n(0,\rho/2)) \subset M' \cap \Delta_n(0,\rho'/2)$. Let $E \subset M \cap \Delta_n(0,\rho/2)$ be an arbitrary closed subset, not necessarily passing through the origin. Set $E' := h(E)$. As in Theorem 5.5, let us assume that the reflection function centered at points $q \times \overline{h(q)}$ is locally holomorphically extendable, for all $q \in (M \backslash E) \cap \Delta_n(0,\rho/2)$. Then the following holds.

Lemma 5.10. *In the fixed system of coordinates t' centered at q'_1, there exists a neighborhood Ω of $(M \backslash E) \cap \Delta_n(0,\rho/2)$ in $\mathbb{C}^n$ to which the components $\Theta'_\beta(h(t))$ of the reflection function extend holomorphically.*

Proof. So, let $q \in (M \backslash E) \cap \Delta_n(0,\rho/2)$ be an arbitrary point and let $q' := h(q)$. As in Lemma 3.37, let $t'_* := t' - q'$, let $t_* := t - q$ and let $\bar{\nu}'_* - \sum_{\beta \in \mathbb{N}^{n-1}} (\bar{\lambda}'_*)^\beta \, \Theta'_{*\beta}(h_*(t_*))$ be the reflection function centered at $q \times \overline{q'}$. Here, we have $|q| < \rho/2$ and $|q'| < \rho'/2$. Let $\sigma_q > 0$ and $\sigma'_{q'} > 0$ be such that $\mathscr{R}'_h(t,\bar{\nu}')$ extends as a holomorphic function $R'_*(t_*,\bar{\nu}'_*) := \bar{\mu}'_* - \sum_{\beta \in \mathbb{N}^{n-1}} (\bar{\lambda}'_*)^\beta \, \theta'_{*\beta}(t_*)$ for $|t_*| < \sigma_q$ and $|\bar{\nu}'_*| < \sigma'_{q'}$. Of course, it follows that the holomorphic functions $\theta'_{*\beta}(t_*)$ converge for $|t_*| < \sigma_q$ and that if $H_*(t_*)$ denotes the formal power series of $h_*(t_*)$ at $t_* = 0$, then $\Theta'_{*\beta}(H_*(t_*)) \equiv \theta'_{*\beta}(t_*)$ in $\mathbb{C}[\![t_*]\!]$. By Artin's approximation theorem, there exists a holomorphic mapping $\mathscr{H}_*(t_*)$ defined for $|t_*| < \sigma_* < \sigma_q$ such that $\Theta'_{*\beta}(\mathscr{H}_*(t_*)) \equiv \theta'_{*\beta}(t_*)$ in $\mathbb{C}\{t_*\}$. By the Cauchy

estimates for $\Theta'_\beta(t')$, since $|q'| < \rho'/2$, there exists a constant $C > 0$ such that we have $|\Theta'_{*\beta}(t'_*)| \leq C\,(\rho'/2)^{-|\beta|}$ for all $|t'_*| < \rho'/4$. Shrinking σ_* if necessary, we can assume that $|\mathscr{H}_*(t_*)| < \rho'/4$ for all $|t_*| < \sigma_*$. It follows that

$$|\Theta'_{*\beta}(\mathscr{H}_*(t_*))| = |\theta'_{*\beta}(t_*)| < C\,(\rho'/2)^{-|\beta|}, \tag{5.11}$$

for all $\beta \in \mathbb{N}^{n-1}$. Finally, this Cauchy estimate is appropriate to deduce that the series defined in equations (5.8) do converge normally and do define holomorphic extension to the polydisc $\Delta_n(q, \sigma_*)$ of the components of the reflection function centered at $q_1 \times \overline{q'_1}$. For all q running in $(M \backslash E) \cap \Delta_n(0, \rho/2)$, the various obtained extensions of course stick together thanks to the uniqueness principle at the boundary ([P1]). The proof of Lemma 5.10 is complete. $\square$

In particular, in the situation of Theorem 5.5, it follows from Lemma 5.10 (with $q_1 := p_1$) that we can assume that the components of the reflection function centered at $p_1 \times \overline{p'_1}$ extend holomorphically to a neighborhood of $(M \cap E_{\mathrm{na}}) \cap \Delta_n(0, \rho/2)$. Now we can begin our principal geometric constructions. As explained in §2.2, we intend to study the envelope of holomorphy of the union of $D \cup \Omega$ together with an arbitrary thin neighborhood of a Levi-flat hypersurface Σ_γ. We need real arcs and analytic discs.

§6. Envelopes of holomorphy of domains with Levi-flat hats

6.1. A family of real analytic arcs. To start with, we choose coordinates t and t' as above near M and near M' in which $p_1 := h^{-1}(p'_1)$ and p'_1 are the origin and in which the complex equations of M and of M' are given by $\bar{w} = \Theta(\bar{z}, t)$ and $\bar{w}' = \Theta'(\bar{z}', t')$ respectively. Geometrically speaking, it is convenient to assume $T_0 M = \{\operatorname{Im} w = 0\}$ and $T_0 M' = \{\operatorname{Im} w' = 0\}$. We shall denote the real equations of M and of M' by $v = \varphi(z, \bar{z}, u)$ and $v' = \varphi'(z', \bar{z}', u')$ respectively. We assume that the power series defining Θ and Θ' converge normally in the polydisc $\Delta_{2n-1}(0, \rho)$ and $\Delta_{2n-1}(0, \rho')$ respectively. For $q'_1 \in M'$ close to the origin in the target space, we now consider a convenient, sufficiently rich, family of embedded real analytic arcs $\gamma'_{q'_1}(s')$, depending on $(2n-1)$ very small real parameters $(z'_{q'_1}, u'_{q'_1}) \in \mathbb{C}^{n-1} \times \mathbb{R}$ satisfying $|z'_{q'_1}| < \varepsilon'$, $|u'_{q'_1}| < \varepsilon'$, where $\varepsilon' << \rho'$, with the "time parameter" s' satisfying $|s'| \leq \rho'/2$, which are all transverse to the complex tangential directions of M', and which are defined as follows:

(6.2)
$$\begin{cases} \gamma'_{q'_1} := \Big\{ (x'_{1,q'_1} - s'^2 - (y'_{1,q'_1} + s')^2 - |z'_{\sharp q'_1}|^2 - {u'_{q'_1}}^2 + i[y'_{1,q'_1} + s'], \\ \qquad\qquad , z'_{\sharp q'_1},\, u'_{q'_1}) \in M' \,:\, s' \in \mathbb{R},\, |s'| \leq \rho'/2 \Big\}. \end{cases}$$

Here, in the definition of $\gamma'_{q'_1}$, we identify a point of M' with its $(2n-1)$ real coordinates $(z', u') = (x'_1 + iy'_1, z'_\sharp, u')$. We also recall that $z'_\sharp = (z'_2, \ldots, z'_{n-1})$ and that M'^{-}_1 is given by (5.6). The following figure, in

which we have reversed the curvature of M_1' for easier readability, explains how the $\gamma'_{q_1'}$ and M_1' are disposed.

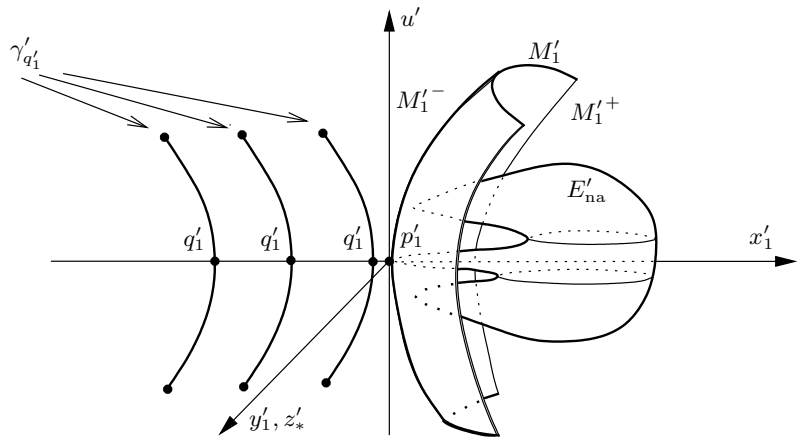

FIGURE 5: THE FAMILY OF REAL ANALYTIC ARCS ON THE LEFT SIDE OF THE WALL

We identify the arcs $\gamma'_{q_1'}$ with the mappings $s' \mapsto \gamma'_{q_1'}(s')$. It can be straightforwardly checked that the following properties hold:

(1) *The mapping* $(z'_{q_1'}, u'_{q_1'}) \mapsto \gamma'_{q_1'}(0)$ *is a real analytic diffeomorphism onto a neighborhood of* 0 *in* M'*. Furthermore, the inverse image of* M_1' *and of* $M_1'^-$ *simply correspond to the sets* $\{x'_{1,q_1'} = 0\}$ *and* $\{x'_{1,q_1'} < 0\}$*, respectively.*

(2) *For* $x'_{1,q_1'} < 0$*, we have* $\gamma'_{q_1'} \subset\subset M_1'^-$*.*

(3) *For* $x'_{1,q_1'} = 0$*, we have* $\gamma'_{q_1'} \cap M_1' = \{\gamma'_{q_1'}(0)\}$*.*

(4) *For* $x'_{1,q_1'} = 0$*, the order of contact of* $\gamma'_{q_1'}$ *with* M_1' *at the point* $\gamma'_{q_1'}(0)$ *equals* 2*.*

(5) For all $|z'_{q_1'}|, |u'_{q_1'}| < \varepsilon'$, we have $\gamma'_{q_1'}([-\rho'/2, -\rho'/4]) \subset M_1'^-$ and $\gamma'_{q_1'}([\rho'/4, \rho'/2]) \subset M_1'^-$.

6.3. Inverse images. Since h is a $\mathscr{C}^\infty$-smooth CR diffeomorphism, by inverse image, we get in M a family of $\mathscr{C}^\infty$-smooth arcs, namely $h^{-1}(\gamma'_{q_1'})$. In analogy with the notation $\gamma'_{q_1'}(s')$, we shall denote these arcs by $\gamma_{q_1}(s)$. By the index notation $\cdot_{q_1}$, we mean that these arcs are parametrized by the point $q_1 := h^{-1}(q_1') \in M$. Of course, a point $q_1 \in M$ can be identified with its coordinates $(z_{q_1}, u_{q_1}) \in \mathbb{C}^{n-1} \times \mathbb{R}$, so the arcs γ_{q_1} are concretely parameterized by $(z_{q_1}, u_{q_1}) \in \mathbb{C}^{n-1} \times \mathbb{R}$ and by the "time" $s \in \mathbb{R}$. It is convenient to identify the point p_1 with the origin (in the coordinate system t) and the point q_1 close to p_1 with its coordinates (z_{q_1}, u_{q_1}). Of course, shrinking a bit ρ if necessary, there exists $\varepsilon << \rho$ such that the parameters satisfy $|z_{q_1}| < \varepsilon$, $|u_{q_1}| < \varepsilon$ and $|s| \leq \rho/2$. Evidently, the $\mathscr{C}^\infty$-smooth arcs γ_{q_1} satisfy four properties similar to **(1–5)** above with respect to M_1. Let

us summarize the geometric properties that will be of important use later, when envelopes of holomorphy will appear on scene.

Lemma 6.4. *For all small $x_{1,q_1} < 0$ and $z_{\sharp,q_1}, u_{q_1}$ arbitrary, the following two properties holds:*

- **(1)** *The center points $\gamma_{q_1}(0)$ of the smooth arcs γ_{q_1} cover diffeomorphically the left negative one-sided neighborhood M_1^- of M_1 in a neighborhood of p_1.*
- **(2)** *The arcs γ_{q_1} are entirely contained in M_1^- and satisfy, $\gamma_{q_1}([-\rho/2, -\rho/4]) \subset M_1^-$ and $\gamma_{q_1}([\rho/4, \rho/2]) \subset M_1^-$,* even for small $x_{1,q_1} \geq 0$.

6.5. Construction of a family of Levi-flat hats. Next, if γ is a $\mathscr{C}^\infty$-smooth arc in M transverse to T^cM at each point, we can construct the union of Segre varieties attached to the points running in γ: $\Sigma_\gamma := \bigcup_{q\in\gamma} S_{\bar{q}}$. We remind that the Segre variety $S_{\bar{q}}$ associated to an arbitrary point q close to the origin is the complex hypersurface of $\Delta_n(0,\rho)$ of equation $w = \overline{\Theta}(z, \bar{t}_q)$. For various arcs γ_{q_1}, we obtain various sets $\Sigma_{\gamma_{q_1}}$ which are in fact $\mathscr{C}^\infty$-smooth Levi-flat hypersurfaces in a neighborhood of γ_{q_1}. The uniformity of the size of such neighborhoods follows immediately from the smooth dependence with respect to (z_{q_1}, u_{q_1}). Shrinking ρ if necessary, the Levi-flat hypersurface $\Sigma_{\gamma_{q_1}}$ is closed in $\Delta_n(0,\rho/3)$. What we shall need in the sequel can then be summarized as follows.

Lemma 6.6. *There exists $\varepsilon > 0$ with $\varepsilon << \rho$ such that, if the parameters of γ_{q_1} satisfy $|z_{q_1}|, |u_{q_1}| < \varepsilon$, then the set $\Sigma_{\gamma_{q_1}} \cap \Delta_n(0,\rho/3)$ is a closed $\mathscr{C}^\infty$-smooth* (*and $\mathscr{C}^\infty$-smoothly parametrized*) Levi-flat *hypersurface of $\Delta_n(0,\rho/3)$.*

6.7. Two families of half-attached analytic discs. Let us now define inverse images of analytic discs. Complexifying the real analytic arcs $\gamma'_{q'_1}$, we obtain local transverse holomorphic discs $(\gamma'_{q'_1})^c$, closed in $\Delta_n(0,\rho/2)$, of which one half part penetrates inside $D' := h(D)$. Uniformly smoothing out the corners of such half discs (*see* the right hand side of FIGURE 3), using Riemann's conformal mapping theorem and then an automorphism of Δ, we can easily construct a real analytically parameterized family of analytic discs $A'_{q'_1} : \Delta \to \mathbb{C}^n$ which are $\mathscr{C}^\infty$-smooth up to the boundary $b\Delta$ and are embedding of $\overline{\Delta}$ such that, if we denote $b^+\Delta := b\Delta \cap \{\mathrm{Re}\,\zeta \geq 0\}$ (and $b^-\Delta := b\Delta \cap \{\mathrm{Re}\,\zeta \leq 0\}$), then we have $A'_{q'_1}(1) = \gamma'_{q'_1}(0)$ and also:

$$\gamma'_{q'_1} \cap \Delta_n(0,\rho'/4) \subset A'_{q'_1}(b^+\Delta) \subset \gamma'_{q'_1} \cap \Delta_n(0,\rho'/3), \tag{6.8}$$

for all $|z'_{q'_1}|, |u'_{q'_1}| < \varepsilon'$ (*cf.* FIGURES 2 and 3). Consequently, the composition with h^{-1} yields a family of analytic discs $A_{q_1}(\zeta) := h^{-1}(A'_{q'_1}(\zeta))$ which satisfy similar properties, namely:

Lemma 6.9. *The mapping $(q_1, \zeta) \mapsto A_{q_1}(\zeta)$ is $\mathscr{C}^\infty$-smooth and it provides a uniform family of $\mathscr{C}^\infty$-smooth embeddings of the closed unit disc $\overline{\Delta}$ into*

$\mathbb{C}^n$. *Furthermore, we have* $A_{q_1}(1) = \gamma_{q_1}(0)$ *and*

$$\gamma_{q_1} \cap \Delta_n(0, \rho/4) \ \subset \ A_{q_1}(b^+\Delta) \ \subset \ \gamma_{q_1} \cap \Delta_n(0, \rho/3). \tag{6.10}$$

Finally, we have $A_{q_1}(b^-\Delta) \subset\subset D \cup M_1^-$.

This family A_{q_1} will be our starting point to study the envelope of holomorphy of (a certain subdomain of) the union of D together with a neighborhood Ω of M_1^- and with an arbitrarily thin neighborhood $\omega(\Sigma_{\gamma_{q_1}})$ of $\Sigma_{\gamma_{q_1}}$ (*see* FIGURE 3 and FIGURE 6 below). At first, we must include A_{q_1} into a larger family of discs obtained by sliding the half-attached part inside $\Sigma_{\gamma_{q_1}}$ along the complex tangential directions of $\Sigma_{\gamma_{q_1}}$.

6.11. Deformation of half-attached analytic discs. To this aim, we introduce the equation $v = H_{q_1}(z, u)$ of $\Sigma_{\gamma_{q_1}}$, where the mapping $(q_1, z, u) \mapsto H_{q_1}(z, u)$ is of course $\mathscr{C}^\infty$-smooth and $||H_{q_1} - H_{p_1}||_{C^\infty(z,u)}$ is very small. Further, we need some formal notation. We denote $A_{q_1}(\zeta) := (z_{q_1}(\zeta), u_{q_1}(\zeta))$ and $A_{q_1}(1) = \gamma_{q_1}(0) =: (z^1_{q_1}, u^1_{q_1})$. To deform these discs by applying the classical works on analytic discs and because Banach spaces are necessary, we shall work in the regularity class $\mathscr{C}^{k,\alpha}$, where $k \geq 1$ is arbitrary and where $0 < \alpha < 1$, which is sufficient for our purposes. Let T_1 denote the Hilbert transform vanishing at 1 (*see* [Tu1,2,3], [MP1,2]). By definition, T_1 is the unique (bounded, by a classical result) endomorphism of the Banach space $\mathscr{C}^{k,\alpha}(b\Delta, \mathbb{R})$, $0 < \alpha < 1$, to itself such that $\phi + iT_1(\phi)$ extends holomorphically to Δ and $T_1\phi$ vanishes at $1 \in b\Delta$, *i.e.* $(T_1(\phi))(1) = 0$. Our next reasoning below is similar to the one in Aĭrapetyan [Aĭ]: we shall "translate" a small analytic disc which is attached to a pair of transverse hypersurfaces. We know that the disc A_{q_1} has one half of its boundary attached to the smooth hypersurface $v = H_{q_1}(z, u)$. After a possible linear change of coordinates, we can assume that the other half is attached to another real hypersurface Λ_{q_1} of equation $v = G_{q_1}(z, u)$ smoothly depending on the parameter q_1. Indeed, since the half disc is transverse to $\Sigma_{\gamma_{q_1}}$ along $b^+\Delta$ and an embedding of $\overline{\Delta}$ into $\mathbb{C}^n$, there exist infinitely many such hypersurfaces Λ_{q_1}. Furthermore, we can asssume that A_{q_1} sends neighborhoods of i and $-i$ in $b\Delta$ into the intersection of the two hypersurfaces $\Sigma_{\gamma_{q_1}} \cap \Lambda_{q_1}$. Let φ^- and φ^+ be two $\mathscr{C}^\infty$-smooth functions on $b\Delta$ satisfying $\varphi^- \equiv 0$, $\varphi^+ \equiv 1$ on $b^+\Delta$ and $\varphi^- + \varphi^+ = 1$ on $b\Delta$. The fact that our disc is half attached to $\Sigma_{\gamma_{q_1}}$ and half attached to Λ_{q_1} can be expressed by saying that

$$v_{q_1}(\zeta) = \varphi^+(\zeta)\, H_{q_1}(z_{q_1}(\zeta), u_{q_1}(\zeta)) + \varphi^-(\zeta)\, G_{q_1}(z_{q_1}(\zeta), u_{q_1}(\zeta)), \tag{6.12}$$

for all $\zeta \in b\Delta$. Since the two functions u_{q_1} and v_{q_1} on $b\Delta$ are harmonic conjugates, the following (Bishop) equation is satisfied on $b\Delta$ by u_{q_1}:

$$u_{q_1}(\zeta) = -\left[T_1\left(\varphi^+\, H_{q_1}(z_{q_1},\, u_{q_1}) + \varphi^-\, G_{q_1}(z_{q_1},\, u_{q_1})\right)\right](\zeta). \tag{6.13}$$

We want to perturb these discs A_{q_1} by "translating" them along the complex tangential directions to $\Sigma_{\gamma_{q_1}}$. Introducing a new parameter $\sigma \in \mathbb{C}^{n-1}$ with $|\sigma| < \varepsilon$, we can indeed include the discs A_{q_1} into a larger parameterized

family $A_{q_1,\sigma}$ by solving the following perturbed Bishop equation on $b\Delta$ with parameters (q_1, σ):
(6.14)
$$u_{q_1,\sigma}(\zeta) = -\left[T_1\left(\varphi^+ H_{q_1}(z_{q_1}+\sigma,\, u_{q_1,\sigma}) + \varphi^- G_{q_1}(z_{q_1}+\sigma,\, u_{q_1,\sigma})\right)\right](\zeta).$$

For instance, the existence and the $\mathscr{C}^{k,\beta}$-smoothness (with $0 < \beta < \alpha$ arbitrary) of a solution $u_{q_1,\sigma}$ to (6.14) follows from Tumanov's work [Tu3]. Clearly the solution disc $A_{q_1,\sigma}$ is half attached to $\Sigma_{\gamma_{q_1}}$. Differentiating the mapping $\mathbb{C}^{n-1} \times b^+\Delta \ni (\sigma, \zeta) \mapsto (z_{p_1}(\zeta)+\sigma, u_{p_1,\sigma}(\zeta)) \in \Sigma_{\gamma_{p_1}}$ at the point 0×1, using the fact that $A_{p_1}(b^+\Delta)$ is tangent to the u-axis at p_1 (since γ_{p_1} is tangent to the u-axis at p_1) which gives $[\frac{d}{d\theta}(z_{p_1}(e^{i\theta}))]_{\theta=0} = 0$, we obtain easily property **(3)** of the next statement. Notice that since the discs are $\mathscr{C}^{k,\beta}$ for all k, and since the solution $u_{q_1,\sigma}$ of the modified Bishop equation (6.14) is the same in $\mathscr{C}^{k,\beta}$ and in $\mathscr{C}^{l,\beta}$, the discs $A_{q_1,\sigma}$ are in fact of class $\mathscr{C}^\infty$ with respect to all the variables.

Lemma 6.15. *The $\mathscr{C}^\infty$-smooth deformation ("translation" type) of analytic discs $(q_1, \sigma, \zeta) \mapsto A_{q_1,\sigma}(\zeta)$ is defined for $|q_1| < \varepsilon$ and for $|\sigma| < \varepsilon$ and satisfies the following three properties:*

- **(1)** $A_{q_1,0} \equiv A_{q_1}$.
- **(2)** $A_{q_1,\sigma}(b^+\Delta) \subset \Sigma_{\gamma_{q_1}}$ *for all* σ.
- **(3)** *The mapping* $\mathbb{C}^{n-1} \times b^+\Delta \ni (\sigma, \zeta) \mapsto A_{p_1,\sigma}(\zeta) \in \Sigma_{\gamma_{p_1}}$ *is a local* $\mathscr{C}^\infty$ *diffeomorphism from a neighborhood of* 0×1 *onto a neighborhood of* $A_{p_1}(1) = p_1$ *in* $\Sigma_{\gamma_{p_1}}$.

6.16. Preliminary to applying the continuity principle. At first, we shall let the parameters (q_1, σ) range in certain new precise subdomains. We choose a positive $\delta < \varepsilon$ with the property that the range of the mapping in **(3)** above, when restricted to $\{|\sigma| < \delta\} \times b^+\Delta$, *contains* the intersection of $\Sigma_{\gamma_{p_1}}$ with a small polydisc $\Delta_n(0, 2\eta)$, for some $\eta > 0$. Recall that p_1 is identified with the origin $0 \in \mathbb{C}^n$. Of course, there exists a constant $c > 1$, depending only on the Jacobian matrix of the mapping in **(3)** at 0×1 such that $c^{-1}\,\delta \leq \eta \leq c\,\delta$. Let $\Delta(1, \delta)$ denote the disc of radius δ centered at $1 \in \mathbb{C}$. Furthermore, since the boundary of the disc $A_{p_1,0}$ is transversal to $T_0^c\Sigma_{\gamma_{p_1}}$, then after shrinking a bit η if necessary, we can assume that the set $\{A_{p_1,\sigma}(\zeta) : |\sigma| < \delta,\ \zeta \in \Delta \cap \Delta(1, \delta)\}$ *contains and foliates by half analytic discs the whole lower side* $\Delta_n(0, 2\eta) \cap \Sigma^-_{\gamma_{p_1}}$ (*see* FIGURE 6). Of course, the side $\Sigma^-_{\gamma_{p_1}}$ is "the same side" as M^-, *i.e.* the side of $\Sigma_{\gamma_{p_1}}$ where the greatest portion of D lies. However, D is in general *not* entirely contained in $\Sigma^-_{\gamma_{p_1}}$, because the Segre varieties $S_{\bar{q}}$ for $q \in \gamma_{p_1}$ may well intersect D.

As presented in §2, we now fix a neighborhood Ω of M_1^- in $\mathbb{C}^n$ to which all the components of the reflection function extend holomorphically. Such a neighborhood is provided by Lemma 5.10 above. Let $\omega(\Sigma_{\gamma_{q_1}})$ be an arbitrary neighborhood of $\Sigma_{\gamma_{q_1}}$ in $\mathbb{C}^n$. Our goal is to show that the envelope of holomorphy of $\Omega \cup D \cup \omega(\Sigma_{\gamma_{q_1}})$ contains at least the lower side

$\Delta_n(0,\eta)\cap\Sigma^-_{\gamma_{q_1}}$ for all q_1 small enough. We shall apply this to the components of the reflection function in §7 below.

By construction, the half parts $A_{q_1,\sigma}(b^+\Delta)$ are all contained in $\Sigma_{\gamma_{q_1}}$. It remains now to control the half parts $A_{q_1,\sigma}(b^-\Delta)$. Using the last property of Lemma 6.9, namely $A_{q_1,0}(b^-\Delta)\subset\subset D\cup M_1^-$, it is clear that, after shrinking δ if necessary, then we can insure that $A_{q_1,\sigma}(b^-\Delta)\subset\subset D\cup\Omega$ for all $|q_1|<\varepsilon$ and all $|\sigma|<\delta$. Of course, this shrinking will result in a simultaneous shrinking of η, and we still have the important inclusion relation: $\{A_{p_1,\sigma}(\zeta)\ :\ |\sigma|<\delta,\ \zeta\in\Delta\cap\Delta(1,\delta)\}\supset\Delta_n(0,2\eta)\cap\Sigma^-_{\gamma_{p_1}}$. Finally, shrinking again ε if necessary, we then come to a situation that we may summarize:

Lemma 6.17. *For all $|q_1|<\varepsilon$ and $|\sigma|<\delta$, we have:*

$$\begin{cases}\{A_{q_1,\sigma}(\zeta)\ :|\sigma|<\delta,\ \zeta\in\Delta\cap\Delta(1,\delta)\}\ \supset\ \Delta_n(0,\eta)\cap\Sigma^-_{\gamma_{q_1}},\\ A_{q_1,\sigma}(b^+\Delta)\subset\Sigma_{\gamma_{q_1}}\ \text{ and }\ A_{q_1,\sigma}(b^-\Delta)\subset\subset D\cup\Omega,\end{cases}\tag{6.18}$$

Shrinking ε if necessary we can also insure that the intersection of D with $\Delta_n(0,\eta)\cap\Sigma^-_{\gamma_{q_1}}$ is *connected* for all $|q_1|<\varepsilon$. Implicitely, we assume that $\varepsilon<<\delta$, hence also $\varepsilon<<\eta$.

6.19. Envelopes of holomorphy. We are now in position to state and to prove the main assertion of this paragraph. Especially, the following lemma will be applied to each member of the collection $\{\Theta'_\beta(h(t))\}_{\beta\in\mathbb{N}^{n-1}}$ in §7 below.

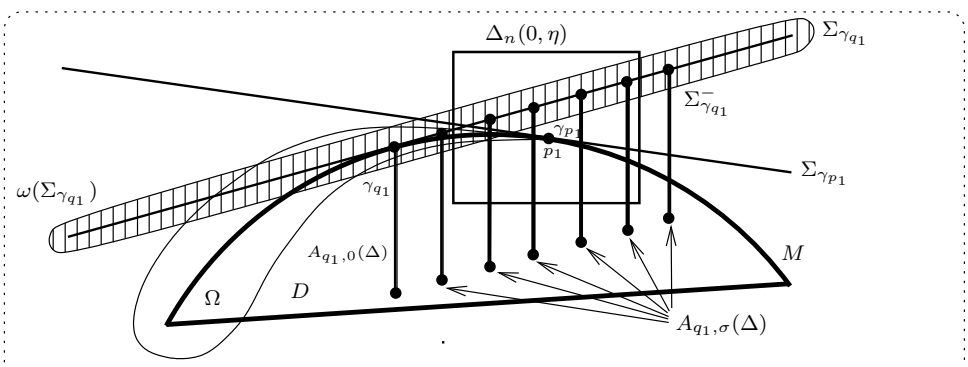

FIGURE 6: PART OF THE ENVELOPE OF HOLOMORPHY OF THE HAT DOMAIN

Lemma 6.20. *Let $\delta,\ \eta,\ \varepsilon>0$ as above, namely satisfying $\delta\simeq\eta$, $\varepsilon<<\delta$ and $\varepsilon<<\eta$. If $\delta>0$ is sufficiently small, then the following holds. If a holomorphic function $\psi\in\mathscr{O}(D\cup\Omega)$ extends holomorphically to a neighborhood $\omega(\Sigma_{\gamma_{q_1}})$ in $\mathbb{C}^n$, then there exists a unique holomorphic function $\Psi\in\mathscr{O}(D\cup[\Delta_n(0,\eta)\cap\Sigma^-_{\gamma_{q_1}}])$ such that $\Psi|_D\equiv\psi$.*

Proof. This is an application of the Behnke-Sommer Kontinuitätssatz (*see* FIGURE 6). Let q_1 with $|q_1| < \varepsilon$. We shall explain later how we choose $\delta > 0$ sufficiently small. Let $\psi \in \mathscr{O}(D \cup \Omega)$. By assumption, there exists a holomorphic function $\psi_\omega \in \mathscr{O}(\omega(\Sigma_{\gamma_{q_1}}))$ such that $\psi_\omega = \psi$ in a neighborhood of $\gamma_{q_1}([-\rho/2, \rho/2]) \cap \Delta_n(0, \rho/3)$ in $\mathbb{C}^n$. First of all, we must construct a domain $B_{q_1} \subset D \cup \Omega$ sufficiently large such that ψ and ψ_ω stick together in a unique holomorphic function defined in the union $B_{q_1} \cup \omega(\Sigma_{\gamma_{q_1}})$. To get this extension property, we need that $B_{q_1} \cap \omega(\Sigma_{\gamma_{q_1}})$ be connected. For this to hold, we construct (equivalently, we shrink) the neighborhood $\omega(\Sigma_{\gamma_{q_1}})$ as a union of polydiscs of very small constant radius centered at points of $\Sigma_{\gamma_{q_1}}$. Next, we construct in two parts B_{q_1} as follows. The first part of B_{q_1} consists of a small neighborhood of $A_{q_1,0}(\overline{\Delta})$ in $\mathbb{C}^n$, for instance a union of small polydiscs centered at points of $A_{q_1,0}(\overline{\Delta})$ which are of constant very small radius in order to be contained in $D \cup \Omega$. The second part of B_{q_1} consists of three subparts, namely the union of polydiscs of radius 2δ centered at points of $A_{p_1}(b^-\Delta)$, at points of $A_{p_1}(b^+\Delta) \cap \gamma_{p_1}([-\rho/2, -\rho/4])$ and at points of $A_{p_1}(b^+\Delta) \cap \gamma_{p_1}([\rho/4, \rho/2])$. This part is the same for all B_{q_1}. By Lemma 6.4**(2)**, if δ is small enough, the second part of B_{q_1} will be contained in $D \cup \Omega$. This is how we choose $\delta > 0$ small enough. Moreover, because $A_{p_1}(\overline{\Delta})$ are non-tangentially half-attached to $\Sigma_{\gamma_{p_1}}$ along $b^+\Delta$, the intersection $B_{q_1} \cap \omega(\Sigma_{\gamma_{q_1}})$ is connected. So we get a well defined semi-local holomorphic extension, again denoted by $\psi \in \mathscr{O}(B_{q_1} \cup \omega(\Sigma_{\gamma_{q_1}}))$. Geometrically speaking, this domain $B_{q_1} \cup \omega(\Sigma_{\gamma_{q_1}})$ is a kind of curved Hartogs domain. We claim that such a function ψ extends holomorphically to a neighborhood of the union of disc $A_{q_1,\sigma}(\overline{\Delta})$ for $|\sigma| < \delta$. Indeed, we first observe that for all $|q_1| < \varepsilon$ and $|\sigma| < \delta$, the boundaries $A_{q_1,\sigma}(b\Delta)$ are contained in this domain $B_{q_1} \cup \omega(\Sigma_{\gamma_{q_1}})$. This is evident for the half boundaries $A_{q_1,\sigma}(b^+\Delta)$ which are contained in $\Sigma_{\gamma_{q_1}}$ by Lemma 6.15**(2)**. On the other hand, the boundaries $A_{q_1,\sigma}(b^-\Delta)$ stay within a distance of order say $3\delta/2$ with respect to the boundary $A_{p_1}(b^-\Delta)$, by the very construction of the smooth family $A_{q_1,\sigma}$, which proves the claim. We remind the notion of *analytic isotopy* of analytic discs ([Me2, Definition 3.1]) which is useful in applying the continuity principle. For fixed q_1 and for varying σ, all the discs $A_{q_1,\sigma}$ are analytically isotopic to each other with their boundaries lying in $B_{q_1} \cup \omega(\Sigma_{\gamma_{q_1}})$. Moreover, for $\sigma = 0$, we obviously see that $A_{q_1,0}$ is analytically isotopic to a point in the domain $B_{q_1} \cup \omega(\Sigma_{\gamma_{q_1}})$, just by the trivial isotopy $(r, \zeta) \mapsto A_{q_1,0}(r\,\zeta)$ with values in the neighborhood $\omega(A_{q_1,0}(\overline{\Delta})) \subset B_{q_1}$. By Lemma 3.2 in [Me2], it follows that ψ restricted to a neighborhood of $A_{q_1,\sigma}(b\Delta)$ extends holomorphically to a neighborhood of $A_{q_1,\sigma}(\overline{\Delta})$ in $\mathbb{C}^n$, for all $|\sigma| < \delta$. Furtermore, thanks to the fact that the map $(\zeta, \sigma) \mapsto A_{q_1,\sigma}(\zeta)$ is an embedding, we get a well defined holomorphic extension ψ_{q_1} of ψ to the union $C_{q_1} := \cup_{|\sigma|<\delta} A_{q_1,\sigma}(\Delta \cap \Delta(1, \delta))$. Of course, this extension coincides with the old $\psi \in \mathscr{O}(D \cup \Omega)$ in a neighborhood of the intersection of the half boundary $A_{q_1,0}(b^+\Delta)$ with C_{q_1}. Since $C_{q_1} \cap D$ is connected and since C_{q_1}

contains $\Delta_n(0,\eta)\cap\Sigma^-_{\gamma_{q_1}}$ by Lemma 6.17, after sticking ψ with ψ_{q_1}, we get the desired holomorphic extension $\Psi\in\mathscr{O}(D\cup[\Delta_n(0,\eta)\cap\Sigma^-_{\gamma_{q_1}}])$. The proof of Lemma 6.20 is complete. $\square$

§7. Holomorphic extension to a Levi-flat union of Segre varieties

7.1. Straightenings. For each parameter q_1', we consider the real analytic arc $\gamma'_{q_1'}$ defined by (6.2). To this family of analytic arcs we can associate a family of straightened coordinates as follows.

Lemma 7.2. *For varying $q_1'\in M'$ with $|q_1'|<\varepsilon'<<\rho'$, there exists a real analytically parameterized family of biholomorphic mappings $\Phi'_{q_1'}$ of $\Delta_n(0,\rho'/2)$ sending q_1' to the origin and straightening $\gamma'_{q_1'}$ to the u'-axis, such that the image $M'_{q_1'}:=\Phi_{q_1'}(M')$ is a closed real analytic hypersurface of $\Delta_n(0,\rho'/2)$ close to M' in the real analytic norm which is given by an equation of the form $\bar w'=\Theta'_{q_1'}(\bar z',t')$, with $\Theta'_{q_1'}(\bar z',t')$ converging normally in the polydisc $\Delta_{2n-1}(0,\rho'/2)$ and satisfying $\Theta'_{q_1'}(0,0,w')\equiv w'$ and $\Theta'_{q_1'}(\bar z',t')=w'+\mathrm{O}(2)$.*

7.3. Different reflection functions. Let us develope these defining equations in the form:

$$\bar w'=\Theta'_{q_1'}(\bar z',t')=\sum_{\beta\in\mathbb{N}^{n-1}}(\bar z')^\beta\,\Theta'_{q_1',\beta}(t'). \tag{7.4}$$

Here, $\Theta_{q_1',0}(0,w')\equiv w'$. We denote by $h_{q_1'}=(f_{q_1'},g_{q_1'})$ the mapping in these coordinate systems. To every such system of coordinates, we associate *different reflection functions* by setting:

$$\mathscr{R}'_{q_1',h_{q_1'}}(t,\bar\nu'):=\bar\mu'-\sum_{\beta\in\mathbb{N}^{n-1}}\bar\lambda'^\beta\,\Theta'_{q_1',\beta}(h_{q_1'}(t)). \tag{7.5}$$

7.6. Holomorphic extension to a Levi-flat hat. Recall from §6.5 that the Levi-flat hypersurfaces $\Sigma_{\gamma_{q_1}}$ are defined to be the union of the Segre varieties $S_{\bar q}$ associated to points q varying in γ_{q_1}, intersected with the polydisc $\Delta_n(0,\rho/3)$. Here, we establish our main crucial observation.

Lemma 7.7. *If q_1 with $|q_1|<\varepsilon$ belongs to M_1^-, then all the components $\Theta'_{q_1',\beta}(h(t))$ extend as CR functions of class $\mathscr{C}^\infty$ over $\Sigma_{\gamma_{q_1}}\cap\Delta_n(0,\rho/3)$.*

Proof. Let $\overline{L}_1,\dots,\overline{L}_{n-1}$ be the commuting basis of $T^{0,1}M$ given by $\overline{L}_j=\frac{\partial}{\partial\bar z_j}+\Theta_{\bar z_j}(\bar z,t)\frac{\partial}{\partial\bar w}$, for $1\le j\le n-1$. Clearly, the coefficients of these vectors fields converge normally in the polydisc $\Delta_{2n-1}(0,\rho)$. By the diffeomorphism assumption, we have $\det(\overline{L}_j\,\overline{f_{q_1',k}}(0))_{1\le j,k\le n-1}\neq 0$. At points $(t,\bar t)$ with $t\in M\cap\Delta_n(0,\rho/3)$, we shall denote this determinant by:

$$\det\,(\overline{L}_j\,\overline{f_{q_1',k}}(\bar t))_{1\le j,k\le n-1}:=\underline{\mathscr{D}}(t,\bar t,\{\partial_{\bar t_l}\overline{f_{q_1',k}}(\bar t)\}_{1\le l\le n,\,1\le k\le n-1}). \tag{7.8}$$

Here, by its very definition, the function $\underline{\mathscr{D}}$ is holomorphic in its variables. Replacing w by $\overline{\Theta}(z,\bar{t})$ in $\underline{\mathscr{D}}$, we can write $\underline{\mathscr{D}}$ in the form $\mathscr{D}(z,\bar{t},\{\partial_{\bar{t}_l}\overline{f_{q_1',k}}(\bar{t})\}_{1\leq l\leq n,\,1\leq k\leq n-1})$, where $\mathscr{D}$ is holomorphic in its variables. Shrinking $\rho>0$ if necessary, we may assume that for all fixed point $\bar{t}_q\in M$ with $|\bar{t}_q|<\rho/3$, then:

(1) *The polarization* $\mathscr{D}(z,\bar{t}_q,\{\partial_{\bar{t}_l}\overline{f_{q_1',k}}(\bar{t}_q)\}_{1\leq l\leq n,\,1\leq k\leq n-1})$ *is convergent on the Segre variety* $S_{\bar{t}_q}\cap\Delta_n(0,\rho/3)=\{(z,w)\in\Delta_n(0,\rho/3):w=\overline{\Theta}(z,\bar{t}_q)\}$*, i.e. it is convergent with respect to* $z\in\mathbb{C}^{n-1}$ *for all* $|z|<\rho/3$.

(2) *This expression* $\mathscr{D}(z,\bar{t}_q,\{\partial_{\bar{t}_l}\overline{f_{q_1',k}}(\bar{t}_q)\}_{1\leq l\leq n,\,1\leq k\leq n-1})$ *does* not *vanish at any point of the Segre variety* $S_{\bar{t}_q}\cap\Delta_n(0,\rho/3)$*, i.e. it does not vanish for all* $|z|<\rho/3$.

Let us choose q_1' satisfying $\gamma_{q_1'}'\subset M_1'^{-}$, with $|q_1'|<\varepsilon'$. We pick the corresponding parameter $q_1:=h^{-1}(q_1')$ with $|q_1|<\varepsilon$. By the choice of $\Phi_{q_1'}'$, we then have $f_{q_1'}(\gamma_{q_1}(s))=0$ for all $s\in\mathbb{R}$ with $|s|\leq\rho/2$. *This property will be really crucial*. As the mapping $h_{q_1'}$ is of class $\mathscr{C}^\infty$ over M, we can apply the tangential Cauchy-Riemann derivations $\overline{L}_1^{\beta_1}\cdots\overline{L}_{n-1}^{\beta_{n-1}}$, $\beta\in\mathbb{N}^{n-1}$ of order $|\beta|$ infinitely many times to the identity:

$$\overline{g_{q_1'}(t)}=\Theta_{q_1'}'(\overline{f_{q_1'}(t)},h_{q_1'}(t)). \tag{7.9}$$

which holds for $t\in M\cap\Delta_n(0,\rho)$. To begin with, we first apply the CR derivations $\overline{L}_j$ to this identity (7.9). This yields

$$\overline{L}_j\,\overline{g_{q_1'}}(\bar{t})=\sum_{k=1}^{n-1}\overline{L}_j\,\overline{f_{q_1',k}}(\bar{t})\,\frac{\partial\Theta_{q_1'}'}{\partial\bar{z}_k'}\,(\overline{f_{q_1'}}(\bar{t}),h_{q_1'}(t)). \tag{7.10}$$

Applying Cramer's rule as in the proofs of Lemmas 3.22 and 4.7, we see that there exist holomorphic functions $\mathscr{T}_k$ in their arguments such that

$$\frac{\partial\Theta_{q_1'}'}{\partial\bar{z}_k'}(\overline{f_{q_1'}(t)},h_{q_1'}(t))=\frac{\mathscr{T}_k(z,\bar{t},\{\partial_{\bar{t}_l}\overline{h_{q_1',j}}(\bar{t})\}_{1\leq l,j\leq n})}{\mathscr{D}(z,\bar{t},\{\partial_{\bar{t}_l}\overline{f_{q_1',k}}(\bar{t})\}_{1\leq l\leq n,\,1\leq k\leq n-1})}. \tag{7.11}$$

By CR differentiating further the identities (7.11), using Cramer's rule at each step and making inductive arguments, it follows that for every multi-index $\beta\in\mathbb{N}_*^{n-1}$, there exist holomorphic functions $\mathscr{T}_\beta$ in their variables such that

$$\begin{cases}\Theta_{q_1',\beta}'(h_{q_1'}(t))+\displaystyle\sum_{\gamma\in\mathbb{N}_*^{n-1}}(\overline{f_{q_1'}(t)})^\gamma\,\Theta_{q_1',\beta+\gamma}'(h_{q_1'}(t))\,\frac{(\beta+\gamma)!}{\beta!\,\gamma!}=\\ \qquad\qquad=\dfrac{\mathscr{T}_\beta(z,\bar{t},\{\partial_{\bar{t}}^\gamma\overline{h_{q_1',j}}(\bar{t})\}_{1\leq j\leq n,\,|\gamma|\leq|\beta|})}{[\mathscr{D}(z,\bar{t},\{\partial_{\bar{t}_l}\overline{f_{q_1',k}}(\bar{t})\}_{1\leq l\leq n,\,1\leq k\leq n-1})]^{2|\beta|-1}}.\end{cases} \tag{7.12}$$

Precisely, the terms $\mathscr{T}_\beta$ are holomorphic with respect to $(z,\bar{t})$ and relatively polynomial with respect to the jets $\{\partial_{\bar{t}}^\gamma\overline{h_{q_1',j}}(\bar{t})\}_{1\leq j\leq n,\,|\gamma|\leq|\beta|}$. Also, the variable t runs in M in a neighborhood of $\gamma_{q_1}(s)$. Now, we remind that by

Lemma 5.10, all the functions $t \mapsto \Theta'_{q'_1,\beta}(h_{q'_1,\beta}(t))$ are already holomorphically extendable to a neighborhood of γ_{q_1} in $\mathbb{C}^n$, since $\gamma_{q_1} \subset M_1^-$. Let us denote by $\theta'_{q'_1,\beta}(t)$ these holomorphic extensions. We shall first prove Lemma 7.7 in the simpler case where M' is holomorphically nondegenerate, in which case the mapping h in fact extends holomorphically to a neighborhood of M_1^- in $\mathbb{C}^n$. In this case, for every point $q \in \gamma_{q_1}$ of the form $q = \gamma_{q_1}(s)$, the terms in the right hand side of (7.12) extend holomorphically to a neighborhood $(q, \bar{q})$ of the complexification $\mathscr{M}$ of M, which is the complex hypersurface in $\mathbb{C}^n \times \mathbb{C}^n$ given by the defining equation $w = \overline{\Theta}(z, \tau)$. So, for (t, τ) close to $(q, \bar{q})$, we can complexify (7.12), replacing $\bar{t}$ by τ and t by $(z, \overline{\Theta}(z, \tau))$, which yields an identity between holomorphic functions:

(7.13)
$$\begin{cases} \Theta'_{q'_1,\beta}(h_{q'_1}(z, \overline{\Theta}(z,\tau))) + \displaystyle\sum_{\gamma \in \mathbb{N}_*^{n-1}} (\overline{f_{q'_1}}(\tau))^\gamma \, \Theta'_{q'_1,\beta+\gamma}(h_{q'_1}(z, \overline{\Theta}(z,\tau))) \, \frac{(\beta+\gamma)!}{\beta! \, \gamma!} \equiv \\ \qquad \equiv \dfrac{\mathscr{T}_\beta(z, \tau, \{\partial_\tau^\gamma \overline{h_{q'_1,j}}(\tau)\}_{1 \le j \le n, \, |\gamma| \le |\beta|})}{[\mathscr{D}(z, \tau, \{\partial_{\tau_l} \overline{f_{q'_1,k}}(\tau)\}_{1 \le l \le n, \, 1 \le k \le n-1})]^{2|\beta|-1}}. \end{cases}$$

Next, we put $\tau := \bar{t}_q = \overline{\gamma_{q_1}(s)}$, whence t belongs to the Segre variety $S_{\bar{q}}$, namely $t = (z, \overline{\Theta}(z, \bar{t}_q))$, where the variable z is free. From the important fact that $\overline{f_{q'_1}}(\bar{t}_q) = 0$, because $h(q)$ belongs to $\gamma'_{q'_1}$, it follows that *the queue sum* $\sum_{\gamma \in \mathbb{N}_*^{n-1}}$ *in (7.13) disappears*. Consequently, we get the following identity on $S_{\bar{q}}$ for z close to z_q:

(7.14)
$$\Theta'_{q'_1,\beta}(h_{q'_1}(z, \overline{\Theta}(z, \bar{t}_q))) \equiv \frac{\mathscr{T}_\beta(z, \bar{t}_q, \{\partial_{\bar{t}}^\gamma \overline{h_{q'_1,j}}(\bar{t}_q)\}_{1 \le j \le n, \, |\gamma| \le |\beta|})}{[\mathscr{D}(z, \bar{t}, \{\partial_{\bar{t}_l} \overline{f_{q'_1,k}}(\bar{t}_q)\}_{1 \le l \le n, \, 1 \le k \le n-1})]^{2|\beta|-1}}.$$

The crucial observation now is that the right hand side of (7.14) converges over a much longer part of the Segre variety $S_{\bar{q}}$. Indeed, by **(1)** after (7.8), it converges for $|z| < \rho/3$. Furthermore, the right hand side of (7.14) varies in a $\mathscr{C}^\infty$ way when $\bar{t}_q$ varies on γ_{q_1}. This proves Lemma 7.7 in the case where h extends holomorphically to a neighborhood of M_1^- in $\mathbb{C}^n$, which holds true for instance when M' is holomorphically nondegenerate.

In the general case, it is no longer true that h extends holomorphically to a neighborhood of M_1^- in $\mathbb{C}^n$, so different arguments are required. Let $q \in \gamma_{q_1}$ be arbitrary. By assumption, the components $\Theta'_{q'_1,\beta}(h_{q'_1}(t))$ extend holomorphically to a neighborhood of q in $\mathbb{C}^n$ as holomorphic functions $\theta'_{q'_1,\beta}(t)$ defined, say in the polydisc $\{|t - t_q| < \sigma_q\}$, for small $\sigma_q > 0$. By expanding $h_{q'_1}$ in formal power series at q, we get a series $H_{q'_1}(t_q + (t - t_q)) \in \mathbb{C}[\![t - t_q]\!]^n$. Also, we may expand $\theta'_{q'_1,\beta}(t_q + (t - t_q)) \in \mathbb{C}\{t - t_q\}$. Then we have the following formal power series identities

$$\Theta_{q'_1,\beta}(H_{q'_1}(t_q + (t - t_q))) \equiv \theta_{q'_1,\beta}(t_q + (t - t_q)) \tag{7.15}$$

in $\mathbb{C}[\![t-t_q]\!]$ for all β. Since the Taylor series of $(h_{q_1'}, \overline{h_{q_1'}})$ at $(t_q, \bar{t}_q)$ induces a formal CR mapping between the complexifications $\mathscr{M}$ centered at $(q, \bar{q})$ and the complexification $\mathscr{M}'$ centered at $(q', \bar{q}')$, it follows that we can write the following formal power series identities valuable in $\mathbb{C}[\![t-t_q, \tau-\bar{t}_q]\!]$ for $(t_q+(t-t_q), \bar{t}_q+(\tau-\bar{t}_q))$ in $\mathscr{M}$:

(7.16)
$$\begin{cases} \Theta'_{q_1',\beta}(H_{q_1'}(t_q+(t-t_q)))+ \\ + \displaystyle\sum_{\gamma\in\mathbb{N}_*^{n-1}} \Theta'_{q_1',\beta+\gamma}(H_{q_1'}(t_q+(t-t_q))\,\overline{F_{q_1'}}(\bar{t}_q+(\tau-\bar{t}_q))^\gamma \equiv \\ \equiv \dfrac{\mathscr{T}_\beta(z_q+(z-z_q), \bar{t}_q+\tau-\bar{t}_q, \{\partial_\tau^\gamma \overline{H_{q_1',j}}(\bar{t}_q+(\tau-\bar{t}_q))\}_{1\leq j\leq n,\,|\gamma|\leq|\beta|})}{[\mathscr{D}(z_q+(z-z_q), \bar{t}_q+(\tau-\bar{t}_q), \{\partial_{\tau_l}\overline{F_{q_1',k}}(\bar{t}_q+(\tau-\bar{t}_q))\}_{1\leq l\leq n,\,1\leq k\leq n-1})]^{2|\beta|-1}}. \end{cases}$$

Putting $\tau := \bar{t}_q$ in (7.16), taking (7.15) into account, and using the important fact that $\overline{F_{q_1'}}(\bar{t}_q)=0$, we get the formal power series identities between two holomorphic functions which are valuable for $|z-z_q|<\sigma_q$ in $\mathbb{C}\{z-z_q\}$ and for all β:

$$\text{(7.17)}\quad \begin{cases} \theta'_{q_1',\beta}(z_q+(z-z_q), \overline{\Theta}(z_q+(z-z_q), \bar{t}_q)) \equiv \\ \equiv \dfrac{\mathscr{T}_\beta(z_q+(z-z_q), \bar{t}_q, \{\partial_{\bar{t}}^\gamma \overline{h_{q_1',j}}(\bar{t}_q)\}_{1\leq j\leq n,\,|\gamma|\leq|\beta|})}{[\mathscr{D}(z_q+(z-z_q), \bar{t}_q, \{\partial_{\bar{t}_l}\overline{f_{q_1',k}}(\bar{t}_q)\}_{1\leq l\leq n,\,1\leq k\leq n-1})]^{2|\beta|-1}}. \end{cases}$$

Consequently, we get on $S_{\bar{q}}$ the following identities between holomorphic functions of z valuable for $|z-z_q|<\sigma_q$ and for all β:

$$\text{(7.18)}\quad \theta'_{q_1',\beta}(z, \overline{\Theta}(z, \bar{t}_q)) \equiv \frac{\mathscr{T}_\beta(z, \bar{t}_q, \{\partial_{\bar{t}}^\gamma \overline{h_{q_1',j}}(\bar{t}_q)\}_{1\leq j\leq n,\,|\gamma|\leq|\beta|})}{[\mathscr{D}(z, \bar{t}_q, \{\partial_{\bar{t}_l}\overline{f_{q_1',k}}(\bar{t}_q)\}_{1\leq l\leq n,\,1\leq k\leq n-1})]^{2|\beta|-1}}.$$

As in the holomorphically nondegenerate case, we see that the right hand side of (7.18) converges for $|z|<\rho/3$, so the holomorphic functions $\theta'_{q_1',\beta}(z, \overline{\Theta}(z, \bar{t}_q))$ converge in a long piece of the Segre variety $S_{\bar{q}}$. The $\mathscr{C}^\infty$-smoothness of the right hand side extension over $\Sigma_{\gamma_{q_1}} \cap \Delta_n(0, \rho/3)$ yields a CR extension to $\Sigma_{\gamma_{q_1}}$ which is of class $\mathscr{C}^\infty$. This completes the proof of Lemma 7.7. □

Lemma 7.19. *If q_1 with $|q_1|<\varepsilon$ belongs to M_1^-, then all the components $\Theta'_{q_1',\beta}(h_{q_1'}(t))$ of the reflection function $\mathscr{R}_{q_1',h_{q_1'}}$ extend as holomorphic functions to a neighborhood $\omega(\Sigma_{\gamma_{q_1}})$ of $\Sigma_{\gamma_{q_1}}$ in $\mathbb{C}^n$.*

Proof. By the hypotheses of Theorem 5.5 and by Lemma 5.10, we remind the reader that the components $\Theta'_{q_1',\beta}(h_{q_1'}(t))$ already extend holomorphically to a neighborhood $\omega(\gamma_{q_1}) \subset \Omega$ of $\gamma_{q_1} \subset M_1^-$ in $\mathbb{C}^n$ as the holomorphic functions $\theta'_{q_1',\beta}(t)$. Thanks to Lemma 7.7, the statement follows by an application of the following known propagation result: □

Lemma 7.20. *Let Σ be a $\mathscr{C}^\infty$-smooth Levi-flat hypersurface in $\mathbb{C}^n$ $(n \geq 2)$ foliated by complex hypersurfaces $\mathscr{F}_\Sigma$. If a continuous CR function ψ defined on Σ extends holomorphically to a neighborhood $\mathscr{U}_p$ of a point p belonging to a leaf $\mathscr{F}_\Sigma$ of Σ, then ψ extends holomorphically to a neighborhood $\omega(\mathscr{F}_\Sigma)$ of $\mathscr{F}_\Sigma$ in $\mathbb{C}^n$. The size of this neighborhood $\omega(\mathscr{F}_\Sigma)$ depends on the size of $\mathscr{U}_p$ and is stable under sufficiently small (even non-Levi-flat) perturbations of Σ.*

Proof. The first part of this statement was first proved by Hanges and Treves ([HaTr]) using microlocal concepts, the FBI transform and controlled deformations of manifolds. Interesting generalizations were given by Sjöstrand and by Trépreau ([Tr2]) in arbitrary codimension. Another proof using deformations of analytic discs has been provided by Tumanov ([Tu2]). Both proofs are constructive and the second statement about the size of the neighborhoods to which extension holds follows after a careful inspection of the techniques therein. Since it is superfluous to repeat the arguments word by word, we do not enter the details. □

§8. Relative position of the neighbouring Segre varieties

8.1. Intersection of Segre varieties. We are now in position to complete the proof of Theorem 5.5, hence to achieve the proof of Theorem 1.9. It remains to show that the functions $\Theta'_{q'_1,\beta}$ extend holomorphically at p_1, for γ_{q_1} chosen conveniently. For this choice, we are led to the following dichotomy: either $S_{\bar{p}_1} \cap M_1^- = \emptyset$ in a sufficiently small neighborhood of p_1 or there exists a sequence $(q_k)_{k\in\mathbb{N}}$ of points of $S_{\bar{p}_1} \cap M_1^-$ tending towards p_1. In the first case, we shall distinguish two sub-cases. Either $S_{\bar{p}_1}$ lies below M_1^- or it lies above M_1^-. Let us write this more precisely. We may choose a $\mathscr{C}^\infty$-smooth hypersurface H_1 transverse to M at p_1 with H_1 satisfying $H_1 \cap M = M_1$ and $H_1^- \cap M = M_1^-$ (*see* FIGURE 7). Thus H_1 together with M divides $\mathbb{C}^n$ near 0 in four connected parts. More precisely, we say that either $S_{\bar{p}_1} \cap H_1^-$ is contained in the lower left quadrant $H_1^- \cap M^- = H_1^- \cap D$ or it is contained in the upper left quadrant $H_1^- \cap M^+$. To summarize, we have distinguished three possible cases:

Case I. The half Segre variety $S_{\bar{p}_1} \cap H_1^-$ cuts M_1^- along an infinite sequence of points $(q_k)_{k\in\mathbb{N}}$ tending towards p_1.

Case II. The half Segre variety $S_{\bar{p}_1} \cap H_1^-$ does not intersect M_1^- in a neighborhood of p_1 and it passes under M_1^-, namely inside D.

Case III. The half Segre variety $S_{\bar{p}_1} \cap H_1^-$ does not intersect M_1^- in a neighborhood of p_1 and it passes over M_1^-, namely over $D \cup M_1^-$.

In the first two cases, for every point q_1 close enough to p_1, the Segre variety $S_{\bar{q}_1}$ will intersect $D \cup \Omega$ and the neighborhoods $\omega(\Sigma_{\gamma_{q_1}})$ constructed in Lemma 7.20 will always contain the point p_1 (we give more arguments below). The third case could be *a priori* the most delicate one. But we can already delineate the following crucial geometric property, which says that Lemma 6.20 will apply.

Lemma 8.2. *If $S_{\bar{p}_1} \cap H_1^-$ is contained in M^+, then p_1 lies in the lower side $\Sigma^-_{\gamma_{q_1}}$ for every arc $\gamma_{q_1} \subset M_1^-$ of the family* (6.2)*.*

Proof. In normal coordinates t vanishing at p_1, the real equation of M is given by $v = \varphi(z, \bar{z}, u)$, where φ is a certain converging real power series satisfying $\varphi(0) = 0$, $d\varphi(0) = 0$ and $\varphi(z, 0, u) \equiv 0$. We can assume that $dh(0) = \mathrm{Id}$. We can assume that the "minus" side $D \equiv M^-$ of automatic extension of CR functions is given by $\{v < \varphi(z, \bar{z}, u)\}$. Replacing u by $(w + \bar{w})/2$ and v by $(w - \bar{w})/2i$, and solving with respect to w, we get for M an equation as above, say $w = \bar{w} + i\,\overline{\Xi}(z, \bar{t})$, with $\overline{\Xi}(0, \bar{t}) \equiv 0$. We have $\overline{\Theta}(z, \bar{t}) \equiv \bar{w} + i\,\overline{\Xi}(z, \bar{t})$ in our previous notation. We claim that every such arc $\gamma_{q_1} \subset M_1^-$ contains a point $p \in M_1^-$ whose coordinates are of the form $(z_p, 0 + i\varphi(z_p, \bar{z}_p, 0))$. Indeed, by construction, the arcs γ_{q_1} are all elongated along the u-coordinate axis, since it is so for $\gamma'_{q'_1}$ and since $dh(0) = \mathrm{Id}$. In normal coordinates, the Segre variety $S_{\bar{p}_1}$ passing through the origin p_1 has the simple equation $\{w = 0\}$. By assumption, the point $(z_p, 0) \in S_{\bar{p}_1}$ lies over M in M^+, so we have $\varphi(z_p, \bar{z}_p, 0) < 0$. Then the Segre variety $S_{\bar{p}}$ (which is a leaf of $\Sigma_{\gamma_{q_1}}$), has the equation $w = -i\varphi(z_p, \bar{z}_p, 0) + i\,\overline{\Xi}(z, \bar{z}_p, -i\varphi(z_p, \bar{z}_p, 0))$. Therefore, the intersection point $\{z = 0\} \cap S_{\bar{p}} \subset \Sigma_{\gamma_{q_1}}$ has coordinates equal to $(0, -i\varphi(z_p, \bar{z}_p, 0))$. This point clearly lies above the origin p_1, so p_1 lies in the lower side $\Sigma^-_{\gamma_{q_1}}$, which completes the proof of Lemma 8.2. $\square$

8.3. Extension across $(M, 0)$ of the components $\Theta'_{q'_1,\beta}$. We are now prepared to complete the proof of Theorems 5.5 and 1.9. We first choose δ, η, ε and various points $|q_1| < \varepsilon$ as in Lemma 6.20 and we consider the two associated arcs γ_{q_1} and $\gamma'_{q'_1}$, the associated mapping $h_{q'_1}$ and the associated reflection function $\mathscr{R}'_{q'_1,h_{q'_1}}$. By Lemma 6.20, for each such choice of q_1, then all the components $\Theta'_{q'_1,\beta}$ extend holomorphically to $D \cup [\Sigma^-_{\gamma_{q_1}} \cap \Delta_n(0, \eta)]$. Our goal is to show that for suitably chosen γ_{q_1} in Cases I, II and III, then the components $\Theta'_{q'_1,\beta}$ extend holomorphically to a neighborhood of p_1. Afterwards, thanks to Artin's approximation theorem, the Cauchy estimates are automatic, as explained in Lemma 3.16.

8.4. Case I. In Case I, we choose one of the points $q_k \in M_1^- \cap S_{\bar{p}_1}$ which is arbitrarily close to p_1 and we denote it simply by q_1. We can assume that $|q_1| < \varepsilon$. Next, we consider the associated arc γ_{q_1}. By an application of Lemma 7.19, all the components $\Theta'_{q'_1,\beta}(h_{q'_1}(t))$ of the reflection function $\mathscr{R}_{q'_1,h_{q'_1}}$ extend holomorphically to a neighborhood $\omega(\Sigma_{\gamma_{q_1}})$ of $\Sigma_{\gamma_{q_1}}$ in $\mathbb{C}^n$. Of course, this neighborhood contains the point $p_1 \in S_{\bar{q}_1} \subset \Sigma_{\gamma_{q_1}}$. However, because of possible pluridromy, the extension at p_1 might well differ from the extension in the one-sided neighborhood D near p_1. Fortunately, thanks to Lemma 6.20, all these holomorphic functions extend holomorphically in a unique way to $D \cup [\Sigma^-_{\gamma_{q_1}} \cap \Delta_n(0, \eta)]$. The neighborhood $\omega(\Sigma_{\gamma_{q_1}})$ being

constructed as a certain union of polydiscs of small radius, it is geometrically smooth, so its intersection with $D \cup [\Sigma^-_{\gamma_{q_1}} \cap \Delta_n(0,\eta)]$ is connected. In sum, we get unique holomorphic extensions of the functions $\Theta'_{q'_1,\beta}(h_{q'_1}(t))$ to the domain

$$\omega(\Sigma_{\gamma_{q_1}}) \ \cup \ D \ \cup \ [\Sigma^-_{\gamma_{q_1}} \cap \Delta_n(0,\eta)], \tag{8.5}$$

which yields the desired holomorphic extensions at p_1. Case I is achieved.

8.6. Case II. Case II is treated almost the same way as Case I. Since $S_{\bar{p}_1} \cap H_1^-$ is contained in D, we can choose a fixed point $\tilde{q}$ of $S_{\bar{p}_1}$ which belongs to D. So there exists a radius $\tilde{\rho} > 0$ such that the polydisc $\Delta_n(\tilde{q},\tilde{\rho})$ is contained in D. For $|q_1| < \varepsilon$ sufficiently close to p_1, there exists a point $\tilde{q}_1 \in S_{\bar{q}_1}$ sufficiently close to $\tilde{q}$ such that the polydisc $\Delta_n(\tilde{q}_1,\tilde{\rho}/2)$ is again contained in D. Thanks to Lemma 7.20, if q_1 is sufficiently close to p_1, the neighborhood $\omega(\Sigma_{\gamma_{q_1}})$ constructed by deformations of analytic discs as in [Tu2] will contain the point p_1, since its size along $S_{\bar{q}_1}$ depends only on the fixed size of the polydisc $\Delta_n(\tilde{q}_1,\tilde{\rho}/2)$ which is of radius at least $\tilde{\rho}/2$ uniformly. Finally, as in Case I, the monodromy of the extension follows by an application of Lemma 6.20.

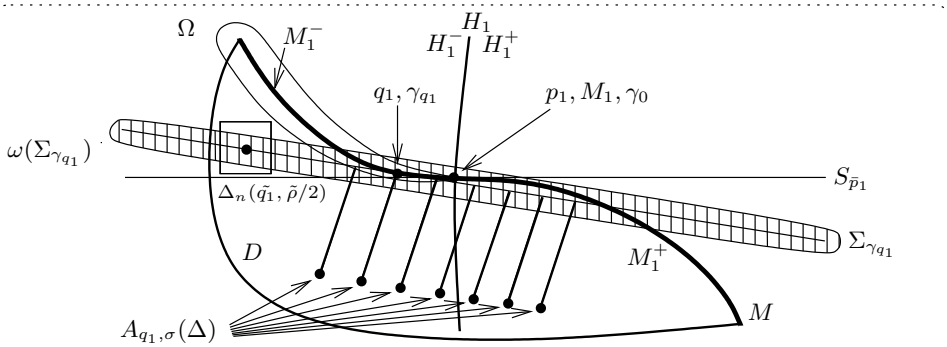

FIGURE 7: THE SEGRE VARIETY $S_{\bar{p}_1}$ INTERSECTS D LEFT TO H_1 NEAR p_1

8.7. Case III. For Case III, thanks to Lemma 8.2, we know already that p_1 belongs to the lower side $\Sigma^-_{\gamma_{q_1}}$. Thus Case III follows immediately from the application of Lemma 6.20 summarized in §8.3 above. Case III is achieved. The proofs of Theorems 5.5, 1.9 and 1.2 are complete. □

§9. ANALYTICITY OF SOME DEGENERATE $\mathscr{C}^\infty$-SMOOTH CR MAPPINGS

9.1. Presentation of the results. Theorems 1.9 and 1.14 are concerned with $\mathscr{C}^\infty$-smooth CR *diffeomorphisms*. It is desirable to remove the diffeomorphism assumption. Taking inspiration from the very deep article of Pinchuk [P4], we have been successful in establishing the following statement. We refer the reader to the work of Diederich-Fornæss [DF1] and to

the book of D'Angelo [D'A] for fundamentals about complex curves contained in real analytic hypersurfaces.

Theorem 9.2. *Let $h : M \to M'$ be a $\mathscr{C}^\infty$-smooth CR mapping between two connected real analytic hypersurfaces in $\mathbb{C}^n$ $(n \geq 2)$. If M and M' do not contain any complex curve, then h is real analytic at* every *point of M.*

At first, we need to recall some known facts about the local CR geometry of real analytic hypersurfaces.

(1) If M does not contain complex curves, it is essentially finite. This is obvious, because the coincidence loci of Segre varieties are complex analytic subsets which are *contained* in M (*cf.* [DP1,2]).

(2) If M is essentially finite at every point, it is locally minimal at every point, so it consists of a single CR orbit, namely it is globally minimal. As we have seen in §3.6 above, CR functions on M (and in particular the components of h) extend holomorphically to a global one-sided neighborhood D of M in $\mathbb{C}^n$.

(3) If M does not contain complex curves, then M is Levi nondegenerate at each point of the complement of some proper closed real analytic subset of M. On the contrary, the everywhere Levi degenerate CR manifolds are locally regularly foliated by complex leaves of dimension equal to the dimension of the kernel the Levi form, at points where this kernel is of maximal hence locally constant dimension. This may happen in the class of essentially finite hypersurfaces.

(4) If M does not contain complex curves, then either h is constant or it is of real generic rank $(2n-1)$ over an open dense subset of M and its holomorphic extension is of complex generic rank n over D. This is easily established by looking at a point where h is of maximal, hence locally constant, rank.

(5) In Theorem 9.2, there exists at least an everywhere dense open subset U_M of M such that h is real analytic at every point of U_M.

Based on these observations, Theorem 9.2 will be implied by the following more general statement to which the remainder of §9 is devoted.

Theorem 9.3. *Let $h : M \to M'$ be a $\mathscr{C}^\infty$-smooth CR mapping between two connected real analytic hypersurfaces in $\mathbb{C}^n$ $(n \geq 2)$. If M and M' are essentially finite at* every *point and if the maximal generic real rank of h over M is equal to $(2n-1)$, then h is real analytic at* every *point of M.*

In [BJT], [BR1], [BR2], an apparently similar result is proved. In these articles, it is always assumed at least that the formal Taylor series of h at every point of M has Jacobian determinant not identically zero. It follows that all the results proved in these papers are superseded by the unification provided in the recent articles [CPS1,2] and [Da2] expressed in terms of the characteristic variety (1.4). However, the difficult problem would be to treat

the points of M where *nothing* is *a priori* known about the behavior of h, for instance points where all the h_j could vanish to infinite order hence have an identically zero formal Taylor series. In this case, of course, the characteristic variety is positive-dimensional. Unless M is strongly pseudoconvex or there exist local peak functions, it seems impossible to show *ab initio* that h is not flat at every point of M. Thus the strategy of working *only at one fixed "center point" of* M might well necessarily fail (*cf.* [BJT], [BR1,2,4], [BER1,2,3]). On the contrary, a strategy of propagation from nearby points as developed in [P3,4], [DFY], [DP1,2], [Sha], [V], [PV] (and also in the previous paragraphs) is really adequate. Philosophically speaking, there is no real surprise here, because the propagation along Segre varieties is a natural generalization of the weierstrassian conception of analytic continuation.

9.4. Dense holomorphic extension. Let D be a global one-sided neighborhood of M in $\mathbb{C}^n$ to which CR functions extend holomorphically. It follows from the assumptions of Theorem 9.3 that the generic complex rank of h in D equals n. Recall that the two everywhere essentially finite hypersurfaces M and M' are of course holomorphically nondegenerate, namely $\chi_M = n$ and $\chi'_{M'} = n$. At first, we prove the following lemma. Recall that the intrinsic exceptional locus E_M defined in §3.47 is a proper real analytic subset of M. Let U_M denote the open subset consisting of points $p \in M \backslash E_M$ at which the real rank of h equals $(2n-1)$.

Lemma 9.5. *The open subset U_M is dense in M.*

Proof. Indeed, suppose on the contrary that $M \backslash U_M$ contains an open set V. Then the rank of h is strictly less than $(2n-1)$ over V. By the principle of analytic continuation and by the boundary uniqueness theorem, it follows that h is of generic complex rank strictly less than n in the domain D, contradiction. $\square$

Lemma 9.6. *The mapping h extends holomorphically to a neighborhood of every point $p \in U_M$.*

Proof. Indeed, at such a point $p \in U_M$, h is a local CR diffeomorphism of class $\mathscr{C}^\infty$. By Lemma 4.3, the image $p' := h(p)$ of p belongs to $M' \backslash E'_{M'}$. Then Lemma 4.11 applies directly (with $\chi'_{M'} = n$ of course) to show that h extends holomorphically at p. $\square$

9.7. Holomorphic and formal mappings of essentially finite hypersurfaces. Let $h : M \to M'$ be as in the a hypotheses of Theorem 9.3. Let $p \in M$ and let $p' := h(p)$. Let t be coordinates vanishing at p and let as usual a complex equation for the extrinsic complexification $\mathscr{M}$ of M be of the form $w = \overline{\Theta}(z, \zeta, \xi)$, where $t = (z, w) \in \mathbb{C}^{n-1} \times \mathbb{C}$ and $\tau = (\zeta, \xi) \in \mathbb{C}^{n-1} \times \mathbb{C}$. Similarly, let $w' = \overline{\Theta}'(z', \zeta', \xi')$ be an equation of $\mathscr{M}'$. As in the proof of Lemma 4.3, the $\mathscr{C}^\infty$-smooth CR mapping h induces a formal CR mapping $(H(t), \overline{H}(\tau))$ between $(\mathscr{M}, (p, \bar{p}))$ and $(\mathscr{M}', (p', \overline{p'}))$.

Precisely, this means that the Taylor series $H_j(t) = \sum_{\gamma \in \mathbb{N}^n} H_{j,\gamma}\, t^\gamma$ of h_j at the origin and there conjugates $\overline{H}(\tau)$ satisfy a formal power series identity of the form

$$G(t) - \overline{\Theta}'(F(t), \overline{F}(\tau), \overline{G}(\tau)) \equiv A(t,\tau)\ \left[w - \overline{\Theta}(z,\zeta,\xi)\right], \tag{9.8}$$

where we denote $H = (F_1, \dots, F_{n-1}, G)$ and where $A(t,\tau)$ is a formal power series. Without loss of generality, we can assume that the coordinates (z,w) and (z',w') are normal, namely the defining functions satisfy $\overline{\Theta}(0,\zeta,\xi) \equiv \overline{\Theta}(z,0,\xi) \equiv \xi$ and *idem* for $\overline{\Theta}'$. Such coordinates are not unique, but they specify a certain component $H_n = G$ of the formal CR mapping H which is called a *transversal component*. In [BR2], two facts about formal CR mappings between small local pieces of real analytic hypersurfaces (and even between *formal* hypersurfaces) are established. Recall that M and M' are assumed to be essentially finite at the origin and that the coordinates are normal.

1. If the transversal power series G does not vanish identically, then H is of *finite multiplicity*, namely (*cf.* [BR88]), the ideal generated by the power series $F_1(z,0), \dots, F_{n-1}(z,0)$ is of finite codimension in $\mathbb{C}[\![z]\!]$. We denote this codimension by $\mathrm{Mult}\,(H,0)$. It is independent of normal coordinates.
2. If H is of finite multiplicity, then a formal Hopf Lemma holds at the origin, which tells us that the induced formal mapping $T_0M/T_0^cM \to T_0M'/T_0^cM'$ represented by $G(0,w)$ is of formal rank equal to 1. Equivalently, $(\partial G/\partial w)(0) \neq 0$.

The multiplicity $\mathrm{Mult}\,(H,0)$ is independent of normal coordinates, so it is a meaningful invariant of h at an arbitrary point of M. In normal coordinates, essential finiteness of M at p is characterized by the finite codimensionality in $\mathbb{C}\{t\}$ of the ideal generated by the $\Theta_\beta(t)$ for all $\beta \in \mathbb{N}^{n-1}$. This codimension is independent of coordinates and denoted by $\mathrm{Ess\,Type}\,(M,p)$. Recall that $M \backslash E_M$ is defined to be the set of points $q \in M$ at which the mapping $t \mapsto (\Theta_\beta(t))_{\beta \in \mathbb{N}^{n-1}}$ is of rank n in coordinates vanishing at q. Consequently

Lemma 9.9. *For every $q \in M \backslash E_M$, we have* $\mathrm{Ess\,Type}\,(M,q) = 1$.

A refinement of the analytic reflection principle proved in [BR1] is as follows ([BR2, Theorem 6]).

Lemma 9.10. *The $\mathscr{C}^\infty$-smooth CR mapping h extends holomorphically to a neighborhood of a point $q \in \mathbb{C}^n$ provided that in normal coordinates centered at q and at $q' = h(q)$, the normal component g of h is not flat at the origin, namely its formal power series G does not vanish identically.*

Furthermore, in the case where the mapping h extends holomorphically at one point, four interesting nondegeneracy properties hold:

Lemma 9.11. *With the same assumptions as in Theorem 9.3, let $q \in M$, let $q' := h(q)$ and assume that h extends holomorphically to a neighborhood of q. Then*

(1) *The induced differential* $dh : T_qM/T_q^cM \to T_{q'}M'/T_{q'}^cM'$ *is of rank* 1.

(2) *The mapping* h *is of finite multiplicity* $m := \mathrm{Mult}\,(h, q) < \infty$ *and* h *is a local* m*-to one holomorphic mapping in a neighborhood of* q.

(3) *We have the multiplicative relation*

$$\mathrm{Ess\,Type}\,(M, q) = \mathrm{Mult}\,(h, q) \cdot \mathrm{Ess\,Type}\,(M', q'). \tag{9.12}$$

(4) *If* $q \in M \backslash E_M$*, then* h *is a local biholomorphism at* q.

9.13. Installation of the proof of Theorem 9.3. Let E_{na} be the closed set of points of M at which the mapping h is not real analytic. By Lemma 9.6, the complement $M \backslash E_{\mathrm{na}}$ is nonempty and in fact dense in M. If E_{na} is empty, then Theorem 9.3 is proved, gratuitously. As in §2 and §5 above, we shall assume that E_{na} is nonempty and we shall construct a contradiction by showing that there exists in fact a point p_1 of E_{na} at which h is real analytic. By Lemma 5.4, we are reduced to the following statement, which is analogous to Theorem 5.5.

Theorem 9.14. *Let* $p_1 \in E_{\mathrm{na}}$ *and assume that there exists a real analytic one-codimensional submanifold* M_1 *of* M *with* $p_1 \in M_1$ *which is generic in* $\mathbb{C}^n$ *such that* $E_{\mathrm{na}} \backslash \{p_1\}$ *is completely contained in one of the two open sides of* M *divided by* M_1*, say in* M_1^+*, and such that* h *is real analytic at every point* $q \in M \backslash E_{\mathrm{na}}$*. Then* h *is real analytic at* p_1.

To prove this theorem, we shall start as follows. We remind that the intrinsic exceptional locus E_M of M is of real codimension at least two in M. At each point $q \in M \backslash E_M$, the hypersurface M is finitely nondegenerate. It follows from Lemma 9.11**(4)** that at each point $q \in M \backslash (E_M \cup E_{\mathrm{na}})$, the mapping h extends as a local biholomorphism from a neighborhood of q in $\mathbb{C}^n$ onto a neighborhood of $h(q)$ in $\mathbb{C}^n$. Consider the relative disposition of the center point p_1 with respect to E_M. In principle, there are two cases to be considered. Either $p_1 \in E_M$ or $p_1 \in M \backslash E_M$. In both cases, we have the following useful existence property.

Lemma 9.15. *There exists a small two-dimensional open real analytic manifold* K *passing through* p_1 *and contained in* M *such that*

(1) K *is transversal to* M_1.

(2) $K \cap E_M = \{p_1\}$ *and the line* $T_{p_1}K \cap T_{p_1}M_1$ *is not contained in* $T_{p_1}^cM$.

Proof. Indeed, introducing real analytic coordinates on M, this follows from a more general statement. Given a locally defined real analytic set E in $\mathbb{R}^\nu$ of dimension $1 \leq \mu \leq \nu - 1$ passing through the origin, then for almost all $(\nu - \mu)$-dimensional linear planes K passing through the origin, the intersection of K with E consists of the singleton $\{0\}$ in a neighborhood of the origin. $\square$

It follows from Lemma 9.15 that the intersection $K \cap M_1$ coincides with a geometrically smooth real analytic arc γ_1 passing through p_1 which is not

complex tangential at p_1. By construction, $\gamma_1 \backslash \{p_1\}$ is contained in the locus $M \backslash E_{\rm na}$ where h is already real analytic. Moreover, $\gamma_1 \backslash \{p_1\}$ is also contained in $M \backslash E_M$. Its complexification $(\gamma_1)^c$ is a complex disc transversal to M with $(\gamma_1)^c \cap M = \gamma_1$. Recall that h already extends holomorphically to a one-sided neighborhood D of M. To fix ideas, we can assume that D is in the lower side M^- of M in $\mathbb{C}^n$. Moreover, h extends holomorphically to an open neighborhood Ω of $M \backslash E_{\rm na}$ in $\mathbb{C}^n$. We choose *normal* coordinates t vanishing at p_1 in which the equation of M is of the form $\bar{w} = \Theta(\bar{z}, t)$, with $\Theta(0, t) \equiv w$. Especially, we choose such coordinates in order that γ_1 coincides with a small neighborhood of the origin in the u-axis in these normal coordinates, which is possible. Also, we choose some arbitrary *normal* coordinates t' vanishing at $p_1' := h(p_1)$ in which the equation of M' is of the form $\bar{w}' = \Theta'(\bar{z}', t')$, with $\Theta'(0, t') \equiv w'$. We denote the mapping by $h = (f, g) = (f_1, \ldots, f_{n-1}, g)$ in these coordinates.

Suppose for a while that we have proved that the normal component g of the mapping extends holomorphically to a neighborhood of the point p_1 in the transverse holomorphic disc $(\gamma_1)^c$, which coincides with a small neighborhood of the origin in the w-axis. Notice that we speak only of holomorphic extension to the single transverse holomorphic disc passing through p_1, because our method below will not give more. Then we claim that the proofs of Theorems 9.14 and 9.3 are achieved. Indeed, it suffices to show that the holomorphic extension $g(0, w)$ at $w = 0$ does not vanish identically, since then it follows afterwards that the Taylor series G at the origin of the normal component g does not vanish identically, whence h extends holomorphically at p_1 thanks to Lemma 9.10. To prove that the extension $g(0, w)$ is nonzero, we reason as follows. According to Lemma 9.11**(1)**, at every point $q \in \gamma_1$ sufficiently close to p_1 and different from p_1, the induced differential $dh : T_q M / T_q^c M \to T_{q'} M' / T_{q'}^c M'$ is of rank one. This entails that the differential $\partial_w g(0, w)$ is nonzero at $w := w_q$, which shows that the holomorphic extension $g(0, w)$ does not vanish identically, as desired. In summary, to prove Theorems 9.14 and 9.3, it remains to establish the following crucial statement.

Lemma 9.16. *The $\mathscr{C}^\infty$-smooth restrictions $f_1|_{\gamma_1}, \ldots, f_{n-1}|_{\gamma_1}$ and $g|_{\gamma_1}$ extend holomorphically to a small neighborhood of p_1 in the complex disc $(\gamma_1)^c$.*

9.17. Holomorphic extension to a transverse holomorphic disc. This subsection is devoted to the proof of Lemma 9.16. Using the manifold K of Lemma 9.15, we can include γ_1 into a one-parameter family γ_s of real analytic arcs, with $s_1 < s \leq 1$, contained in K which foliate $K \cap M_1^-$ for $s_1 < s < 1$. Since for $s_1 < s < 1$, the arcs γ_s are contained in M_1^-, we have $\gamma_s \cap E_{\rm na} = \emptyset$. By Lemma 9.15, we also have the important property $\gamma_s \cap E_M = \emptyset$. We consider the complexifications $(\gamma_s)^c$, which are transversal to M. One half of the complex discs $(\gamma_s)^c$ is contained in D. The crucial Lemma 9.19 below is extracted from [P4, Lemma 3.1] and is

particularized to our $\mathscr{C}^\infty$-smooth situation. In the sequel, it will be applied to the one-dimensional domains of the complex plane $\mathbb{C}$ defined by

$$U_s := (\gamma_s)^c \,\cap\, D \,\cap\, \{|w| < r\}, \tag{9.18}$$

where $r > 0$ is sufficiently small and to certain antiholomorphic functions to be defined later. First of all, we introduce some notation. As the complex disc $(\gamma_s)^c$ is transverse to M and almost parallel to the w-axis, it follows that U_s is a small one-dimensional simply connected domain in $(\gamma_s)^c$ bounded by two real analytic parts which we shall denote by $\delta_s \subset \gamma_s$ and by $\beta_s \subset \{|w| = r\} \cap (\gamma_s)^c \cap D$. These two real analytic arcs join together at two points $q_s^+ \in \gamma_s$ and $q_s^- \in \gamma_s$, namely $\{q_s^-, q_s^+\} = \gamma_s \cap \{w = r\} = \delta_s \cap \beta_s$. Then the boundaries δ_s and γ_s depend real analytically on s, even in a neighborhood of $s = 1$. We consider the two *open* real analytic arcs $\delta_s^\circ := \delta_s \backslash \{q_s^-, q_s^+\}$ and similarly for β_s°. Here is the lemma.

Lemma 9.19. *Let $U_s \subset \mathbb{C}$ be a one-parameter family of bounded simply connected domains in $\mathbb{C}$ having piecewise real analytic boundaries with two open pieces δ_s° and β_s° depending real-analytically on a real parameter $s_1 < s \leq 1$, let φ_s, ψ_s be antiholomorphic functions defined in U_s which depend $\mathscr{C}^\infty$-smoothly on s and set $\theta_s := \varphi_s/\psi_s$. Assume that the following four conditions hold.*

- **(1)** *For $s < 1$, the two functions φ_s and ψ_s extend antiholomorphically to a certain neighborhood of $\overline{U}_s$ in $\mathbb{C}$ and there exists a point $p_1 \in \delta_1^\circ$ so that φ_1 and ψ_1 extend antiholomorphically to a neighborhood of $\overline{U_1} \backslash \{p_1\}$ in $\mathbb{C}$ and $\mathscr{C}^\infty$-smoothly up to the open arc δ_1°.*
- **(2)** *The quotient $\theta_1 := \varphi_1/\psi_1$ is of class $\mathscr{C}^\infty$ over δ_1°.*
- **(3)** *For $s < 1$, the function ψ_s does* not *vanish on ∂U_s and there exists a constant $C > 0$ such that $|\theta_s| \leq C$ on ∂U_s for all $s_1 < s < 1$.*
- **(4)** *The function ψ_1 does not vanish on $\overline{U_1} \backslash \{p_1\}$.*

Then the quotient θ_1 satisfies $|\theta_1| \leq C$ on U_1 and it extends as an antiholomorphic function to U_1 which is of class $\mathscr{C}^\infty$ up to the open real analytic piece δ_1° of the boundary.

Proof. In view of the nonvanishing of ψ_s in ∂U_s, the function ψ_s has in U_s a certain number m (counting multiplicities) of zeros which is constant for all $s_1 < s < 1$. Using a conformal isomorphism of U_s with the unit disc and an antiholomorphic Blaschke product, we can construct an antiholomorphic function b_s on U_s extending $\mathscr{C}^\infty$-smoothly to the boundary with $|b_s| = 1$ on ∂U_s such that the m zeros of b_s coincide with the m zeros of ψ_s. Then $b_s\theta_s$ is holomorphic in U_s for $s_1 < s < 1$. It follows from the maximum principle that $|b_s\,\theta_s| \leq C$ on $\overline{U}_s$ for all $s_1 < s < 1$. Since $\psi_1 \neq 0$ in $\overline{U_1} \backslash \{p_1\}$, when $s \to 1$, all zeros of the function ψ_s converge to the single point $p_1 \in \partial U_1$. From the form of a Blaschke product, we observe that $\lim_{s\to 1} |b_s(z)| = 1$ for every point $z \in U_1$. Therefore, for $z \in U_1$, we have

$$|\theta_1(z)| = \lim_{s\to 1} |\theta_s(z)| = \lim_{s\to 1} |b_s(z)\,\theta_s(z)| \leq C. \tag{9.20}$$

So the function θ_1 is bounded in U_1. Since its boundary value φ_1/ψ_1 is of class $\mathscr{C}^\infty$ on δ_1°, it follows that the antiholomorphic function θ_1 extends $\mathscr{C}^\infty$-smoothly up to $\delta_1^\circ \cup \beta_1^\circ$. The proof of Lemma 9.19 is complete. $\square$

We can bow begin the proof of Lemma 9.16. Let $\overline{L}_1, \dots, \overline{L}_{n-1}$ denote the commuting basis of $T^{0,1}M$ given by $\overline{L}_j = \frac{\partial}{\partial \bar{z}_j} + \Theta_{\bar{z}_j}(\bar{z}, t)\, \frac{\partial}{\partial \bar{w}}$, for $j = 1, \dots, n-1$. In a neighborhood of the arc γ_s for $s < 1$, the mapping h extends holomorphically as a local biholomorphism. It follows that the determinant

$$\det\,(\overline{L}_j\, \overline{f_k}(\bar{t}))_{1\le j,k\le n-1} := \mathscr{D}(z, \bar{t}, \{\partial_{\bar{t}_l} \overline{f_k}(\bar{t})\}_{1\le l\le n,\, 1\le k\le n-1}) \tag{9.21}$$

does not vanish for $t \in M$ in a neighborhood of γ_s. Also, it extends as a certain antiholomorphic function to the domain U_s. Let us denote this extension by ψ_s. In order that the function ψ_s satisfies the assumption **(4)** of Lemma 9.19, we first observe that the determinant (9.21) does not vanish on the part $\delta_1 \backslash \{p_1\}$ of $\partial U_1 \backslash \{p_1\}$. Indeed, since h is real analytic at every point of $\delta_1 \backslash \{p_1\}$ and since $\delta_1 \backslash \{p_1\}$ is contained in $M \backslash E_M$, this follows from Lemma 9.11**(4)**. For the second part β_1 of ∂U_1, we observe that for every small $r > 0$ as in (9.18), the determinant (9.10), extends as an antiholomorphic function to U_1 and is in fact real analytic in a neighborhood of β_1. Since the determinant (9.21) does not vanish on $\delta_1 \backslash \{p_1\}$, there exist arbitrarily small $r > 0$ such that ψ_1 does not vanish over β_1. Shrinking s_1, we can assume that ψ_s does not vanish on β_s for all $s_1 < s \le 1$. Finally, we know already that for $s < 1$, the function ψ_s does not vanish on δ_s, thanks to the fact that $\gamma_s \cap E_M$ is empty. Since ψ_s does not vanish on the boundary ∂U_s for all $s_1 < s < 1$, it follows from Rouché's theorem that the number of zeros of ψ_s in U_s is constant equal to m (counting multiplicities). Therefore, even for $s = 1$, the function ψ_1 has in U_1 not more than m zeros. Decreasing $r > 0$ once more, we can assume that ψ_1 does not vanish in U_1. This shows that ψ_s satisfies all the assumptions of Lemma 9.19.

Next, as the mapping h is of class $\mathscr{C}^\infty$ over M, we can apply the tangential Cauchy-Riemann derivations $\overline{L}_1^{\beta_1} \cdots \overline{L}_{n-1}^{\beta_{n-1}}$, $\beta \in \mathbb{N}^{n-1}$, of order $|\beta|$ infinitely many times to the identity

$$\overline{g(t)} = \Theta'(\overline{f(t)}, h(t)), \tag{9.22}$$

which holds for all $t \in M$ in a neighborhood of p_1. As in §7 above, using the nonvanishing of the determinant we get for all $\beta \in \mathbb{N}^{n-1}$ and for all $t \in \gamma_s$ with $s < 1$ the following identities

$$\frac{1}{\beta!}\, \frac{\partial^{|\beta|}\Theta'}{\partial (z')^\beta}(\overline{f(t)}, h(t)) = \frac{\mathscr{T}_\beta(z, \bar{t}, \{\partial_{\bar{t}}^\gamma \overline{h_j}(\bar{t})\}_{1\le j\le n,\, |\gamma|\le|\beta|})}{[\mathscr{D}(z, \bar{t}, \{\partial_{\bar{t}_l} \overline{f_k}(\bar{t})\}_{1\le l\le n,\, 1\le k\le n-1})]^{2|\beta|-1}}. \tag{9.23}$$

Precisely, the $\mathscr{T}_\beta$'s are holomorphic with respect to $(z, \bar{t})$ and relatively polynomial with respect to the jets $\{\partial_{\bar{t}}^\gamma \overline{h_j}(\bar{t})\}_{1\le j\le n,\, |\gamma|\le|\beta|}$. It follows that the numerator $\mathscr{T}_\beta$ extends antiholomorphically to U_s for every $s_1 < s \le 1$ as a certain function which we shall denote by $\varphi_{\beta,s}$. We set $\psi_{\beta,s} := [\psi_s]^{2|\beta|-1}$.

For $t \in \gamma_s \subset M$ with $s < 1$, let us rewrite (9.23) as follows:

$$(1/\beta!)\,[\partial^{|\beta|}\Theta'/\partial(z')^\beta](\overline{f(t)}, h(t)) = \varphi_{\beta,s}(\bar{t})/\psi_{\beta,s}(\bar{t}). \tag{9.24}$$

As the left hand side of (9.24) is of class $\mathscr{C}^\infty$ on γ_s, it follows that the right hand side is of class $\mathscr{C}^\infty$ on δ_s°, for all $s \leq 1$. By construction, for all $\beta \in \mathbb{N}^{n-1}$, the function $\psi_{\beta,s}$ has no zeros on the boundary ∂U_s for $s < 1$ and it also has no zeros on $\partial U_1 \backslash \{p_1\}$. Furthermore, these two functions $\varphi_{\beta,s}$ and $\psi_{\beta,s}$ both extend antiholomorphically to a neighborhood of $\overline{U_s}$ in $(\gamma_s)^c$ for $s < 1$ and to a neighborhood of $\overline{U_1}\backslash\{p_1\}$ for $s = 1$. Let us define $\theta_{\beta,s} := \varphi_{\beta,s}/\psi_{\beta,s}$. By Lemma 9.19, for $s = 1$, the functions $\theta_{\beta,1}$ extend antiholomorphically to U_1 as bounded functions and $\mathscr{C}^\infty$-smoothly up to the open real analytic arc δ_1°. In summary, we have shown that for all $\beta \in \mathbb{N}^{n-1}$, there exist functions $\theta_{\beta,1}(\bar{t})$ defined for $t \in \delta_1$ and extending as antiholomorphic functions to U_1 which are of class $\mathscr{C}^\infty$ up to δ_1° such that the following identities hold on δ_1:

$$(1/\beta!)\,[\partial^{|\beta|}\Theta'/\partial(z')^\beta](\overline{f(t)}, h(t)) = \theta_{\beta,1}(\bar{t}). \tag{9.25}$$

Next, we may derive some polynomial identities in the spirit of [BJT], [BR1]. By the relation (9.25) written for $t := p_1 \in \delta_1^\circ$, we see that $\theta_{\beta,1}(\bar{p}_1) = 0$, because $h(p_1) = p_1'$ sends the origin p_1 (in the coordinate system t) to the origin p_1' (in the coordinate system t') and because the coordinates are normal. As M' is essentially finite at the origin, there exists an integer $\kappa \in \mathbb{N}_*$ such that the ideal $(\Theta'_\beta(t'))_{|\beta|\leq\kappa}$ is of finite codimension in $\mathbb{C}\{t'\}$. It follows from (9.24) and from a classical computation (*cf.* [BJT], [BR1]) that there exist analytic cooeficients $A_{j,k}$ in their variables which vanish at the origin and integers $N_j \geq 1$ such that, after possibly shrinking $r > 0$, we have

$$h_j^{N_j}(t) + \sum_{k=1}^{N_j} A_{j,k}(\overline{f(t)}, \{\theta_{\beta,1}(\bar{t})\}_{|\beta|\leq\kappa})\, h_j^{N_j-k}(t) = 0, \tag{9.26}$$

for all $t \in \delta_1$. It follows that these coefficients $A_{j,k}$, considered as functions of one real variable in δ_1, extend as antiholomorphic functions to U_1. In summary, we have constructed some polynomial identities for the components of the mapping h with antiholomorphic coefficients which hold only on the single transverse half complex disc $U_1 = (\gamma_1)^c \cap D$ in a neighborhood of p_1. These polynomial identities are crucial to show that the mapping h restricted to $(\gamma_1)^c \cap D$ extends holomorphically to a neighborhood of p_1 in $(\gamma_1)^c$.

Indeed, by following the last steps of the general approach of [BJT], [BR1,§7], we deduce that the reflection function (as denoted in equation (8.1) of [BR1,§8]) extends holomorphically to a neighborhood of the point p_1 in $(\gamma_1)^c$ as a function of one complex variable w (remember that $(\gamma_1)^c$ is contained in the w-axis). We would like to mention that in the strongly pseudoconvex case, such a holomorphic extension to a single transverse holomorphic disc was first derived by Pinchuk in [P4] in the more

general case where h is only continuous at p_1 and real analytic in $M \backslash E_{\mathrm{na}}$. Finally, using the real analyticity of the reflection function, using the $\mathscr{C}^\infty$-smoothness of $h|_{\gamma_1}$ and using Puiseux series as in [BJT], we deduce that $h|_{\gamma_1}$ is real analytic at p_1. The proof of Theorem 9.3 is complete. $\square$

A careful inspection of the above arguments shows that there is no obvious possibility to get an extension to the complex discs $(\gamma_s)^c$ with a uniform control of the size of the domains of extension. Only the extension to the limit complex disc $(\gamma_1)^c$ can be obtained.

9.27. Strong uniqueness principle for CR mappings. We end up this section by an application of Theorem 9.2. A similar application of Theorem 9.3 may be stated.

Theorem 9.28. *Let $h : M \to M'$ and $h^* : M \to M'$ be two $\mathscr{C}^\infty$-smooth CR mappings between two connected, real analytic hypersurfaces in $\mathbb{C}^n$ and let $p \in M$. If M and M' do not contain complex curves, then there exists an integer $\kappa \in \mathbb{N}_*$ which depends only on p, on M and on M' such that if the two κ-jets of h and h^* coincide at p, then $h \equiv h^*$ over M.*

Proof. By Theorem 9.2, we can assume that h and h^* are both holomorphic in a neighborhood of p and nonconstant. By Lemma 9.11, the two mappings h and h_* satisfies the Hopf Lemma at p and are of finite multiplicity. It follows from a careful inspection of the analytic versions of the reflection principle given in [BR1], [BR2] that if κ is large enough, then the two mappings h and h^* coincide in a neighborhood of p. In fact, the complete arguments already appeared in a more general context in [BER3, Theorem 2.5]. Then $h \equiv h^*$ all over M by analytic continuation. For the particular case of germs, Theorem 9.28 is conjectured in [BER4, p. 238]. $\square$

§10. Open problems and conjectures

In the celebrated article [DP2], the following conjecture stated *without pseudoconvexity assumption*, was solved in the case $n = 2$.

Conjecture 10.1. Let $h : D \to D'$ be a proper holomorphic mapping between two bounded domains in $\mathbb{C}^n$ $(n \geq 2)$ having real analytic and geometrically smooth boundaries. Then h extends holomorphically to an open neighborhood of $\overline{D}$ in $\mathbb{C}^n$.

To the author's knowledge, the conjecture is open for $n \geq 3$. In fact, among other conjectures, it has been conjectured for a long time that every such proper holomorphic mapping $h : D \to D'$ extends *continuously* to the boundary M of D and that in this case, h is real analytic at every point of M. In the much easier case where h extends $\mathscr{C}^\infty$-smoothly up to M, Theorem 9.2 above, in which no formal rank assumption is imposed on the Taylor series of h at points of M, provides a positive answer. Analogously, in Theorems 1.2 and 1.9, it would be very desirable to remove the diffeomorphism assumption and also the $\mathscr{C}^\infty$-smoothness assumption. We have

strongly used these two assumptions in the proof and we have found no way to do without. Nevertheless, inspired by above conjectures, it is natural to suggest the following two open problems.

Conjecture 10.2. Let $h : M \to M'$ be a continuous CR mapping between two globally minimal real analytic hypersurfaces in $\mathbb{C}^n$ $(n \geq 2)$ and assume that the holomorphic extension of h to a global one-sided neighborhood D of M in $\mathbb{C}^n$ is of generic rank equal to n. Then the reflection function extends holomorphically to a neighborhood of every point $p \times \overline{h(p)}$ in the graph of $\bar{h}$.

The rank assumption is really necessary, as shown by the following trivial example. Let $M \subset \mathbb{C}^4$ be the product of $\mathbb{C}^1_{z_2} \times \mathbb{C}^1_{z_3}$ with the unbounded representation of the 3-sphere given by the equation $w = \bar{w} + iz\bar{z}$, let $M' \subset \mathbb{C}^4$ be given by $w' = \bar{w}' + iz_1'\bar{z}_1' + iz_2'\bar{z}_3' + i\bar{z}_2'z_3'$, let $h_2(z_1, w)$ be a CR function on M independent of (z_2, z_3), of class $\mathscr{C}^\infty$, which does not extend holomorphically to the pseudoconcave side of M at any point. Then the degenerate mapping $(z_1, z_2, z_3, w) \mapsto (z_1, h_2(z_1, w), 0, w)$ maps M into M' but does not extend holomorphically to a neighborhood of M in $\mathbb{C}^2$. Suppose by contradiction that the globally defined reflection function $\mathscr{R}_h'(t, \bar{\nu}') = \bar{\mu}' - w - i\bar{\lambda}_1' z_1 - i\bar{\lambda}_3' h_2(z_1, w)$ extends holomorphically to a neighborhood of 0×0 in $\mathbb{C}^4 \times \mathbb{C}^4$. Differentiating with respect to $\bar{\lambda}_3'$, we deduce that $h_2(w_1, z)$ extends holomorphically at the origin in $\mathbb{C}^4$, contradiction. In fact, to speak of the extendability of the reflection function, one has to choose for M' the *minimal for inclusion* real analytic subset containing the image $h(M)$, as argued in [Me5]. In the case where the generic complex rank of h over D equals n, then M' necessarily is the minimal for inclusion real analytic set containing $h(M)$. This explains the rank assumption in Conjecture 10.2.

Finally, in the holomorphically nondegenerate case, we expect that h be holomorphically extendable to a neighborhood of M.

Conjecture 10.3. Let $h : M \to M'$ be a continuous CR mapping between two globally minimal real analytic hypersurfaces in $\mathbb{C}^n$ $(n \geq 2)$, assume that the holomorphic extension of h to a global one-sided neighborhood D of M in $\mathbb{C}^n$ is of generic complex rank equal to n and assume that M' is holomorphically nondegenerate. Then h is real analytic at every point of M.

References

[A] AĬRAPETYAN, R.A.: *Extension of CR-functions from piecewise smooth CR manifolds*, Mat. Sb. **134(176)** (1987), no.1, 108–118. English transl. in Math. USSR-Sb. **62** (1989), no.1, 111–120.

[Ar] ARTIN, M.: *On the solutions of analytic equations*, Invent. Math. **5** (1968), 277–291.

[BER1] BAOUENDI, M.S.; EBENFELT, P.; ROTHSCHILD, L.P.: *Algebraicity of holomorphic mappings between real algebraic sets in* $\mathbb{C}^n$, Acta Math. **177** (1996), no.2, 225–273.

[BER2] BAOUENDI, M.S.; EBENFELT, P.; ROTHSCHILD, L.P.: *Real submanifolds in complex space and their mappings*. Princeton Mathematical Series, **47**, Princeton University Press Princeton, NJ, 1999, xii+404 pp.

[BER3] BAOUENDI, M.S.; EBENFELT, P.; ROTHSCHILD, L.P.: *Convergence and finite determinacy of formal CR mappings*, J. Amer. Math. Soc. **13** (2000), no.4, 697–723.

[BER4] BAOUENDI, M.S.; EBENFELT, P.; ROTHSCHILD, L.P.: *Local geometric properties of real submanifolds in complex space*, Bull. Amer. Math. Soc. **37** (2000), no.3, 309–336.

[BHR] BAOUENDI, M.S.; HUANG, X.; ROTHSCHILD, L.P.: *Regularity of CR mappings between algebraic hypersurfaces* Invent. Math. **125** (1996), no.1, 13–36.

[BJT] BAOUENDI, M.S.; JACOBOWITZ, H.; TREVES, F.: *On the analyticity of CR mappings*, Ann. Math **122** (1985), no.2, 365–400.

[BR1] BAOUENDI, M.S.; ROTHSCHILD, L.P.: *Germs of CR maps between real analytic hypersurfaces*, Invent. Math. **93** (1988), no.3, 481–500.

[BR2] BAOUENDI, M.S.; ROTHSCHILD, L.P.: *Geometric properties of mappings between hypersurfaces in complex space*, J. Differential Geom. **31** (1990), no.2, 473–499.

[BR3] BAOUENDI, M.S.; ROTHSCHILD, L.P.: *Cauchy-Riemann functions on manifolds of higher codimension in complex space*, Invent. Math. **101** (1990), no.1, 45–56.

[BR4] BAOUENDI, M.S.; ROTHSCHILD, L.P.: *Mappings of real algebraic hypersurfaces*, J. Amer. Math. Soc. **8** (1995), no.4, 997–1015.

[BT1] BAOUENDI, M.S.; TREVES, F: *A property of the functions and distributions annihilated by a locally integrable system of complex vector fields*, Ann. of Math. **113** (1981), no.2, 387–421.

[BT2] BAOUENDI, M.S.; TREVES, F: *About the holomorphic extension of CR functions on real hypersurfaces in complex space*, Duke Math. J. **51** (1984), no.1, 77–107.

[BeFo] BEDFORD, E.; FORNÆSS, J.E.: *Local extension of CR functions from weakly pseudoconvex boundaries*, Michigan Math. J. **25** (1978), no.3, 259–262.

[BePi] BEDFORD, E.; PINCHUK, S.: *Analytic continuation of biholomorphic maps*, Michigan Math. J., **28** (1987), no.3, 405–408.

[CMS] COUPET, B.; MEYLAN, F.; SUKHOV, A.: *Holomorphic maps of algebraic CR manifolds*, Internat. Math. Res. Notices **1999**, no.1, 1–29.

[CPS1] COUPET, B.; PINCHUK, S.; SUKHOV, A.: *On partial analyticity of CR mappings*, Math. Z. **235** (2000), 541–557.

[CPS2] COUPET, B.; PINCHUK, S.; SUKHOV, A.: *Analyticité des applications CR*, C. R. Acad. Sci. Paris Sér. I Math. **329** (1999), no.6, 489–494.

[D'A] D'ANGELO, J. P.: *Several Complex Variables and the Geometry of Real Hypersurfaces*, Studies in Advanced Mathematics. CRC Press, Boca Raton, FL, 1993.

[Da1] DAMOUR, S.: *Sur l'algébricité des applications holomorphes*, C. R. Acad. Sci. Paris Sér. I Math. **332** (2001), no.6, 491–496.

[Da2] DAMOUR, S.: *On the analyticity of smooth CR mappings between real analytic CR manifolds*, Michigan Math. J. **49** (2001), no.3, 583–603.

[De] DERRIDJ, M.: *Le principe de réflexion en des points de faible pseudoconvexité pour des applications holomorphes propres*, Invent. Math. **79** (1985), no.1, 197–215.

[DF1] DIEDERICH, K.; FORNÆSS, J.E.: *Pseudoconvex domains with real analytic boundary*, Ann. of Math. **107** (1978), no.2, 371–384.

[DF2] DIEDERICH, K.; FORNÆSS, J.E.: *Biholomorphic maps between certain real analytic domains in* $\mathbb{C}^2$, Math. Ann. **245** (1979), no.3, 255–272.

[DF3] DIEDERICH, K.; FORNÆSS, J.E.: *Biholomorphic mappings between two-dimensional Hartogs domains with real analytic boundaries*, Recent Developments in Several Complex Variables (Fornæss, J. E., ed.), pp. 133–150, Ann. Math. Studies, vol. 100, Princeton University Press, Princeton N.J., 1981.

[DF4] DIEDERICH, K.; FORNÆSS, J.E.: *Proper holomorphic mappings between real-analytic pseudoconvex domains in* $\mathbb{C}^n$, Math. Ann **282** (1988), no.4, 681–700.

[DFY] DIEDERICH, K.; FORNÆSS, J.E.; YE, Z.: *Biholomorphisms in dimension 2*, J. Geom. Anal. **4** (1994), no.4, 539–552.

[DP1] DIEDERICH, K.; PINCHUK, S.: *Proper holomorphic maps in dimension 2 extend*, Indiana Univ. Math. J. **44** (1995), no.4, 1089–1126.

[DP2] DIEDERICH, K.; PINCHUK, S.: *Reflection principle in higher dimensions*, Proceedings of the International Congress of Mathematicians, Vol II (Berlin 1998), Doc. Math. 1998, Extra Vol. II, 703–712.

[DW] DIEDERICH, K.; WEBSTER, S.M.: *A reflection principle for degenerate real hypersurfaces*, Duke Math. J. **47** (1980), no.4, 835–843.

[F] FORSTNERIC, F.: *Extending proper holomorphic mappings of positive codimension*, *Invent. Math.*, **95** (1989), no.1, 31–62.

[Ha] HAN, C.K.: *Analyticity of CR equivalences between some real analytic hypersurfaces in* $\mathbb{C}^n$ *with degenerate Levi-forms*, Invent. Math **73** (1983), no.1, 51–69.

[HaTr] HANGES, N.; TREVES, F.: *Propagation of holomorphic extendability of CR functions*, Math. Ann. **263** (1983), no.2, 157–177.

[Hu] HUANG, X.: *Schwarz reflection principle in complex spaces of dimension two*, Comm. Partial Differential Equations **21** (1996), no.11-12, 1781–1828.

[HMM] HUANG, X.; MERKER, J.; MEYLAN, F.: *Mappings between degenerate real analytic hypersurfaces in* $\mathbb{C}^n$, Analysis, geometry, number theory: the mathematics of Leon Ehrenpreis (Philadelphia, PA, 1998), 321–338. Contemp. Math., **251**, Amer. Math. Soc., Providence, RI, 2000.

[J] JÖRICKE, B.: *Deformation of CR-manifolds, minimal points and CR-manifolds with the microlocal analytic extension property*, J. Geom. Anal. **6** (1996), no.4, 555–611.

[L] LEWY, H.: *On the boundary behaviour of holomorphic mappings*, Contrib. Centro Linceo Inter. Sc. Mat. e Loro Appl. No. 35, Accad. Naz. Lincei (1977), 1–8.

[MaMe] MAIRE, H.; MEYLAN, F.: *Extension of smooth CR mappings between non-essentially finite hypersurfaces in* $\mathbb{C}^3$, Ark. Math. **35** (1997), no.1, 185–199.

[Ma] MALGRANGE, B.: *Ideals of Differentiable Functions*, Tata Institute of Fundamental Research Studies in Mathematics, No.3, Tata Institute of Fundamental Research, Bombay; Oxford University Press, London, 1967, vii+106 pp.

[Me1] MERKER, J.: *Global minimality of generic manifolds and holomorphic extendibility of CR functions*, Internat. Math. Res. Notices **1994**, no.8, 329 ff., approx. 14 pp. (electronic), 329–342.

[Me2] MERKER, J.: *On removable singularities for CR functions in higher codimension*, Internat. Math. Res. Notices **1997**, no.1, 21 ff., approx. 36 pp. (electronic), 21–56.

[Me3] MERKER, J.: *On the Schwarz symmetry principle in three-dimensional complex euclidean space*, Prépublication École Normale Supérieure, **25** (1997), 62 pp.

[Me4] MERKER, J.: *Vector field construction of Segre sets*, Preprint 1998, augmented in 2000. Downloadable at `arXiv.org/abs/math.CV/9901010`.

[Me5] MERKER, J.: *On the partial algebraicity of holomorphic mappings between two real algebraic sets in the complex euclidean spaces of different dimensions*, Bull. Soc. Math. France **129** (2001), no.4, 547–591.

[Me6] MERKER, J.: *Étude de la régularité analytique de l'application de symétrie CR formelle*, Preprint, June 2000. *e-print*: `arXiv.org/math/abs/0005290`.

[Me7] MERKER, J.: *Convergence of formal invertible CR mappings between minimal holomorphically nondegenerate real analytic hypersurfaces*, Int. J. Math. Math. Sci., **26** (2001), no.5, 281–302.

[Me8] MERKER, J.: *Étude de la régularité analytique de l'application de symétrie CR formelle*, C. R. Acad. Sci. Paris Sér. I Math. **333** (2001), no.3, 165–168.

[MM1] MERKER, J.; MEYLAN, F.: *Extension de germes de difféomorphismes CR pour une classe d'hypersurfaces analytiques réelles non essentiellement finies dans* $\mathbb{C}^3$, Complex variables Theory Appl. **40** (1999), no.1, 19–34.

[MM2] MERKER, J.; MEYLAN, F.: *On the Schwarz symmetry principle in a model case*, Proc. Amer. Math. Soc. **127**, (1999), no.4, 1097–1102.

[MP1] MERKER, J.; PORTEN, E.: *On removable singularities for integrable CR functions*, Indiana Univ. Math. J. **48** (1999), no.3, 805–856.

[MP2] MERKER, J.; PORTEN, E.: *On wedge extendability of CR-meromorphic functions*, Math. Z. (to appear).

[Mey] MEYLAN, F.: *The reflection principle in complex space*, Indiana Univ. Math. J. **44** (1995), no.3, 783–796.

[Mi1] MIR, N.: *An algebraic characterization of holomorphic nondegeneracy for real algebraic hypersurfaces and its application to CR mappings*, Math. Z. **231**, (1999), no.1, 189–202.

[Mi2] MIR, N.: *Germs of holomorphic mappings between real algebraic hypersurfaces*, Ann. Inst. Fourier **48** (1998), no.3, 1025–1043.

[Mi3] MIR, N.: *On the convergence of formal mappings*, Comm. Anal. Geom. (to appear).

[Mi4] MIR, N.: *Formal biholomorphic maps of real analytic hypersurfaces*, Math. Res. Letters **7** (2000), no.2-3, 343–359.

[N] NEELON, T.S.: *On solutions of real analytic equations*, Proc. Amer. Math. Soc. **125** (1997), no.3, 2531–2535.

[P1] PINCHUK, S.: *A boundary uniqueness theorem for holomorphic functions of several complex variables*, Mat. Zametki **15** (1974), 205–212.

[P2] PINCHUK, S.: *On proper holomorphic mappings of strictly pseudoconvex domains*, (Russian), Sibirsk. Mat. Z. **15** (1974), 909–917.

[P3] PINCHUK, S.: *On the analytic continuation of holomorphic mappings* (Russian), Mat. Sb. (N.S.) **98(140)** (1975) no.3(11), 375–392, 416–435, 495–496.

[P4] PINCHUK, S.: *Holomorphic mappings of real-analytic hypersurfaces* (Russian), Mat. Sb. (N.S.) **105(147)** (1978), no. 4 574–593, 640.

[PV] PINCHUK, S.; VERMA, K: *Analytic sets and the boundary regularity of CR mappings*, Proc. Amer. Math. Soc. **129** (2001), no.9, 2623–2632.

[Po] PORTEN, E.: *Habilitationsschrift* (In preparation).

[R] REA, C.: *Prolongement holomorphe des fonctions CR, conditions suffisantes*, C. R. Acad. Sci. Paris Sér I Math. **297** (1983), no.3, 163–165.

[Sha] SHAFIKOV, R.: *Analytic continuation of germs of holomorphic mappings between real hypersurfaces in* $\mathbb{C}^n$, Michigan Math. J. **47** (2000), no.1, 133–149.

[SS] SHARIPOV, R.; SUKHOV, A.: *On CR mappings between algebraic Cauchy-Riemann manifolds and separate algebraicity for holomorphic functions*, Trans. Amer. Math. Soc. **348** (1996), no.2, 767–780.

[St1] STANTON, N.: *Infinitesimal CR automorphisms of rigid hypersurfaces of the space of n complex variables*, Amer. J. Math., **117** (1995), no.1, 141-167.

[St2] STANTON, N.: *Infinitesimal CR automorphisms of real hypersurfaces*, Amer. J. Math. **118** (1996), no.1, 209–233.

[Su1] SUKHOV, A.: *On the mapping problem for quadric Cauchy-Riemann manifolds*, Indiana Univ. Math. J. **42** (1993), no.1, 27–36.

[Su2] SUKHOV, A.: *On CR mappings of real quadric manifolds*, Michigan Math. J. **41** (1994), no.1, 143–150.

[Tr1] TRÉPREAU, J.-M.: *Sur le prolongement holomorphe des fonctions CR définies sur une hypersurface réelle de classe $\mathscr{C}^2$ dans $\mathbb{C}^n$*, Invent. Math. **83** (1986), 583–592.

[Tr2] TRÉPREAU, J.-M.: *Sur la propagation des singularités dans les variétés CR*, Bull. Soc. Math. Fr. **118** (1990), no.4, 403–450.

[Tr3] TRÉPREAU, J.-M.: *Holomorphic extension of CR functions: a survey*, Partial differential equations and mathematical physics (Copenhagen, 1995; Lund 1995), 333–355, Progr. Nonlinear Differential Equations Appl., 21, Birkhäuser Boston, Boston, MA, 1996.

[Tu1] TUMANOV, A.E.: *Extending CR functions on a manifold of finite type over a wedge*, (Russian), Mat. Sb. (N.S.) **136(178)** (1988), no.1, 128–139. English transl. in Math. USSR-Sb. **64** (1989) no.1, 129–140.

[Tu2] TUMANOV, A.E.: *Connections and propagation of analyticity for CR functions*, Duke Math. J. **73** (1994), no.1, 1–24.

[Tu3] TUMANOV, A.E.: *On the propagation of extendibility of CR functions*, Complex analysis and geometry (Trento, 1993), 479–498, Lecture Notes in Pure and Appl. Math., **173**, Dekker, New York, 1996.

[V] VERMA, K: *Boundary regularity of correspondences in $\mathbb{C}^2$*, Math. Z. **231** (1999), no.2, 253–299.

[W1] WEBSTER, S.M.: *On the mapping problem for algebraic real hypersurfaces*, Invent. Math. **43** (1977), no.1, 53–68.

[W2] WEBSTER, S.M.: *On the reflection principle in several complex variables*, Proc. Amer. Math. Soc. **71** (1978), no. 1, 26–28.

[W3] WEBSTER, S.M.: *Holomorphic mappings of domains with generic corners*, Proc. Amer. Math. Soc. **86** (1982), no.2, 236–240.

On the partial algebraicity of holomorphic mappings between two real algebraic sets in complex euclidean spaces of arbitrary dimension

Joël Merker

Abstract. The rigidity properties of the local invariants of real algebraic Cauchy-Riemann structures imposes upon holomorphic mappings some global rational properties (Poincaré 1907) or more generally algebraic ones (Webster 1977). Our principal goal will be to unify the classical or recent results in the subject, building on a study of the transcendence degree, to discuss also the usual assumption of minimality in the sense of Tumanov, in arbitrary dimension, without rank assumption and for holomorphic mappings between two arbitrary real algebraic sets.

RÉSUMÉ. La rigidité des invariants locaux des structures de Cauchy-Riemann réelles algébriques impose aux applications holomorphes des propriétés globales de rationalité (Poincaré 1907), ou plus généralement d'algébricité (Webster 1977). Notre objectif principal sera d'unifier les résultats classiques ou récents, grâce à une étude du degré de transcendance, de discuter aussi l'hypothèse habituelle de minimalité au sens de Tumanov, et ce en dimension quelconque, sans hypothèse de rang et pour des applications holomorphes quelconques entre deux ensembles algébriques réels arbitraires.

Bull. Soc. Math. France **129** (2001), no. 3, 547–591

§1. Introduction

The algebraicity or the rationality of local holomorphic mappings between real algebraic CR manifolds can be considered to be one of the most remarkable phenomena in CR geometry. Introducing the consideration of Segre varieties in the historical article [18], Webster generalized the classical rationality properties of self-mappings between three-dimensional spheres discovered by Poincaré and later extended by Tanaka to arbitrary dimension. Webster's theorem states that biholomorphisms between Levi non-degenerate real algebraic hypersurfaces in $\mathbb{C}^n$ are algebraic. Around the eighties, some authors studied proper holomorphic mappings between spheres of different dimensions or between pieces of strongly pseudoconvex real algebraic hypersurfaces, notably Pelles, Alexander, Fefferman, Pinchuk, Chern-Moser, Diederich-Fornaess, Faran, Cima-Suffridge, Forstneric, Sukhov, and others (complete references are provided in [2,5,8,14,16,18,19]). In the past decade, removing the equidimensionality condition in the classical theorem of Webster, Sukhov for mappings between Levi non-degenerate quadrics [16], Huang [8] for mappings between strongly pseudoconvex hypersurfaces, and Sharipov-Sukhov [14] for mappings between general Levi non-degenerate real algebraic CR

manifolds have exhibited various sufficient conditions for the algebraicity of a general local holomorphic map $f\ M \to M'$ between two real algebraic CR manifolds $M \subset \mathbb{C}^n$ and $M' \subset \mathbb{C}^{n'}$. A necessary and sufficient condition, but with a rank condition on f is provided in [2]. Recently, using purely algebraic methods, Coupet-Meylan-Sukhov ([5] ; *see* also [6]) have estimated the transcendence degree of f directly. Building on their work, we aim essentially to study the algebraicity question in full generality (*cf.* Problem 2.4) and to unify the various approaches of [2,5,8,12,14,18,19]. Notably, we shall state necessary and sufficient conditions for the algebraicity of f without rank condition and we shall study the geometry of the minimality assumption thoroughly.

§2. Presentation of the main result

2.1. Algebraicity of holomorphic mappings and their transcendence degree. Let $U \subset \mathbb{C}^n$ be a small nonempty open polydisc. A holomorphic mapping $f\ U \to \mathbb{C}^{n'}$, $f \in \mathscr{H}(U, \mathbb{C}^{n'})$, is called *algebraic* if its graph is contained in an irreducible n-dimensional complex algebraic subset of $\mathbb{C}^n \times \mathbb{C}^{n'}$. Using classical elimination theory, one can show that, equivalently, each of its components $g := f_1, \dots, f_{n'}$ satisfies a nontrivial polynomial equation $g^r a_r + \cdots + a_0 = 0$, the $a_j \in \mathbb{C}[z]$ being polynomials. We recall that a set $\Sigma \subset U$ is called real algebraic if it is given as the zero set in U of a finite number of *real algebraic polynomials* in $(z_1, \dots, z_n, \bar{z}_1, \dots, \bar{z}_n)$.

Let us denote by $\mathscr{A} = \mathbb{C}[z]$ the ring of complex polynomial functions over $\mathbb{C}^n$ and by $\mathscr{R} = \mathbb{C}(z)$ its quotient field $\mathrm{Fr}\,(\mathscr{A})$. By $\mathscr{R}(f_1, \dots, f_{n'})$ we understand the field generated by $f_1, \dots, f_{n'}$ over $\mathscr{R}$, which is a subfield of the field of meromorphic functions over U and which identifies with the collection of rational functions

(2.2)
$$R(f_1, \dots, f_{n'}) = P(f_1, \dots, f_{n'})/Q(f_1, \dots, f_{n'}), \quad P, Q \in \mathscr{R}[x_1, \dots, x_{n'}], \ Q \neq 0.$$

Following [5], the *transcendence degree* $\nabla^{tr}(f)$ of the field $\mathscr{R}(f_1, \dots, f_{n'})$ with respect to the field $\mathscr{R}$ provides an integer-valued invariant measuring the lack of algebraicity of f. In particular, $\nabla^{tr}(f)$ *is zero if and only if* f *is algebraic*. Indeed, by definition $\nabla^{tr}(f)$ coincides with the maximal cardinal number κ' of a subset $\{f_{j_1}, \dots, f_{j_{\kappa'}}\} \subset \{f_1, \dots, f_{n'}\}$, $1 \leq j_1 < \cdots < j_{\kappa'} \leq n'$ which is algebraically independent over $\mathscr{R}$. In other words, $\nabla^{tr}(f) = \kappa'$ means that there exists a subset $\{f_{j_1}, \dots, f_{j_{\kappa'}}\} \subset \{f_1, \dots, f_{n'}\}$ such that there does not exist a nontrivial relation $P(f_{j_1}, \dots, f_{j_{\kappa'}}) \equiv 0$ in $\mathscr{H}(U)$, $P \in \mathscr{R}[x_1, \dots, x_{\kappa'}] \backslash \{0\}$, but that for every λ, $\kappa' + 1 \leq \lambda \leq n'$, every $1 \leq j_1 < \cdots < j_\lambda \leq n'$, there exists an algebraic relation $Q(f_{j_1}, \dots, f_{j_\lambda}) \equiv 0$, $Q \in \mathscr{R}[x_1, \dots, x_\lambda] \backslash \{0\}$. Of course, $\nabla^{tr}(f_1, \dots, f_{n'}) \leq n'$. An equivalent geometric characterization of $\nabla^{tr}(f)$ states that $\nabla^{tr}(f) = \kappa'$ if and only if the *dimension* of the minimal for inclusion *complex algebraic* set $\Lambda_f \subset U \times \mathbb{C}^{n'}$ containing the *graph* $\Gamma_f = \{(z, f(z)) \in U \times \mathbb{C}^{n'}\ z \in U\}$ of f is equal to $n + \kappa'$ (this

complex algebraic set Λ_f is of course necessarily irreducible). In other words, $\nabla^{tr}(f)$ is an invariant intrinsically attached to f which is given with f and which possesses an algebraic *and* a geometric signification. In a metaphoric sense, we can think that $\nabla^{tr}(f)$ measures the *lack of algebraicity* of f, or conversely, that it provides an estimation of the *maximal partial algebraicity properties* of f.

2.3. Presentation of the main result. Then, because the transcendence degree is an appropriate invariant, more general than the dichotomy between algebraic and non-algebraic objects, we shall as in [5] study directly the transcendence degree of holomorphic mappings between two real algebraic sets. Our main goal is to provide a synthesis of the results in [2,5,8,14,18,19]. Thus, quite generally, let $f\ U \to \mathbb{C}^{n'}$ be a local holomorphic mapping sending an arbitrary irreducible real algebraic set $\Sigma \cap U$ into another real algebraic set $\Sigma' \subset \mathbb{C}^{n'}$. As the algebraicity of f is a non-local property, we shall assume in the sequel that $\Sigma \cap U$ is a smooth closed CR-submanifold of U and that there exists a second polydisc $U' \subset \mathbb{C}^{n'}$ with $f(U) \subset U'$ such that $\Sigma' \cap U'$ is also a smoooth closed CR-submanifold of U'. We shall denote by M and M' these connected local CR pieces of Σ in U and of Σ' in U'. Of course, after shrinking again U and U', we can suppose that f is of constant rank over U. The topic of this article is to study in full generality the following problem by seeking an optimal bound:

Problem 2.4 Estimate $\nabla^{tr}(f)$ in terms of geometric invariants of f, Σ, Σ'.

To begin with, we shall first assume that M is somewhere minimal in the sense of Tumanov, as in [2,5,8,14,18,19]. In the sequel, we shall say that a property $\mathscr{P}$ *holds at a Zariski-generic point* $p \in \Sigma$ if there exist a proper real algebraic subset E of Σ, depending on $\mathscr{P}$, such that the property $\mathscr{P}$ holds at each point of $\Sigma \backslash E$. Let Δ be the unit disc in $\mathbb{C}$. Our main result lies in the following statement from which we shall recover every algebraicity result of the cited literature.

Theorem 2.5 Assume that M is CR-generic, connected and minimal in the sense of Tumanov at a Zariski-generic point, and let Σ'' be the minimal (for inclusion, hence irreducible) real algebraic set satisfying $f(M) \subset \Sigma'' \subset \Sigma'$. Let κ' denote the transcendence degree $\nabla^{tr}(f)$ of f. Then near a Zariski-generic point $p'' \in \Sigma''$, there exists a local algebraic coordinate system in which Σ'' is of the form $\Delta^{\kappa'} \times \underline{\Sigma}''$ for some real algebraic variety $\underline{\Sigma}'' \subset \mathbb{C}^{n'-\kappa'}$.

This theorem says that the degree of nonalgebraicity of f imposes some *degeneracy condition* on Σ', namely to contain a smaller real algebraic set Σ'' which is "degenerate" in the sense that it can be locally straightened to be a product by a complex $\nabla^{tr}(f)$-dimensional polydisc at almost every point. The main interest of Theorem 2.5 lies in fact in its various reciprocal forms which are listed in §3 below. Of course, the assumption that $\nabla^{tr}(f)$ equals an integer κ' is no assumption at all, since $\nabla^{tr}(f)$ is automatically

given with f, but in truth abstractly, namely in a non-constructive way, as is Σ''. The only unjustified assumption with respect to Problem 2.4 is the minimality of M in the sense of Tumanov and it remains also to explain why the estimate given by Theorem 2.5 is sharp and satisfactory.

Thus, let us firstly consider the sharpness. If Σ'' is an irreducible real algebraic set as above, it can be shown that there exists the largest integer $\kappa_{\Sigma''}$ such that Σ'' is a product of the form $\Delta^{\kappa_{\Sigma''}} \times \underline{\Sigma}''$ near a Zariski-generic point in suitable local algebraic coordinates (*see* Theorem 9.10). This integer will also be abbreviated by $\kappa_{\Sigma''}$ and we shall say that Σ'' is $\kappa_{\Sigma''}$*-algebraically degenerate*. We shall also write $\Sigma'' \cap V'' \cong_{\mathscr{A}} \Delta^{\kappa_{\Sigma''}} \times \underline{\Sigma}''$ to mean that Σ'' intersected with the small open set V'' is equivalent to a product in *complex algebraic* (abbreviation : $\mathscr{A}$) coordinates. Then Theorem 2.5 states in summary that $\kappa_{\Sigma''} \geq \nabla^{tr}(f)$. With this notion defined and this rephrasing of Theorem 2.5 at hand, we now notice that it can of course well happen that $\kappa_{\Sigma''} > \nabla^{tr}(f)$. For instance, this happens when $n = n'$, when f is an algebraic biholomorphic map, so $\nabla^{tr}(f) = 0$, and when $\Sigma = \Sigma' = \Sigma'' = \mathbb{C}^n$ simply. So what ? In case where $\kappa_{\Sigma''} > \nabla^{tr}(f)$, by an elementary observation we shall show that *a suitable perturbation of f can raise and maximize its possible transcendence degree*. The precise statement, which establishes the desired sharpness, is as follows.

Theorem 2.6 Assume that f is nonconstant and that Σ'' is the minimal for inclusion real algebraic set satisfying $f(M) \subset \Sigma'' \subset \Sigma'$. Remember that Σ'' is locally equivalent to $\Delta^{\kappa_{\Sigma''}} \times \underline{\Sigma}''$ at a Zariski-generic point. Then there exist a point $p \in M$ such that $f(p) =: p'' \in \Sigma''$ is a Zariski-generic point of Σ'' and a local holomorphic self-map ϕ of Σ'' fixing p'' which is arbitrarily close to the identity map, such that $\nabla^{tr}(\phi \circ f) = \kappa_{\Sigma''}$ (of course, because of Theorem 2.5, it is impossible to produce $\nabla^{tr}(\phi \circ f) > \kappa_{\Sigma''}$).

Secondly, let us discuss the (until now still unjustified) minimality in the sense of Tumanov assumption. Remember that CR manifold without infinitesimal CR automorphisms are quite exceptional and in any case carry few self-maps. In §13.2 below, we shall observe the following.

Theorem 2.7 Let M be a nowhere minimal real algebraic CR-generic manifold and assume that the space of infinitesimal CR-automorphisms of M is nonzero. Then M admits a local one-parameter family of nonalgebraic biholomorphic self-maps.

§3. Five corollaries

The direct converse of the main Theorem 2.5 bounds $\nabla^{tr}(f)$ as follows and gives an optimal sufficient condition for f to be algebraic.

Theorem 3.1 Let $f \in \mathscr{H}(U, \mathbb{C}^{n'})$ with $f(M) \subset \Sigma'$ and assume M is CR-generic and minimal at a Zariski-generic point. Then $\nabla^{tr}(f) \leq \kappa_{\Sigma''} =$ algebraic degeneracy degree of the minimal for inclusion real algebraic set Σ'' such that $f(M) \subset \Sigma'' \subset \Sigma'$. In particular, f is necessarily algebraic if

there does not exist an 1-algebraically degenerate real algebraic set Σ''' with $f(M) \subset \Sigma''' \subset \Sigma'$.

As Theorem 2.6 shows that, otherwise, f can be slightly perturbed to be nonalgebraic, this theorem provides a *necessary and sufficient* condition for f to be algebraic. Thanks to this synthetic general converse, we will recover results of the cited litterature as corollaries. We also obtain as a corollary the celebrated algebraicity result in [18] from the following statement.

Corollary 3.2 ([2]) Any biholomorphism between pieces of smooth real algebraic CR-generic holomorphically nondegenerate manifolds in $\mathbb{C}^n$ which are minimal at a Zariski-generic point must be algebraic.

Proof. Let $f\ M \to M'$ biholomorphic. Suppose by contradiction that $\nabla^{tr}(f) = \kappa' \geq 1$. We prove in this paper (Corollary 9.14) that M' is holomorphically degenerate if and only if M' is algebraically degenerate. Since $f(M) \equiv M'$ is locally onto, necessarily $M'' = M'$ is κ'-holomorphically degenerate, by Theorem 2.5, a contradiction. $\square$ $\square$

For instance, here is another more general consequence of Theorem 3.1. By $\mathscr{V}_{\mathbb{C}^n}(p)$, we denote a small open polydisc centered at p whose size may shrink. Let Σ'_{reg} denote the regular part of Σ' in the sense of real algebraic geometry.

Corollary 3.3 Let $f \in \mathscr{H}(U, \mathbb{C}^{n'})$ with $f(M) \subset \Sigma'$ and assume M is CR-generic and minimal at a Zariski-generic point. If $f(M \cap \mathscr{V}_{\mathbb{C}^n}(p))) \supset \mathscr{V}_{\mathbb{C}^{n'}}(f(p) \cap \Sigma'_{reg})$ for some point $p \in M$, then $\Sigma'' = \Sigma'$ and $\nabla^{tr}(f) \leq \kappa_{\Sigma'}$.

Recall now that a CR-generic manifold M is called *Segre-transversal* at $p \in M$ if $\forall\ V = \mathscr{V}_{\mathbb{C}^n}(p)$, $\exists\, k \in \mathbb{N}_*$, $\exists\, q_1, \ldots, q_k \in V \cap S_{\bar{p}}$ such that $T_pS_{\bar{q}_1} + \cdots + T_pS_{\bar{q}_k} = T_p\mathbb{C}^n$, the $S_{\bar{r}}$ denoting Segre varieties, hence $p \in S_{\bar{q}_1}, \ldots, p \in S_{\bar{q}_k}$. Segre-transversal M's are always minimal. In fact, Segre-transversality at $p \in M$ appears to be equivalent to minimality at p (*see* [5]) in codimension one, when M is a hypersurface, but in codimension ≥ 3 there exist already some minimal and not Segre-transversal (M, p)'s. Since the question whether minimal CR-generic manifolds (M, p) of codimension two are Segre transversal was left open in [5], we devote §10 to answer it affirmatively. Now, another important and direct consequence of our main Theorem 2.5 is the following statement, implying in particular [8].

Corollary 3.4 ([5]) Let $f \in \mathscr{H}(U, \mathbb{C}^{n'})$ with $f(M) \subset \Sigma'$ and assume that M is Segre-transversal at p. Then $\nabla^{tr}(f) \leq m' :=$ the maximal dimension of a complex algebraic variety $A'_{f(q)}$ with $f(q) \in A'_{f(q)} \subset \Sigma'$, where q runs in M.

Proof. First, M is minimal at p ([5]; *see* also §14 here). Clearly, if $\kappa' = \nabla^{tr}(f)$, then Σ' contains a piece of algebraic set $A' \cong_{\mathscr{A}} \Delta^{\kappa'}$ by Theorem 2.5, so $\kappa' \leq m'$. $\square$ $\square$

A fourth consequence of Theorem 3.1 is :

Corollary 3.5 ([19]) Let $f \in \mathscr{H}(U, \mathbb{C}^{n'})$ with $f(M \cap U) \subset \Sigma'$ and assume that M is minimal at a Zariski-generic point. If Σ' does not any contain complex algebraic varieties, then $\nabla^{tr}(f) = 0$, i.e. f is algebraic.

Proof. As above, if $\kappa' = \nabla^{tr}(f) \geq 1$, then $M' \supset A' \cong_{\mathscr{A}} \Delta^{\kappa'}$. $\square$ $\square$

In conclusion, we therefore unify the results in the papers [2,5,8,14,18,19].

3.6. Second reflection. Let $f\ M \to M'$, $M\ \rho(z, \bar{z}) = 0$, $0 \in M$, $M'\ \rho'(z', \bar{z}') = 0$, $0 \in M'$, ρ, ρ' real algebraic polynomials : $\rho \in \mathbb{C}[z, \bar{z}]^d$, $\rho' \in \mathbb{C}[z', \bar{z}']^{d'}$, $d = \text{codim}_{\mathbb{R}} M$, $d' = \text{codim}_{\mathbb{R}} M'$, and let $S_{\bar{w}}$, $S'_{\bar{w}'}$ denote Segre varieties, $w \in \mathscr{V}_{\mathbb{C}^n}(0) := U$, $w' \in \mathscr{V}_{\mathbb{C}^{n'}}(0) := U'$, $S_{\bar{w}} := \{z \in U\ \rho(z, \bar{w}) = 0\}$, $S'_{\bar{w}'} := \{z' \in U'\ \rho'(z', \bar{w}') = 0\}$. Following [7,10,19], for every subset $E' \subset U'$, we define the *first* and the *second reflection* of E' (which appears in an article of Diederich-Fornaess, Ann. Math. **107** (1978), 371–384) by

$$r_{M'}(E') := \{w' \in U'\ S'_{\bar{w}'} \supset E'\}, \qquad r^2_{M'}(E') := r_{M'}(r_{M'}(E')). \tag{3.7}$$

One establishes easily that given $f\ M \to M'$, then (*see* [10]) :

$$f(z) \in \mathbb{X}'_{z,\bar{w}} := r_{M'}(f(S_{\bar{z}})) \cap r^2_{M'}(f(S_{\bar{w}})). \tag{3.8}$$

Although the paper [19] contains a slightly different statement using the double reflection determination (3.8), we shall summarize its main theorem by the following statement :

$$\left\langle \dim_{\mathbb{C}} \mathbb{X}'_{z,\bar{w}} = 0 \quad \forall\, z, w \in \mathscr{V}_{\mathbb{C}^n}(0), \text{ with } z \in S_{\bar{w}} \right\rangle \ \Rightarrow\ \nabla^{tr}(f) = 0. \tag{3.9}$$

In fact, to review the version [10], the condition $\dim_{\mathbb{C}} \mathbb{X}'_{z,\bar{w}} = 0\ \forall\, z, w \in \mathscr{V}_{\mathbb{C}^n}(0), z \in S_{\bar{w}}$, yields easily that f is algebraic on every Segre variety $S_{\bar{w}}$ and it suffices afterwards to apply Theorem 5.1 below to get $\nabla^{tr}(f) = 0$. But the main point here is again that, contrary to the one in Theorem 2.5, *this condition* (3.9) *is only sufficient*. Indeed, it appears that there is no natural reason why there should exist a nonalgebraic perturbation $\phi \circ f$ as in Theorem 2.6 in case where $\dim_{\mathbb{C}} \mathbb{X}'_{z,\bar{w}} \geq 1$ for all z, w, $z \in S_{\bar{w}}$. For instance, there are cases where $\dim_{\mathbb{C}} \mathbb{X}'_{z,\bar{w}} \geq 1\ \forall\, z, w \in \mathscr{V}_{\mathbb{C}^n}(0), z \in S_{\bar{w}}$, but a suitable modification of the method in [7,10,19] yields another determinacy set $\mathbb{M}'_{z,\bar{w}}$ such that $f(z) \in \mathbb{M}'_{z,\bar{w}}$ again, such that $\dim_{\mathbb{C}} \mathbb{M}'_{z,\bar{w}} = 0$ $\forall\, z, w \in \mathscr{V}_{\mathbb{C}^n}(0), z \in S_{\bar{w}}$ and such that, moreover, $\mathbb{M}'_{z,\bar{w}}$ is also appropriate for showing that f is algebraic as in (3.9) above. By examples similar to the ones in [10], it can be shown that neither the condition $\dim_{\mathbb{C}} \mathbb{X}'_{z,\bar{w}} \geq 1$ $\forall\, z, w \in \mathscr{V}_{\mathbb{C}^n}(0), z \in S_{\bar{w}}$, nor $\dim_{\mathbb{C}} \mathbb{M}'_{z,\bar{w}} \geq 1\ \forall\, z, w \in \mathscr{V}_{\mathbb{C}^n}(0), z \in S_{\bar{w}}$ mean that we can find a nonalgebraic perturbation $\phi \circ f$: both conditions are *only sufficient*. Further, the preprints [7,10] explains the unexpected phenomena which are caused by the action of second reflection $r^2_{M'}$. By an examination of the examples in [10], the reader can realize that *the trouble in them comes from the fact that M' is not a priori a piece of the minimal*

for inclusion real algebraic set Σ'' *containing* $f(M)$. And we can add that these puzzling phenomena are essentially due to the fact that $r_{M'}$ *reverses inclusion of sets*: $E' \subset F'$ implies $r_{M'}(E') \supset r_{M'}(F')$ and for this reason, $E' \cap r_{M'}(E')$ and $F' \cap r_{M'}(F')$ cannot be comparable *a priori*. For instance, if $f(M) \subset M'' \subset M'$ are as above, one has $r_{M'}(f(S_{\bar z})) \subset r_{M''}(f(S_{\bar z}))$ but the two double reflection sets

(3.10)

$$\mathbb{X}'_{z,\bar w} := r_{M'}(f(S_{\bar z})) \cap r^2_{M'}(f(S_{\bar w})) \quad \text{and} \quad \mathbb{X}''_{z,\bar w} := r_{M''}(f(S_{\bar z})) \cap r^2_{M''}(f(S_{\bar w}))$$

are *not comparable* in general. Explicit examples showing that one can play very freely with these inclusions are given in [7,10]. This shows that it is more natural to have a condition about $\mathbb{X}''_{z,\bar w}$ with M'' being a piece of the minimal for inclusion real algebraic set Σ'' which is *smooth*. We can of course assume smoothness after shrinking M and U a little bit, since if otherwise $f(M)$ is contained in the (real algebraic) singular part of Σ'' then Σ'' is not minimal for inclusion. Finally, after assuming that M' is already minimal for inclusion, we can derive quickly from our Theorem 2.5 the contraposition of Theorem 1.1 in [19].

Corollary 3.11 Let $f \in \mathscr{H}(U, \mathbb{C}^{n'})$, $f(M) \subset M'$, with M CR-generic and minimal at a Zariski-generic point. Assume that M' is minimal for inclusion real algebraic CR-generic containing $f(M)$ and smooth. If $\nabla^{tr}(f) \geq 1$, then there exists $D_M \subset M \cap U$ a Zariski-open subset of M such that $\forall\, p \in D_M$, $\dim_{\mathbb{C}} \mathbb{X}'_{z,\bar w} \geq \nabla^{tr}(f) \geq 1$, $\forall\, z, w \in \mathscr{V}_{\mathbb{C}^n}(p)$, $z \in S_{\bar w}$. Equivalently, if $\dim_{\mathbb{C}} \mathbb{X}'_{z,\bar w} = 0$ on an open set, then f is algebraic. In particular, if $\dim_{\mathbb{C}} r_{M'}(f(S_{\bar z})) = 0$ on a open set, then f is algebraic.

Proof. Let $\kappa' := \nabla^{tr}(f)$. By Theorem 2.5, M' is at least κ'-algebraically degenerate, *i.e.* $\kappa_{M'} \geq \kappa'$. Then $(M', p') \cong_{\mathscr{A}} \Delta^{\kappa_{M'}} \times \underline{M'}$ locally in a neighborhood of a Zariski-generic point $p' \in M'$. Let D_M be the open set of points $p \in M \cap U$ such that $M' \cap \mathscr{V}_{\mathbb{C}^{n'}}(f(p)) \cong_{\mathscr{A}} \Delta^{\kappa_{M'}} \times \underline{M'}$. Since M' is minimal for inclusion, we claim that D_M is Zariski-open in $M \cap U$. Indeed, otherwise, $f(M \cap U)$ would be contained in the set of points $p' \in M'$ where $M' \cap \mathscr{V}_{\mathbb{C}^{n'}}(p') \ncong_{\mathscr{A}} \Delta^{\kappa_{M'}} \times \underline{M'}$, which is a *proper* real algebraic subvariety of M' *see* Theorems 9.10 and 9.16 below, contradicting the choice of M'. Assume therefore that $M' = \Delta^{\kappa_{M'}} \times \underline{M'}$ in $U' = \mathscr{V}_{\mathbb{C}^n}(0)$. Let $\pi'\, \mathbb{C}^{n'} \to \mathbb{C}^{n'-\kappa_{M'}} \times 0$ be the projection. It is easy to show that for an arbitrary set $E' \subset U'$, we have

(3.12)

$$r_{M'}(E') = r_{\underline{M'}}(\Delta^{\kappa_{M'}} \times \pi'(E')), \qquad r^2_{M'}(E') = r_{\underline{M'}}(r_{\underline{M'}}(\Delta^{\kappa_{M'}} \times \pi'(E'))).$$

Consequently, $\mathbb{X}'_{z,\bar w} \supset \Delta^{\kappa_{M'}} \times \pi'(f(z))$ and $\dim_{\mathbb{C}} \mathbb{X}'_{z,\bar w} \geq \kappa_{M'} \geq \kappa' = \nabla^{tr}(f) \geq 1$. $\square$ $\square$

3.12. Summary of the proof of Theorem 2.5. Let $\nabla^{tr}(f) =: \kappa'$. Equivalently, the graph of f is contained in an algebraic $(n+\kappa')$-dimensional manifold in $\mathbb{C}^n \times \mathbb{C}^{n'}$ and some κ' components of f, say $(f_1, \ldots, f_{\kappa'}) := f_{(\kappa')}$, make a transcendence basis of the field extension $\mathscr{R} \to \mathscr{R}(f_1, \ldots, f_{n'})$. By

the assumption $f(M) \subset \Sigma'$, there exist algebraic relations between f and $\bar{f}$ and then between $f_{(\kappa')}$ and $\bar{f}_{(\kappa')}$, after elimination. The main argument in §4 below shows that an algebraic dependence $R'(z, \bar{z}, f_{(\kappa')}(z), \bar{f}_{(\kappa')}(\bar{z})) \equiv 0$, for $z \in M$, can be transformed into an algebraic dependence $S'(z, f_{(\kappa')}) \equiv 0$ *which does not involve the antiholomorphic components* in case (M, p) is minimal. This fact strongly relies on the Theorem 8.2 about propagation of partial algebraicity along the Segre surfaces of (M, p). Then $S' \equiv 0$, and this will show easily that the set Σ'' is κ'-algebraically degenerate.

3.13. Organization of the article. §4 provides the proof of Theorem 2.5, except the theorem on propagation of algebraicity, to which §5, §6, §7 and §8 are devoted. §7 contains the proof of Theorem 2.7. §9 presents the notion of algebraic degeneracy. §10 studies the notion of Segre-transversality in the real algebraic context. Finally, §11 shows how to produce a statement equivalent to our main Theorem 2.5 using the so-called reflection mapping.

3.14. Acknowledgement. Since I use transcendence degree in this paper, I would like to thank Bernard Coupet, Francine Meylan and Alexander Sukhov, who kindly provided me with their joint work in February 1998, and I wish to address special thanks to Alexander for several interesting discussions. Also, I have benefited of fruitful conversations about the jet method with Bernard Coupet and Sylvain Damour. Finally, I wish to thank the referee for his clever help.

§4. Estimate of transcendence degree

4.1. Necessity in the main theorem. We proceed here first to the proof of the easy Theorem 2.6. Thanks to the existence of algebraic stratifications and thanks to delocalization (*i.e.* choice of a smaller U centered at Zariski-generic point), we reduce the problem to a *nonconstant* holomorphic map $f M \to \Delta^{\kappa'} \times \underline{\Sigma}''$, $\kappa' \geq 1$. To begin with, assume first that f is algebraic, that $p = 0$ and $f(p) = 0$. We write $f = (\underline{f}_1, \ldots, \underline{f}_{n''}, f_1, \ldots, f_{\kappa'})$. Obviously, all perturbations $(\underline{f}_1, \ldots, \underline{f}_{n''}, g_1, \ldots, g_{\kappa'})$ of f, where the map $g \mathscr{V}_{\mathbb{C}^n}(0) \to \Delta^{\kappa'}$, $g(0) = 0$, is an arbitrary holomorphic map, *still send* M *into* $\Delta^{\kappa'} \times \underline{\Sigma}''$. We need to find such a perturbation of the form $\phi \circ f$ with transcendence degree κ'.

Because Σ'' is assumed to be minimal for inclusion containing $f(M)$, we have $f_1 \not\equiv 0$. Next, we choose a transcendent entire holomorphic function with high order of vanishing $\varpi\ \Delta \to \Delta$, $\varpi(0) = 0$, say for instance $\varpi(z_1) = (\sin z_1)^a$, $a \in \mathbb{N}_*$, $a >> 1$, and we define the map $\phi\, \Delta^{\kappa'} \times \underline{\Sigma}'' \to \Delta^{\kappa'} \times \underline{\Sigma}''$ by $\phi(\underline{z}_1, \ldots, \underline{z}_{n''}, z_1, \ldots, z_{\kappa'}) := (\underline{z}_1, \ldots, \underline{z}_{n''}, z_1 + \varpi(z_1), z_2 + \varpi^{\circ 2}(z_1), \ldots, z_{\kappa'} + \varpi^{\circ \kappa'}(z_1))$, where we denote $\varpi^{\circ k} := \varpi \circ \cdots \circ \varpi$ (k times). Then we have $\nabla^{tr}(\varpi, \varpi^{\circ 2}, \ldots, \varpi^{\circ k}) = k$ for all $k \in \mathbb{N}_*$ and $\phi \circ f = (\underline{f}_1, \ldots, \underline{f}_{n''}, f_1 + \varpi(f_1), \ldots, f_{\kappa'} + \varpi^{\circ \kappa'}(f_1))$. If f was algebraic, then clearly $\nabla^{tr}(\phi \circ f) \geq \kappa'$ and the rank at $0 \in \mathbb{C}^n$ (or the generic rank) of

f is preserved after composition by ϕ, because ϕ is arbitrarily close to the identity map in a neighborhood of the origin.

Now, if f was not algebraic, we choose instead functions $\varpi_1, \dots, \varpi_{\kappa'}$ $\Delta \to \Delta$ with high order of vanishing at 0 such that $\nabla^{tr}(f_1 + \varpi_1(f_1), f_2 + \varpi_2(f_1), \dots, f_{\kappa'} + \varpi_{\kappa'}(f_1)) = \kappa'$, which is possible. Then again $\nabla^{tr}(\phi \circ f) \geq \kappa'$. $\square$

4.2. Sufficiency in the main theorem. We establish here Theorem 2.5. This paragraph will essentially follow the lines of the main argument given in [5]. Let $\kappa' := \nabla^{tr}(f)$ and choose a point $p \in M$ at which M is minimal such that Σ'' is smooth (in the sense of real algebraic geometry) and CR at $f(p)$. This choice can be simply achieved by avoiding some two proper real algebraic subvarieties in the source and in the target. Of course, the real algebraic set Σ'' which is minimal for inclusion satisfying $f(M) \subset \Sigma'' \subset \Sigma'$ is irreducible and $f(M)$ is not contained in Σ''_{sing}. Suppose we have proved that Σ'' is κ'-algebraically at $f(p)$. Then Theorem 9.10 below yields that $\Sigma''_{reg,CR}$ is κ'-algebraically degenerate everywhere. We are thus reduced to prove Theorem 2.6 at one point. To summarize, thanks to the above simplifications, it is clear that it suffices now to establish the following local statement.

Theorem 4.3 Assume that f $(M, p) \to (M', p')$ is a holomorphic map of constant rank between two smooth CR-generic small manifold pieces of real algebraic sets and let $\kappa' := \nabla^{tr}(f)$. If (M, p) is minimal and (M', p') minimal for inclusion containing $f(M, p)$, then (M', p') is at least κ'-algebraically degenerate.

Proof. For basic definitions about algebraic or transcendental extensions that will be needed in this demonstration, we refer the reader to §2 of [5] and the references therein. We only recall the following important lemma. If k is a subfield of a field E, then E is said to be an *extension field of* k. We write $k \to E$.

Lemma 4.4 Let $E = k(\alpha_1, \dots, \alpha_n)$ be a finite extension of a field k, $n \in \mathbb{N}_*$, consisting of rational functions of $(\alpha_1, \dots, \alpha_n)$ with coefficients in k. Then $\nabla^{tr}(k \to E) = \kappa' \geq 1$ if and only if, after renumbering :

- "**(1)**" α_1 is transcendent over k, $\cdots$, $\alpha_{\kappa'}$ is transcendent over $k(\alpha_1, \dots, \alpha_{\kappa'-1})$;
- "**(2)**" $\alpha_{\kappa'+1}, \dots, \alpha_n$ are algebraic over $k(\alpha_1, \dots, \alpha_{\kappa'})$.

Let $\mathscr{R} := \mathrm{Fr}(\mathscr{A}) = \mathbb{C}(z)$ denote the quotient field of the ring of algebraic functions $\mathscr{A} := \mathbb{C}[z]$ over $\mathbb{C}^n$ and let us consider $\mathscr{R}(f_1, \dots, f_{n'})$, the field of rational functions generated by the components $f_1, \dots, f_{n'}$ of f, *i.e.* by fractions of the form

(4.5)
$$\frac{P(f_1, \dots, f_{n'})}{Q(f_1, \dots, f_{n'})}, \quad P(f_1, \dots, f_{n'}) = \sum_J a_J f^J, \quad Q(f_1, \dots, f_{n'}) = \sum_J b_J f^J,$$

P and Q being polynomials with coefficients $a_J \in \mathscr{R}$, $b_J \in \mathscr{R}$. If κ' denotes the transcendence degree of the field extension $\mathscr{R} \to \mathscr{R}(f)$, one can assume (after renumbering) that $f_1, \dots, f_{\kappa'}$ is the basis of transcendence, which means (*cf.* 4.4)

- "**1.**" f_1 is transcendent over $\mathscr{R}$, ..., $f_{\kappa'}$ is transcendent over $\mathscr{R}(f_1, \dots, f_{\kappa'-1})$;
- "**2.**" $f_{\kappa'+1}, \dots, f_{n'}$ are algebraic over $\mathscr{R}(f_1, \dots, f_{\kappa'})$.

In particular **1** implies that there are no algebraic relations between $(f_1, \dots, f_{\kappa'})$. Let us denote $f_{(\kappa')} := (f_1, \dots, f_{\kappa'})$. Also, **2** means that there are irreducible monic polynomials

(4.6)
$$S'_{\kappa'+1}(z, f_{(\kappa')}; X) \in \mathscr{R}(f_{(\kappa')})[X], \dots, S'_{n'}(z, f_{(\kappa')}; X) \in \mathscr{R}(f_{(\kappa')})[X]$$

such that writing

(4.7)
$$S'_j = \sum_{0 \le k \le m_j} S'_{jk}(z, f_{(\kappa')}) X^{m_j - k}, \quad S'_{j0} = 1, \quad \text{one has} \quad S'_j(z, f_{(\kappa')}; f_j(z)) \equiv 0$$

identically for $z \in U$, $j = \kappa' + 1, \dots, n'$ with $S'_{jk}(z, f_{(\kappa')}) \in \mathscr{R}(f_{(\kappa')})$. In other words, the graph of f

(4.8)
$$\Gamma(f) = \Gamma(f_1, \dots, f_{n'}) = \{(z, z') \in \mathbb{C}^n \times \mathbb{C}^{n'};\ z'_1 = f_1(z), \dots, z'_{n'} = f_{n'}(z), z \in U\}$$

is contained in the complex algebraic set

$$\begin{aligned} \Lambda' = \{(z, z') \in \mathbb{C}^n \times \mathbb{C}^{n'};\ S'_j(z, z'_{(\kappa')}; z'_j) = 0, \\ j = \kappa' + 1, \dots, n', z \in U, z' \in U'\} \subset \mathbb{C}^n \times \mathbb{C}^{n'}, \end{aligned} \tag{4.9}$$

equipped with a natural projection $\tau' \mathbb{C}^n \times \mathbb{C}^{n'} \to \mathbb{C}^n \times \mathbb{C}^{\kappa'}$, which is a local algebraic biholomorphism $\tau' \Lambda' \backslash (\tau')^{-1}(\Upsilon') \to \mathbb{C}^n \times \mathbb{C}^{\kappa'}$ outside the inverse image $(\tau')^{-1}(\Upsilon')$ of the union Υ' of the discriminant loci of the irreducible polynomials S'_j (hence Υ' is a complex algebraic subset of $\mathbb{C}^n \times \mathbb{C}^{\kappa'}$ of dimension $\le n + \kappa' - 1$).

Consider now the graph of the transcendent basis

(4.10)
$$\Gamma(f_1, \dots, f_{\kappa'}) = \{(z, z'_{(\kappa')}) \in \mathbb{C}^n \times \mathbb{C}^{\kappa'};\ z'_1 = f_1(z), \dots, z'_{\kappa'} = f_{\kappa'}(z), z \in U\}.$$

Lemma 4.11 For any nonempty open set $V_M \subset M$, one has

$$\Gamma(f_1, \dots, f_{\kappa'})|_{V_M} \not\subset \Upsilon'. \tag{4.12}$$

Proof. Assuming $V_M = V \cap M$ with both $V \subset \mathbb{C}^n$ and $V_M \subset M$ connected, it would imply $\Gamma(f_1, \dots, f_{\kappa'})|_V \subset \Upsilon'$ (identity principle), so there would be a nontrivial algebraic relation between $f_1, \dots, f_{\kappa'}$. □ □

After delocalization, we then have $(p, f_{(\kappa')}(p)) \notin \Upsilon'$ for all $p \in U$, so the complex algebraic set Λ' in $U \times U'$ can be locally defined by equations of the form

$$z'_{\kappa'+1} = h'_{\kappa'+1}(z, z'_1, \dots, z'_{\kappa'}), \dots, z'_{n'} = h'_{n'}(z, z'_1, \dots, z'_{\kappa'}), \tag{4.13}$$

using the algebraic implicit function theorem, where the h'_j are *holomorphic algebraic* functions, *i.e.* holomorphic functions whose graph is contained in a complex algebraic set of dimension $n + \kappa'$.

By hypothesis, M' is given by real polynomial equations $P'_j(z', \bar{z}') = 0, j = 1, \dots, \sigma'$, near p' and we have $P'_j(f(z), \bar{f}(\bar{z})) \equiv 0$ for $z \in M$. As in classical elimination theory, we can replace the variables $z'_{\kappa'+1}, \bar{z}'_{\kappa'+1}, \dots, z'_{n'}, \bar{z}'_{n'}$ by the above values (4.13) and their conjugate values (the h'_j satisfy polynomial equations, so consider the other "conjugate" roots of these polynomials), take the product of these equations, use Newton's identities and get that $\pi'(f(M)) = f_{(\kappa')}(M)$ is contained in a real algebraic set with polynomial equations $R'_j(z, \bar{z}, z'_1, \dots, z'_{\kappa'}, \bar{z}'_1, \dots, \bar{z}'_{\kappa'}) = 0$, $j = 1, \dots, \sigma'$. We thus have

$$R'_j(z, \bar{z}, f_{(\kappa')}(z), \bar{f}_{(\kappa')}(\bar{z})) \equiv 0, \quad j = 1, \dots, \sigma', \ z \in M. \tag{4.14}$$

In summary, insofar we have eliminated the relatively algebraic components $f_{\kappa'+1}, \dots, f_{n'}$ and we are now left with some algebraic relations between the transcendence basis and its conjugate, namely (4.14) above. *The crucial Proposition 4.16 below shows that all $R'_j \equiv 0$ necessarily*. We then claim that this fact will readily imply that M' contains (and is equal, by minimality for inclusion) a κ'-algebraically degenerate set like in Theorems 2.5 and 4.3.

Indeed, as $R'_j \equiv 0$, $1 \leq j \leq \sigma'$, then for each $z \in M$, the κ'-dimensional algebraic manifold $A'_z = \{z'_j = h'_j(z, z_{(\kappa')}), \ j = \kappa' + 1, \dots, n'\}$ is contained in M'. Let $\pi' \ (z, z') \mapsto z'$. Then the set of complex algebraic A'_z parameterized by $z \in U$

$$\mathscr{C} = \{(z, z'_{(\kappa')}, h'_{(n'-\kappa')}(z, z'_{(\kappa')}))\} \subset U \times U' \tag{4.15}$$

algebraically projects *via* π' into M', whenever $z \in M$. The fibers of $\pi'|_{\mathscr{C}}$ only depend on z, so there exists an algebraic submanifold N of M where π' has constant rank and $\pi' \ \mathscr{C} \cap (N \times U') \to M'$ is an algebraic real diffeomorphism by minimality of M' for inclusion. Let $Q_j(z, \bar{z}) = 0$, $j = 1, \dots, \mu$ be some local real polynomial equations for N. As $\mathscr{C} \cap (N \times U')$ is given by the equations $Q_j(z, \bar{z}) = 0$, $z'_{(n'-\kappa')} = h'_{(n'-\kappa')}(z, z'_{(\kappa')})$, the local algebraic biholomorphism defined by $\tilde{z}_{(n'-\kappa')} := z'_{(n'-\kappa')} - h'_{(n'-\kappa')}(z, z'_{(\kappa')})$, $\tilde{z}'_{(\kappa')} := z'_{(\kappa')}$, $\tilde{z} := z$ clearly straightens $\mathscr{C} \cap (N \times U')$ to be the product of the real algebraic manifold $\{(\tilde{z}, \tilde{z}'_{(n'-\kappa')}) \ Q_j(\tilde{z}, \bar{\tilde{z}}) = 0, \ j = 1, \dots, \mu, \ \tilde{z}'_{(n'-\kappa')} = 0\}$ by the κ'-dimensional local polydisc $\{(0, \tilde{z}'_{(\kappa')}, 0)\}$. As $\pi' \ \mathscr{C} \cap (N \times U') \to M'$ is an algebraic CR-diffeomorphism, this shows that M' is at least κ'-algebraically

degenerate. Granted Proposition 4.16 below, then Theorem 4.3 will be proved. □ □

It remains to show that no algebraic relation can be satisfied by the transcendence basis $f_{(\kappa')}$ together with its conjugate $\bar{f}_{(\kappa')}$. This is where the reflection principle and the minimality of M come on scene.

Proposition 4.16 Let $g := (g_1, \ldots, g_{\kappa'})$, with $g_j(z)$ holomorphic in U. Assume that $\nabla^{tr}(g) = \kappa'$. Then any polynomial relation satisfied by g and $\bar{g}$ over the field of rational functions is trivial, namely $R(z, \bar{z}, g(z), \bar{g}(\bar{z})) \equiv 0$, $z \in M$, implies $R \equiv 0$.

Proof. Let us proceed by contradiction. Then there exists an integer $\mu \in \mathbb{N}_*$, such that we can write $R(z, \bar{z}, g, \bar{g}) = \sum_{1 \leq i \leq \mu} g^{\alpha_i}\, r_i(z, \bar{z}, \bar{g})$ where $\alpha_i \in \mathbb{N}^{\kappa'}$ and where $r_i \neq 0$ for $i = 1, \ldots, \mu$ and such that $R(z, \bar{z}, g(z), \bar{g}(\bar{z})) \equiv 0$, for $z \in M$. Here, R and the r_i's are polynomial. Of course, we can assume that μ is the minimal integer for such a property. We shall use the minimality of μ to derive the contradiction. Here, since the $r_i(z, \bar{z}, \bar{g})$ are nonzero polynomials in $(z, \bar{z}, \bar{g})$, then for z running in U, the terms $r_i(z, \bar{z}, \bar{g}(\bar{z}))$ (pull-back to M) can be considered, after obvious reordering, as *polynomials in z with coefficients being holomorphic functions of $\bar{z}$* (we loose algebraicity in $\bar{z}$, because the terms $\bar{g}(\bar{z})$ are only holomorphic). We can thus write them as $r_i(\bar{z}; z) := \sum_J a_{i,J}(\bar{z})\, z^J$, where such a sum is understood to be finite. By minimality of μ, necessarily no $r_i(\bar{z}; z)$ vanishes identically on M. For $i = 2, \ldots, \mu$, we can set $t_i(\bar{z}; z) := r_i(\bar{z}; z)/r_1(\bar{z}; z)$, which are terms of the form $\sum_J a_{i,J}(\bar{z})\, z^J / (\sum_J a_{1,J}(\bar{z})\, z^J)$ and each sum is finite. Then we have the following relation for z running over the Zariski open subset $D_M := \{r_1 \neq 0\}$ of M:

$$g^{\alpha_1}(z) + \sum_{2 \leq i \leq \mu} t_i(\bar{z}; z)\, g^{\alpha_i}(z) \equiv 0, \quad z \in D_M. \tag{4.17}$$

Now, let $\bar{L}_1, \ldots, \bar{L}_m$ be a basis of $T^{0,1}M$ with polynomial coefficients, where $m = \dim_{CR} M$. Of course, since $g(z)$ is holomorphic, $\bar{L}_k(g_i) \equiv 0$ on M, for all $1 \leq k \leq m$ and $1 \leq i \leq \kappa'$. Applying these CR derivations to (4.17), we then see that the term $g^{\alpha_1}(z)$ is automatically killed. We therefore come to a dichotomy. Either $\bar{L}_k(t_i(\bar{z}; z)) \equiv 0$, for all $1 \leq k \leq m$ and all $2 \leq i \leq \mu$, $z \in D_M$, or there exists $1 \leq k_* \leq m$ and $2 \leq i_* \leq \mu$ such that $\bar{L}_{k_*}(t_{i_*}(\bar{z}; z)) \not\equiv 0$ on M. But this last possibility would readily contradict the minimality of μ. Indeed, as the coefficients of the $\bar{L}_k$'s are polynomial in $(z, \bar{z})$, all the terms $\bar{L}_{k_*}(t_i(\bar{z}; z))$ are still of the relatively rational form $\sum_J c_{i,J}(\bar{z})\, z^J / (\sum_J d_{i,J}(\bar{z})\, z^J)$ and after applying the CR derivation $\bar{L}_{k_*}$ to (4.17), and after chasing the denominators, we would obtain a similar polynomial relation $\sum_{2 \leq i \leq \mu} g^{\alpha_i}(z)\, r'_i(\bar{z}; z) \equiv 0$, $z \in M$, $r'_i(\bar{z}, z) = \sum_J e_{i,J}(\bar{z})\, z^J$, with a number $\mu_1 \leq \mu - 1$ of terms strictly less than μ, and this relation is *nontrivial*, because $\bar{L}_{k_*}(t_{i_*}(\bar{z}; z)) \not\equiv 0$,

which yields a contradiction in this case. Thus, we are left to discuss the first possibility, where $\bar{L}_k(t_i(\bar{z};z)) \equiv 0$, for all $1 \leq k \leq m$ and all $2 \leq i \leq \mu$, $z \in D_M$. This case means that the real analytic $t_i(\bar{z};z)$'s are smooth and CR over D_M. Hence they admit a holomorphic extension $s_i(z)$ to a neighborhood of D_M in $\mathbb{C}^n$. The important Proposition 4.18 below shows that this holomorphic extension is in fact *holomorphic algebraic*. But then relation (4.17) gives $g^{\alpha_1}(z) + \sum_{2\leq i\leq\mu} s_i(z)\, g^{\alpha_i}(z) \equiv 0$, for $z \in D_M$, which is a nontrivial algebraic relation between $(g_1, \dots, g_{\kappa'})$, with $\nabla^{tr}(g_1, \dots, g_{\kappa'}) = \kappa'$: this is again a contradiction. Granted Proposition 4.18 below, then Proposition 4.16 will be proved. $\square$ $\square$

Proposition 4.18 If M is minimal at a Zariski-generic point and a relatively rational with respect to z function $t(\bar{z};z) := \sum_J a_J(\bar{z})\, z^J / (\sum_J b_J(\bar{z})\, z^J)$, where the coefficients $a_J(\bar{z})$ and $b_J(\bar{z})$ are holomorphic with respect to $\bar{z}$, is CR on a Zariski open subset D_M of M, then its holomorphic extension $s(z)$ to a neighborhood of D_M in $\mathbb{C}^n$ is algebraic.

Proof. We localize first at a minimal point of D_M. Now assuming the equation of M is given by some local equations as in §6.1 below, we split the old coordinates z in the new coordinates $(w,z) \in \mathbb{C}^m \times \mathbb{C}^d$ and we complexify the equality $s(w, \bar{z} + i\bar{\Theta}(w,\bar{w},\bar{z})) \equiv \sum_{I,J} a_{I,J}(\bar{w},\bar{z})\, w^I z^J / (\sum_{I,J} b_{I,J}(\bar{w},\bar{z})\, w^I z^J)$, where each sum is finite, which is valuable for $(w,z) \in D_M$, to obtain

(4.19)
$$s(w,\xi+i\bar{\Theta}(w,\zeta,\xi)) \equiv \left[\sum_{I,J} a_{I,J}(\zeta,\xi)\, w^I z^J \Big/ \left(\sum_{I,J} b_{I,J}(\zeta,\xi)\, w^I z^J \right) \right]_{z:=\xi+i\bar{\Theta}(w,\zeta,\xi)}$$

identically on the extrinsic complexification $\mathscr{M}$, *i.e.* identically as power series in (w,ζ,ξ). Of course, to complexify, we use the fact that $M = \mathscr{M} \cap \{\zeta = \bar{w}, \xi = \bar{z}\}$ is maximally real in $\mathscr{M}$, hence a uniqueness set. Then (4.19) shows that s is algebraic on each Segre surface $\mathscr{S}_{\zeta_p,\xi_p}$ and $\underline{\mathscr{S}}_{w_p,z_p}$ of $\mathscr{M}$, *see* (6.4) for their definition. We shall prove in Theorem 5.1 below that a holomorphic function defined in a neighborhood of a minimal CR-generic manifold is algebraic if and only if all its restrictions to Segre varieties are algebraic. Therefore s is algebraic, as desired. Granted Theorem 5.1 below, this will complete the proof of Theorem 4.3. $\square$ $\square$

§5. Vector fields with complex algebraic flow and partial algebraicity of holomorphic mappings

To conclude the proof of Theorem 4.3 above, it remains thus to establish the following statement about separate algebraicity of holomorphic mappings, which has been established by Sharipov-Sukhov ([14], *see* also [5] and §10 below) in the case where M is Segre-transversal, instead of being minimal.

Theorem 5.1 Let $g \in \mathscr{H}(\mathscr{V}_{\mathbb{C}^n}(M), \mathbb{C})$ be a holomorphic function, M being a real algebraic CR-generic manifold which is minimal at a Zariski-generic point. Then g is algebraic if and only if its restriction to each Segre variety of M is algebraic.

After complexifying M in a neighborhood of a minimal point, we shall be naturally led to deduce Theorem 5.1 from a more general statement. By slight abuse of terminology, we will call a Frobenius-integrable k-dimensional distribution L over a complex manifold a "*k-vector field*". Such a distribution is said to have "*complex algebraic k-flow*" if the local foliation that it induces (by Frobenius' theorem) coincides with a trivial product foliation by the k-dimensional polydiscs $\bigcup_\theta \Delta^k \times \{\theta\}$ *in some local complex algebraic coordinate system*. Its leaves will be called "*k-curves*". We refer the reader to §7.1 for further material about $\mathbb{L}$-orbits.

Theorem 5.2 Let $\mathbb{L} = \{L^\alpha\}_{\alpha \in A}$ be a system of k_α-vector fields with complex algebraic flow on a small open connected set $U \subset \mathbb{C}^n$. Then

- "**(1)**" For $p \in U$, the $\mathbb{L}$-orbits $\mathscr{O}_{\mathbb{L}}(U, p)$ are complex algebraic manifolds.
- "**(2)**" A holomorphic function $g \in \mathscr{H}(U, \mathbb{C})$ is algebraic on each $\mathbb{L}$-orbit if and only if it is algebraic on each (complex algebraic) integral k_α-curve of every element of $\mathbb{L}$.

In particular, if $\mathscr{O}_{\mathbb{L}}(U, p)$ contains an open subset of $\mathbb{C}^n$ for some $p \in U$, then a function $g \in \mathscr{H}(U, \mathbb{C})$ is algebraic on U under the sole assumption that it is algebraic on $\mathbb{L}$-integral curves. This theorem, as well as its preliminary version given by Sharipov-Sukhov, generalizes the well known separate algebraicity principle in $\mathbb{C}^n$ proved in the book of Bochner-Martin [4]: *A holomorphic function $g \in \mathscr{H}(\Delta^n, \mathbb{C})$ is algebraic if and only if its restriction to every coordinate discs is algebraic*. As a corollary to this Theorem 5.2, we shall also provide a new proof of the following theorem (*cf.* [2]).

Theorem 5.3 The CR orbits of a real algebraic CR manifold are algebraic.

We begin by explaining how Theorem 5.2 applies to provide a proof of Theorem 5.1. For this, we follow and summarize the constructions of [9].

§6. Foliations by complexified Segre varieties and algebraicity of CR-orbits of an algebraic CR manifold

6.1. The extrinsic complexification of M. Let $M \subset \mathbb{C}^n$ be a real algebraic CR-generic submanifold and set $m := \dim_{CR} M$, $d := \operatorname{codim}_{\mathbb{R}} M$, $m + d = n$. Using the theory of algebraic functions, one can see that there exist holomorphic coordinates $t =: (w, z) \in \mathbb{C}^m \times \mathbb{C}^d$ and a *holomorphic algebraic* d-vectorial function $Q(\bar{w}, t) = (Q_l(\bar{w}, t))_{1 \le l \le d}$ such that M is given by the two equivalent systems of cartesian defining functions $z = \bar{Q}(w, \bar{t})$ or $\bar{z} = Q(\bar{w}, t)$. As M is real, these two systems of equations are equivalent and there exists an invertible $d \times d$ matrix power series $a(t, \bar{t})$

such that $z - \bar{Q}(w, \bar{t}) \equiv a(t, \bar{t})\,(\bar{z} - Q(\bar{w}, t)$. We can furthermore assume that $T_0 M = \mathbb{C}^m_w \times \mathbb{R}^d_x$, in which case we shall write the equations of M as follows: $z = \bar{z} + i\bar{\Theta}(w, \bar{w}, \bar{z})$ or $\bar{z} = z - i\Theta(\bar{w}, w, z)$, where Θ vanishes to second order at the origin. In substance, such functions are locally holomorphic functions whose graph is contained in a complex algebraic set of the same dimension as the basis. Let now $\tau := (\bar{t})^c =: (\zeta, \xi) \in \mathbb{C}^m \times \mathbb{C}^d$ denote the complexification variable of $\bar{t}$. Then the extrinsic complexification of M is given by the two, again equivalent, systems of cartesian defining equations $z = \bar{Q}(w, \tau)$ or $\xi = Q(\zeta, t)$. Following [9], we recall that there exist two systems of m-vector fields $\mathscr{L} = (\mathscr{L}^1, \dots, \mathscr{L}^m)$ and $\underline{\mathscr{L}} = (\underline{\mathscr{L}}^1, \dots, \underline{\mathscr{L}}^m)$, which are by definition the *complexifications* of two conjugate systems of m-vector fields spanning $T^{1,0}M$ and $T^{0,1}M$. These two systems $\mathscr{L}$ and $\underline{\mathscr{L}}$ span two integrable subbundles of $T\mathscr{M}$ and they induce therefore two flow (Frobenius) foliations $\mathscr{F}_{\mathscr{L}}$ and $\mathscr{F}_{\underline{\mathscr{L}}}$ of $\mathscr{M}$, thanks to the integrability condition $[\mathscr{L}^i, \mathscr{L}^j] \subset \mathscr{L}$ and $[\underline{\mathscr{L}}^i, \underline{\mathscr{L}}^j] \subset \underline{\mathscr{L}}$. As in [9], this fact can be rendered visible and straightforward just by writing in coordinates these two m-vector fields, using a vectorial and symbolic notation:

$$\mathscr{M} \quad \mathscr{L} = \frac{\partial}{\partial w} + \bar{Q}_w(w, \zeta, \xi)\,\frac{\partial}{\partial z} \quad \text{and} \quad \underline{\mathscr{L}} = \frac{\partial}{\partial \zeta} + Q_\zeta(\zeta, w, z)\frac{\partial}{\partial \xi}. \tag{6.2}$$

Secondly, it is easy to observe that the two *different* (exercise) Segre varieties and conjugate Segre varieties as defined in [9], which can be rewritten as

$$\begin{cases} S_{\bar{t}_p} := \{(w, z)\; z = \bar{z}_p + i\bar{\Theta}(w, \bar{w}_p, \bar{z}_p)\} & \text{and} \\ \overline{S}_{t_p} := \{(\bar{w}, \bar{z})\; \bar{z} = z_p - i\Theta(\bar{w}, w_p, z_p)\} \end{cases} \tag{6.3}$$

admit two different complexifications in $\mathscr{M}$, which we will denote by $\mathscr{S}_{\tau_p}$ and $\mathscr{S}_{t_p}$, and which can be written as follows:

$$\begin{cases} \mathscr{S}_{\tau_p} = \mathscr{S}_{\zeta_p, \xi_p} \quad \zeta = \zeta_p,\ \xi = \xi_p,\ z = \xi_p + i\bar{\Theta}(w, \zeta_p, \xi_p) & \text{and} \\ \underline{\mathscr{S}}_{t_p} = \underline{\mathscr{S}}_{w_p, z_p} \quad w = w_p,\ z = z_p,\ \xi = z_p - i\Theta(\zeta, w_p, z_p). \end{cases} \tag{6.4}$$

Here, the coordinates t_p, $\bar{t}_p$ or τ_p are thought to be *fixed* and the equations (6.3) define two m-dimensional complex submanifolds of $\mathscr{M}$ which coincide in fact with the coordinate intersections $\mathscr{M} \cap \{\tau = \tau_p\}$ and $\mathscr{M} \cap \{t = t_p\}$ respectively. Applying $\mathscr{L}$ to the equation of $\mathscr{S}_{\tau_p}$ and $\underline{\mathscr{L}}$ to the equations of $\underline{\mathscr{S}}_{t_p}$, we see that $\mathscr{L}$ is tangent to $\mathscr{S}_{\tau_p}$ and that $\underline{\mathscr{L}}$ is tangent to $\underline{\mathscr{S}}_{t_p}$. We can thus summarize these observations:

- "**1.**" The $\mathscr{S}_{\tau_p}$ and the $\underline{\mathscr{S}}_{t_p}$ form *families of integral complex algebraic manifolds for $\mathscr{L}$ and $\underline{\mathscr{L}}$* respectively.
- "**2.**" The $\mathscr{S}_{\tau_p}$ are leaves of the flow foliation $\mathscr{F}_{\mathscr{L}}$ of $\mathscr{M}$ by $\mathscr{L}$ and the $\underline{\mathscr{S}}_{t_p}$ are leaves of the flow foliation $\mathscr{F}_{\underline{\mathscr{L}}}$ of $\mathscr{M}$ by $\underline{\mathscr{L}}$.
- "**3.**" Therefore, the two m-flows of $\mathscr{L}$ and of $\underline{\mathscr{L}}$ are both complex algebraic, because the families $\mathscr{F}_{\mathscr{L}} = \bigcup_{\tau_p \in \mathbb{C}^n, |\tau_p| < \delta} \mathscr{S}_{\tau_p}$ and

$\mathscr{F}_{\underline{\mathscr{L}}} = \bigcup_{t_p \in \mathbb{C}^n, |t_p|<\delta} \underline{\mathscr{L}}_{t_p}$ are clearly tangentially and transversally algebraic.

Finally, we will need the following straightforward lemma about complexifications of Lie algebras including a well known characterization of finite type (orbit-minimality) at a point, valuable in the real analytic and real algebraic categories (*see* also [9]). Let $p^c := (p, \bar{p}) \in \mathscr{M}$ be the complexification of the point p. Then :

Lemma 6.5 The following five properties are equivalent :

- "**(a)**" $\mathrm{Lie}_p\,(T^{1,0}M, T^{0,1}M) = \mathbb{C} \otimes T_pM$.
- "**(b)**" $\mathrm{Lie}_p\,(T^cM) = T_pM$.
- "**(c)**" (M, p) is T^cM-orbit-minimal.
- "**(d)**" $\mathrm{Lie}_{p^c}\,(\mathscr{L}, \underline{\mathscr{L}}) = T_{p^c}\mathscr{M}$.
- "**(e)**" $(\mathscr{M}, p^c)$ is $\mathscr{L}, \underline{\mathscr{L}}\}$-orbit-minimal. □

6.6. Deduction of Theorem 5.1. As announced in §5, Theorem 5.1 can be therefore deduced from the more general statement Theorem 5.2, thanks to the following two facts. Let there be given a holomorphic function $g \in \mathscr{H}(\mathscr{V}_{\mathbb{C}^n}(p_0), \mathbb{C})$ defined in a neighborhood of a minimal point p_0 of M, which we think to be the origin in the above coordinates (w, z) for M. Then :

- "**1.**" This function g induces a function $g^c\ \mathscr{M} \to \mathbb{C}$ defined by $g^c(w, z, \zeta, \xi) := g(w, z)$. Since by assumption g^c is algebraic on every Segre variety $S_{\bar{t}_p}$, then g^c is algebraic on every complexified Segre variety $\mathscr{S}_{\tau_p}$. On the other hand, g^c is also clearly algebraic on every conjugate complexified Segre variety $\underline{\mathscr{S}}_{t_p}$, because it is then *constant* equal to $g(w_p, z_p)$.
- "**2.**" According to Lemma 6.5, $\mathscr{M}$ is orbit-minimal at $(p_0, \bar{p}_0)$ for the system $\mathbb{L} := \{\mathscr{L}, \underline{\mathscr{L}}\}$ composed of (only) two m-vector fields. Because by step **1** above, g^c is algebraic on each m-integral manifold of this system, then Theorem 5.2 clearly yields the algebraicity of g^c over $\mathscr{M}$, whence g is algebraic. □

6.7. Deduction of Theorem 5.3. Theorem 5.3 can also be deduced from Theorem 5.2, because of the following relation between the CR-orbits $\mathscr{O}_{CR}(M, p) = \mathscr{O}_{L,\bar{L}}(M, p)$ of points p in M and the $\{\mathscr{L}, \underline{\mathscr{L}}\}$-orbits $\mathscr{O}_{\mathscr{L},\underline{\mathscr{L}}}(\mathscr{M}, p^c)$ of points $p^c \in \mathscr{M}$, which is established in [9]. Let $\pi_t(t, \tau) \mapsto t$ denote the projection on the first coordinate space, which is defined over the complexification space $\mathbb{C}^n_t \times \mathbb{C}^n_\tau$. Let $\underline{\Lambda} := \{(t, \tau)\ \tau = \bar{t}\}$ denote the antidiagonal.

Proposition 6.8 ([9]) We have the following reciprocal complexication relations :

- "**(1)**" $\mathscr{O}_{CR}(M, p)^c = \mathscr{O}_{\mathscr{L},\underline{\mathscr{L}}}(\mathscr{M}, p^c)$.
- "**(2)**" $\mathscr{O}_{CR}(M, p) = \pi_t(\underline{\Lambda} \cap \mathscr{O}_{\mathscr{L},\underline{\mathscr{L}}}(\mathscr{M}, p^c))$.

Granted this proposition and thanks to the observation that the the m-flows of $\mathscr{L}$ and of $\underline{\mathscr{L}}$ are naturally algebraic, it now follows from Theorem 5.2 **(1)** that the orbits $\mathscr{O}_{\mathscr{L},\underline{\mathscr{L}}}(\mathscr{M},q)$ of various points $q \in \mathscr{M}$ are all algebraic, whence with $q := p^c$, we deduce from **(2)** above that the CR-orbits $\mathscr{O}_{CR}(M,p)$ are all real algebraic. To conclude the proof of Theorem 2.5, it now only remains to establish Theorem 5.2.

§7. Algebraicity of orbits of vector fields having algebraic flow and local holomorphic mappings of nowhere minimal CR-generic manifolds

7.1. Definition of the concatenated flow maps. As in Theorem 5.2, let $\mathbb{L} = \{L^\alpha\}_{\alpha\in A}$ be a finite set of nonzero holomorphic k_α-vector fields defined on an open connected set $U \subset \mathbb{C}^n$. For the moment's discussion, we do not assume algebraicity of their flows. As all our reasonings will be local, we shall assume that $U = \Delta^n$. Of course, after demultiplying any such k_α-vector in some k_α linearly independent 1-vector fields, we can also assume that all the L^α's are (usual) 1-vector fields. Thus, denote these vector fields by $L^\alpha = \sum_{j=1}^n a_{j\alpha}\frac{\partial}{\partial z_j}$, where $a_{j\alpha}(z) \in \mathscr{H}(\Delta^n)$. By a well known theorem, the global flow of each such vector field $L^\alpha \in \mathbb{L}$, say $\phi_\alpha\,(t,p) \mapsto \exp(t\,L^\alpha)(p) \in \Delta^n$, is defined over a certain maximal subdomain Ω_α of $\mathbb{C}\times\Delta^n$ which contain $\Delta^n \times \{0\}$ and this global flow is a holomorphic map over that subdomain. However, following our version of Sussmann's constructions elaborated in [9] in the (paradigmatic) analytic context, we shall proceed as follows in order not to deal with these domains of the global flows ϕ_α's. Let us now denote by $(t,p) \mapsto L^\alpha_t(p)$ these flow maps in the sequel. To define $\mathbb{L}$-orbits, we shall need to consider concatenated flow maps of the form $L^{\alpha_k}_{t_k} \circ \cdots \circ L^{\alpha_1}_{t_1}(p)$. By definition, the $\mathbb{L}$-orbit $\mathscr{O}_{\mathbb{L}}(\Delta^n,p)$ of a point $p \in \Delta^n$ is just the set of all such elements $L^{\alpha_k}_{t_k} \circ \cdots \circ L^{\alpha_1}_{t_1}(p) \in \Delta^n$ where $\alpha_1,\ldots,\alpha_k \in A$ and where $k \in \mathbb{N}_*$ is *a priori* unbounded. Nevertheless, after comparison with the (semi-global) constructions in [17], it appears that, due to the fact that the L^α's are defined over Δ^n, this set of points gives nothing more interesting for $k > 3n$. According to Nagano's theorem (revisited by Sussmann with the above definitions), the main property of $\mathbb{L}$-orbits lies in the fact that they are closed complex analytic submanifolds of Δ^n passing through p and for this, $k \leq 3n$ suffices. Furthermore, there is another phenomenon which is due to the principle of analytic continuation and which is quite well known (*cf.* [17]): the local and the global CR-orbits coincide locally in the real analytic category, which is false in the smooth $\mathscr{C}^\infty$ category. Therefore, to study orbits and to fix the domains of the concatenated flow maps, it suffices to choose some positive number $\delta > 0$ such that for all $p \in \frac{1}{2^n}\Delta^n$, all $k \in \mathbb{N}_*$ with $k \leq 3n$ and all $t_1,\ldots,t_k$ with $|t_j| \leq \delta$, one has $L^{\alpha_k}_{t_k} \circ \cdots \circ L^{\alpha_1}_{t_1}(p) \in \Delta^n$, which is clearly possible by continuity of the flow maps. In summary, there is no restriction to define from the beginning the $\mathbb{L}$-orbits of various points $p \in \frac{1}{2^n}\Delta^n$ as the set of all elements

$L_{t_k}^{\alpha_k} \circ \cdots \circ L_{t_1}^{\alpha_1}(p) \in \Delta^n$ where $\alpha_1, \ldots, \alpha_k \in A$, where $k \leq 3n$ and where $|t_j| \leq \delta$. We shall say that the point p is $\mathbb{L}$-orbit-minimal if its $\mathbb{L}$-orbit (with this definition) contains an open neighborhood of p in Δ^n.

7.2. Algebraicity of the $\mathbb{L}$-orbits. Assuming now that all the flows of the elements of $\mathbb{L}$ are complex algebraic, we can easily check part **(1)** of Theorem 5.2. Indeed, according to the construction given in [9], for an arbitrary fixed point $p \in \frac{1}{2^n}\Delta^n$, there exists a integer $e_p \leq n$ such that

- "**1.**" The holomorphic maps $(t_1, \ldots, t_k) \mapsto L_{t_k}^{\alpha_k} \circ \cdots \circ L_{t_1}^{\alpha_1}(p) \in \Delta^n$ are of generic rank equal to e_p for all $e_p \leq k \leq 3n$.
- "**2.**" There exist $t_1^*, \ldots, t_{e_p}^* \in \mathbb{C}$ arbitrarily close to 0 such that the map

$$() \quad \Gamma_{e_p}(t_1, \ldots, t_{e_p}) \mapsto L_{-t_1^*}^{\alpha_1} \circ \cdots \circ L_{-t_{e_p}^*}^{\alpha_{e_p}} \circ L_{t_{e_p}}^{\alpha_{e_p}} \circ \cdots \circ L_{t_1}^{\alpha_1}(p) \in \Delta^n$$

  is of *constant* rank e_p over a neighborhood $\mathscr{T}^*$ of $(t_1^*, \ldots, t_{e_p}^*)$ in $(\delta\Delta)^{e_p}$.
- "**3.**" The map Γ_{e_p} (clearly) satisfies $\Gamma_{e_p}(t_1^*, \ldots, t_{e_p}^*) = p$.
- "**4.**" The image $\Gamma_{e_p}(\mathscr{T}^*)$ is an e_p-dimensional submanifold of Δ^n through p which coincides with the $\mathbb{L}$-orbit $\mathscr{O}_{\mathbb{L}}(\Delta^n, p)$ of p in a neighborhood of p in Δ^n.

Notice that this statement clearly shows that the $\mathbb{L}$-orbit of p is a *submanifold* and that it provides this orbit with the regularity of the concatenated flow map Γ_{e_p}.

Proof. End of proof of Theorem 5.2 As we supposed that the flows are complex algebraic, the above maps Γ_{e_p} are algebraic and then clearly the orbits are complex algebraic by **4**, *q.e.d.* Of course, similar other regularity properties of orbits in other differentiable categories rely upon the regularity $\mathscr{C}^\infty$, $\mathscr{C}^k$, $\mathscr{C}^{l,\alpha}$ of the flow maps. This proves part **(1)** of Theorem 5.2 and we shall establish part **(2)** in §8 below. □ □

7.4. Flow-bow theorem. Now, as in the differentiable theory, it is easy to deduce from the above four properties **1,2,3,4** a *complex algebraic* flow-box theorem, that will be useful.

Theorem 7.5 Let $p \in U$ and set $e_p = \dim \mathscr{O}_{\mathbb{L}}(\Delta^n, p)$. Then there exist a neighborhood V of p in Δ^n and a biholomorphism $\Phi\ V \to \Delta^{e_p} \times \Delta^{n-e_p}$ with complex algebraic components such that

- "**(1)**" $\Phi^{-1}(\Delta^{e_p} \times \{0\}) = \mathscr{O}_{\mathbb{L}}(\Delta^n, p) \cap V$.
- "**(2)**" $\forall\ \zeta_{(n-e_p)} \in \Delta^{n-e_p}$, $\Phi^{-1}(\Delta^{e_p} \times \{\zeta_{(n-e_p)}\})$ is contained in a single $\mathbb{L}$-orbit.
- "**(3)**" The function $\Delta^n \ni p \mapsto \dim_{\mathbb{C}} \mathscr{O}_{\mathbb{L}}(\Delta^n, p) \in \mathbb{N}$ is upper semi-continuous.

As usual, we can now derive from Theorem 7.5 a complex algebraic Frobenius theorem. As the dimension of orbits is an integer depending upper-semi-continuously on the point p, it assumes its maximal value $:= e$ at a

Zariski-generic point $p \in \Delta^n$. Let $\mathscr{V}_M(p)$ be the intersection of a small polydisc $\mathscr{V}_{\mathbb{C}^n}(p)$ with M.

Corollary 7.6 Let $p \in \Delta^n$ with $\dim_{\mathbb{C}} \mathscr{O}_{\mathbb{L}}(\Delta^n, p) = \max_{q \in \mathscr{V}_{\Delta^n}(p)} \dim_{\mathbb{C}} \mathscr{O}_{\mathbb{L}}(\Delta^n, q) =: e$. Then $\mathscr{V}_{\Delta^n}(p)$ is algebraically foliated by $\mathbb{L}$-integral manifolds of dimension e.

Using the properties summarized in (7.3), it is also easy to show that there exists a proper algebraic subvariety of Δ^n outside of which the dimension of $\mathbb{L}$-orbits is maximal equal to e. Finally, we can derive from the previous considerations a real algebraic CR-foliation theorem, useful to prove Theorem 2.7.

Corollary 7.7 Suppose that $p \in M$ is a point at which the dimension of nearby CR orbits is maximal and locally constant equal to $2m+d-e$. Then a neighborhood $\mathscr{V}_M(p)$ is real algebraically foliated by CR-orbits and there exist e holomorphic algebraic functions $h_1, \dots, h_e$ with $\partial h_1 \wedge \cdots \wedge \partial h_e(p) \neq 0$ such that

- "**(1)**" M is contained in $\{h_1 = \bar{h}_1, \dots, h_e = \bar{h}_e\}$. In other words, M is contained in a transverse intersection of e Levi-flat hypersurfaces in general position.
- "**(2)**" Each manifold $M_c = M \cap \{h_1 = c_1, \dots, h_e = c_e\}$ is a CR-orbit of M.

Proof. As in the proof of Proposition 6.8 **(2)**, we can intersect the foliation provided by Corollary 7.6 with the antidiagonal $\underline{\Lambda}$ to produce the algebraic foliation of M by its CR orbits. Let therefore $h_1, \dots, h_e$ be real algebraic functions over (M, p) with linearly independent differential such that the level-sets $\{h_1 = c_1, \dots, h_e = c_e\}$, $c_j \in \mathbb{R}$, are the plaques of this foliation. Since the h_j's are constant on CR-orbits, they are CR on M. Consequently, they extend as holomorphic algebraic functions in a neighborhood of (M, p) in $\mathbb{C}^n$, by the theorem of Severi-Tomassini. $\square$ $\square$

Granted Corollary 7.7, a nowhere minimal CR-generic M is contained in at least one Levi-flat algebraic hypersurface in a neighborhood of a Zariski-generic point. We are now in position to prove Theorem 2.7.

Theorem 7.8 Let M be a real algebraic CR-generic manifold in $\mathbb{C}^n$, let $p \in M$, assume that (M, p) is contained in the Levi-flat hypersurface $\{z_n = \bar{z}_n\}$ and that M possesses a nontrivial infinitesimal CR-automorphism inducing an algebraic foliation. Then M admits a local one parameter family of nonalgebraic biholomorphic self-maps.

Proof. Let $\mathscr{X}$ be a $(1,0)$-vector field with holomorphic algebraic coefficients in a neighborhood of p and let $\mathscr{K} := \mathrm{Re}(\mathscr{X})$ be the associated infinitesimal CR-automorphism, which is tangent to (M, p). Since by assumption, the foliation induced by $\mathscr{X}$ is complex algebraic, we can assume after perharps multiplying $\mathscr{X}$ by a nonzero algebraic function that its complex flow $(u, z) \mapsto \exp(u\mathscr{X})(z) =: \varphi(u, z)$ is algebraic, *see* Lemma 9.12

below. It is well known that for u real, the flow of $\mathscr{X}$ coincides with the real flow of $\mathscr{K} = \mathrm{Re}\,\mathscr{X}$, hence it stabilizes (M, p). By definition, $\partial_u \varphi(u, z) = \mathscr{X}(\varphi(u, z))$. Since $\mathscr{X} \neq 0$, then obviously $\partial_u \varphi(u, z) \not\equiv 0$. Let now $\varpi(z_n)$ be an arbitrary nonzero holomorphic *nonalgebraic* function with $\varpi(0) = 0$ which is *real, i.e.* $\overline{\varpi}(z_n) \equiv \varpi(z_n)$ and satisfies $\partial_u \varphi(\varpi(z_n), z) \not\equiv 0$. Then the map $z \mapsto \exp(\varpi(z_n)\mathscr{X})(z) = \varphi(\varpi(z_n), z)$ is a holomorphic nonalgebraic biholomorphism, because, if it where algebraic, the two conditions : $\varphi(\varpi(z_n), z)$ is algebraic and $\partial_u \varphi(\varpi(z_n), z) \not\equiv 0$ would clearly imply that ϖ is algebraic. Finally, this map sends M into M, because $\mathrm{Re}\,\mathscr{X}$ is an infinitesimal CR-automorphism of M *and because* ϖ *is real on* M, which is the crucial point. To get a one-parameter family of such maps, just take $\varphi(s\,\varpi(z_n), z)$ with $s \in \mathbb{R}$ small. □ □

§8. Partial algebraicity

8.1. Propagation of algebraicity. Let $\mathbb{L} = \{L^\alpha\}_{\alpha \in A}$ be a set of vector fields defined over Δ^n in $\mathbb{C}^n$ with complex algebraic flow. Without loss of generality, we can assume that $k_\alpha = 1$ for all $\alpha \in A$. Following our scheme of proof for Theorem 2.5, it remains now only to prove Theorem 5.2 **(2)**, namely :

Theorem 8.2 A holomorphic function $g \in \mathscr{H}(\Delta^n, \mathbb{C})$ is algebraic on each $\mathbb{L}$-orbit if and only it is algebraic on each $\mathbb{L}$-integral curve.

Proof. We can assume $\mathbb{L} \neq \{0\}$. Of course, any small open piece of an $\mathbb{L}$-orbit being algebraically locally equivalent to some Δ^e by part **(1)** of Theorem 5.2, part **(2)** is then reduced to the case where U is a single $\mathbb{L}$-orbit, *i.e.* U is $\mathbb{L}$-minimal. □ □

Theorem 8.2' Assume that Δ^n is $\mathbb{L}$-minimal at 0 and let $g \in \mathscr{H}(\Delta^n, \mathbb{C})$. If g is algebraic on each $\mathbb{L}$-integral curve, then g is algebraic over Δ^n.

Remark 1. Remark This theorem is proved by Sharipov-Sukhov in [14] in case there exist $L^1, \ldots, L^n \in \mathbb{L}$ and $p \in U$ such that $\mathrm{rk}_{\mathbb{C}}\,(L^1(p), \ldots, L^n(p)) = n$, an assumption which corresponds essentially to Segre-transversality of M [5] in $\mathbb{C}^n$ in place of the more general assumption of $\{\mathscr{L}, \underline{\mathscr{L}}\}$-orbit minimality in the complexification $\mathscr{M}$.

We denote by U a neighborhood of 0 in Δ^n such that at every point $q \in U$, the local $\mathbb{L}$-orbit of q in U contains an open neighborhood of q. We shall say that U is $\mathbb{L}$-minimal (locally). Hence for each germ $\Lambda \subset U$ of a $\mathbb{C}$-algebraic manifold with dim $\Lambda < n$ and $\Lambda \neq \emptyset$, there exist $p \in \Lambda$ and $L \in \mathbb{L}$ such that $L(p) \notin T_p\Lambda$. Otherwise, Λ would be $\mathbb{L}$-integral, in contradiction with $\mathbb{L}$-minimality of U. Of course, $\{q \in \Lambda\ L(q) \in T_q\Lambda\ \forall\ L \in \mathbb{L}\}$ is a proper closed $\mathbb{C}$-algebraic subset of Λ. More generally, we shall need to consider this non-tangentiality property along some families of such manifolds Λ which foliate subdomains of Δ^n.

8.3. Complex algebraic foliations. A regular holomorphic foliation $\mathscr{F}$ of a subdomain $V \subset \mathbb{C}^n$ is called *algebraic* if its transition maps are $\mathbb{C}$-algebraic. For short, we shall say in the sequel that "$\mathscr{F}$ is an $\mathscr{A}$-foliation". We denote by $\mathscr{A}(X, \mathbb{C})$ the ring of holomorphic algebraic functions on the complex manifold X. Let now $\Lambda_{\mathscr{F}}(p)$ be the leaf of $\mathscr{F}$ through p and let $m := \dim_{\mathbb{C}} \mathscr{F}$. We will consider only local foliations, so that there is no restriction to assume that all neighborhoods $\mathscr{V}_{\mathbb{C}^n}(q)$, V, W, *etc.* in the sequel are *foliation boxes*, which will simplify our considerations. Recall that this means that $\mathscr{F}$ is represented in an open set, say V, by an algebraic (global) coordinate system $\Phi\ V \to \Delta^m \times \Delta^{m-n}$, with respect to which the leaves of $\mathscr{F}$ in Δ^n are represented by the "plaques" $\Delta^m \times \{\zeta_{(n-m)}\}$. Thus, in V, the leaves of $\Lambda_{\mathscr{F}}(q)$ of the $\mathscr{A}$-foliation $\mathscr{F}$ are simply the preimages $\Phi^{-1}(\Delta^m \times \{\zeta_{(n-m)}(q)\})$, if we denote $\Phi(q) = \zeta_{(m)}(q) \times \zeta_{(n-m)}(q)$. Let now $p \in V$, and choose an arbitrary complex algebraic $(n-m)$-dimensional submanifold $H \subset V$ passing through p and satisfying $T_pH \oplus T_p\Lambda_{\mathscr{F}}(p) = T_pV$. Thus $\dim_{\mathbb{C}} H + \dim_{\mathbb{C}} \mathscr{F} = n$. Then there exists a neighborhood $W := \mathscr{V}_{\mathbb{C}^n}(p)$ such that $\cup_{q \in H} \Lambda_{\mathscr{F}}(q) \cap W = \mathscr{F}|_W$. Again, W is a foliation box here and the leaves $\Lambda_{\mathscr{F}}(q)$ are embedded closed $\mathbb{C}$-algebraic submanifolds of W which are the plaques of $\mathscr{F}|_W$. Finally, recall that to any vector field $L \in \mathbb{L}$ with $L \neq 0$ and to any point $p \in U$ with $L(p) \neq 0$, there is associated a neighborhood $V = \mathscr{V}_{\mathbb{C}^n}(p)$ which is algebraically foliated by L-integral curves. Such foliations will be denoted by $\mathscr{F}_L$ in the sequel.

8.4. Description of the proof of Theorem 8.2'. We now introduce an important notation. We shall write $g \in \mathscr{A}_{\mathscr{F}}(V)$ if g restricted to each leaf of $\mathscr{F}|_V$ is algebraic. To establish Theorem 8.2', we will prove the following statement by induction on the integer $m \in \mathbb{N}$:

- "$(*)$" For all m, $1 \leq m \leq n$, there exist $p \in U$ and an m-dimensional foliation $\mathscr{F}$ of $V = \mathscr{V}_{\mathbb{C}^n}(p)$ such that $g \in \mathscr{A}_{\mathscr{F}}(V)$.

Then the desired Theorem 8.2' will be just $(*)$ for $m = n$. We already know $(*)$ for $m = 1$, since $g \in \mathscr{A}_{\mathscr{F}}(\mathscr{F}_L)$ for every nonzero vector field $L \in \mathbb{L}$. Let $m \leq n-1$. We have to assume $(*)$ for m, *i.e.* $(*)_m$ and to deduce $(*)$ for $m+1$, *i.e.* $(*)_{m+1}$. *We can describe now this inductional implication in the large, except some two main lemmas that will be rejected below.* First, by $\mathbb{L}$-minimality of U, we have obviously:

Lemma 8.5 Let $p \in U$, $V = \mathscr{V}_{\mathbb{C}^n}(p)$, and let $\mathscr{F}$ be an $\mathscr{A}$-foliation of V with $\dim_{\mathbb{C}} \mathscr{F} = m$, $1 \leq m \leq n-1$. Then for all $q \in V$, there exist $r \in \Lambda_{\mathscr{F}}(q)$ arbitrarily close to q and $L \in \mathbb{L}$ such that the vector $L(r)$ is not tangent to the leaf $\Lambda_{\mathscr{F}}(q)$.

Indeed, otherwise, the manifold $\Lambda_{\mathscr{F}}(q)$ would be an $\mathbb{L}$-integral manifold in a neighborhood of q of positive codimension, a contradiction with local $\mathbb{L}$-minimality of U at every point. Let now $z = (z_1, \ldots, z_n)$ denote algebraic coordinates on U. Here is our first main lemma, inspired from [14], which will be the first step of our proof of the inductional implication. This

lemma will state that if g is algebraic on the leaves of $\mathscr{F}|_V$, then g and all its derivatives are algebraic on the leaves of $\mathscr{F}|_W$ after restriction to a possibly smaller subdomain $W \subset V$.

Lemma 8.6 If $g \in \mathscr{A}_{\mathscr{F}}(V)$, then there exists a nonempty subdomain $W \subset V$ such that all partial derivatives $\partial_z^\beta g \in \mathscr{A}_{\mathscr{F}}(W)$ too, for all $\beta \in \mathbb{N}^n$.

It is easy to check that this condition is independent of coordinates.

Lemma 8.7 Let $V \subset \mathbb{C}^n$ be a domain, let z be complex algebraic coordinates on V, let $\mathscr{F}$ be an $\mathscr{A}$-foliation on V, let $g \in \mathscr{H}(V, \mathbb{C})$ and let $\Phi\ V \to \Phi(V)$ be an $\mathscr{A}$-biholomorphism, $w = \Phi(z)$. If $\partial_z^\beta g \in \mathscr{A}_{\mathscr{F}}(V)$ $\forall\, \beta \in \mathbb{N}^n$, then $\partial_w^\beta (g \circ \Phi^{-1}) \in \mathscr{A}_{\Phi_* \mathscr{F}}(\Phi(V))$, $\forall\, \beta \in \mathbb{N}^n$.

Proof. Simple application of the chain rule, because there exist universal polynomials P_β with $\partial_w^\beta (g \circ \Phi^{-1}) = P_\beta(\{\partial_w^\gamma \Phi^{-1}\}_{\gamma \leq \beta}, \{(\partial_z^\gamma g) \circ \Phi^{-1}\}_{\gamma \leq \beta})$. □ □

To achieve the second step of the proof, we have to construct a foliation $\mathscr{F}^{1+}$ with $\dim \mathscr{F}^{1+} = m+1$ satisfying $(*)_{m+1}$. Let p, V and $\mathscr{F}$ be as in $(*)_m$ and let $q \in V$ be arbitrary *with V like the W in Lemma 8.6* (shrinking V if necessary). Choose now $r \in \Lambda_{\mathscr{F}}(q)$ as in Lemma 8.5 with $L(r) \notin T_r \Lambda_{\mathscr{F}}(q)$. Changing notation, we will now denote this r by p. Further, let H be a piece of an $\mathscr{A}$-manifold through p with $T_p H \oplus T_p \Lambda_{\mathscr{F}}(p) = T_p V$, so $\dim_{\mathbb{C}} H = n - m$. Then $\mathscr{F}|_V = \cup_{q \in H} \Lambda_{\mathscr{F}}(q) \cap V$ (after shrinking V and still with the convention about small open sets being foliation boxes), where, of course, $\Lambda_{\mathscr{F}}(q) \cap \Lambda_{\mathscr{F}}(q') = \emptyset$ if $q \neq q'$. Now, instead of H, let us choose an arbitrary piece H^{1+} of an $\mathscr{A}$-manifold with $p \in H^{1+}$ and $T_p H^{1+} \oplus \mathbb{C} L(p) \oplus T_p \Lambda_{\mathscr{F}}(p) = T_p V$, so $\dim_{\mathbb{C}} H^{1+} = n - m - 1$. To the triple $(\mathscr{F}, L, H^{1+})$, we can finally associate an $\mathscr{A}$-foliation $\mathscr{F}^{1+} = \mathscr{F}^{1+}(\mathscr{F}, L, H^{1+})$ of $\mathscr{V}_{\mathbb{C}^n}(p)$ with $\dim_{\mathbb{C}} \mathscr{F}^{1+} = m+1$, which is defined as follows and will be the important object to get $(*)_{m+1}$. Simply, this foliation will be constructed by flowing the leaves of $\mathscr{F}$ a bit along the nontangential flow lines of L, thus gaining one unit in dimension. Precisely :

- "**1.**" The leaves $\Lambda_{\mathscr{F}^{1+}}(q) := \{L_s(r)\ |s| < \delta, r \in \Lambda_{\mathscr{F}}(q)\}$, for $q \in H^{1+}$,
- "**2.**" $\mathscr{F}^{1+} = \cup_{q \in H^{1+}} \Lambda_{\mathscr{F}^{1+}}(q)$.

By construction, the foliation $\mathscr{F}^{1+}$ clearly has the following structure :

- "**3.**" $\mathscr{F}_L$ is a subfoliation of $\mathscr{F}^{1+}$ in $\mathscr{V}_{\mathbb{C}^n}(p)$.
- "**4.**" $\mathscr{F}$ is not in general a subfoliation of $\mathscr{F}^{1+}$, but each leaf of $\mathscr{F}^{1+}$ contains at least one leaf of $\mathscr{F}$: $\Lambda_{\mathscr{F}^{1+}}(q) \supset \Lambda_{\mathscr{F}}(q)$ for $q \in H^{1+}$.

Remark 2. Important remark Such a step-by-step construction of several foliations is necessary because, even if there may exist n linearly independent vector fields $L^1, \ldots, L^n$ in $\mathbb{L}$ over U, there might not exist a coordinate system whose coordinate line correspond to the flow lines of the L^j's. More specifically, and for the same reason, even in the above construction of $\mathscr{F}^{1+}$, there does not exist in general a system of coordinates

$(x_1, \ldots, x_m, x_{m+1}, y_1, \ldots, y_{n-m-1})$ such that the x_{m+1}-lines correspond to the integral curves of L and such that, simultaneously, the $(x_1, \ldots, x_m)$-planes correspond to leaves of $\mathscr{F}$. In particular, one cannot in fact reduce our Theorem 8.2' directly to a classical theorem due to Bochner-Martin (1949) [3] which states that given $g \in \mathscr{H}(\Delta^n, \mathbb{C})$ algebraic on z_i-lines, $i = 1, \ldots, n$, then g is algebraic. To argue this general impossibility, let us consider for instance for $n = 2$, some two linearly independent vector fields $L_1 := \partial/\partial x$ and $L_2 := \partial/\partial y + a(x, y)\partial/\partial x$ (general form of such a pair of vector field after a convenient choice of coordinates (x, y)). In this case, it is easy to see that there further exists a biholomorphism of $\mathscr{V}_{\mathbb{C}^2}(0)$ transforming L_1 and L_2 into $\partial/\partial x$ and $\partial/\partial y$. However, this fails if $n = 3$. Indeed, let $L_1 = \partial/\partial x$ and $L_2 = \partial/\partial y + x\,\partial/\partial z$ in $\mathbb{C}^3(x, y, z)$. Then there does not exist $\Phi = (\Phi_1, \Phi_2, \Phi_3)$ a biholomorphism of $\mathscr{V}_{\mathbb{C}^3}(0)$ transforming L_1 in $\partial/\partial x$ and L_2 in $\partial/\partial y$, because such Φ would have to satisfy $\Phi_{3x} = 0$ and $\Phi_{3y} + x\Phi_{3z} = 0$, whence $\Phi_{3z} = 0$, $\Phi_{3y} = 0$, $\Phi_3 = ct.$, a contradiction.

The lemma below is analogous to Lemma 8.7 and is also elementary.

Lemma 8.8 Let $g \in \mathscr{H}(V)$, $\partial_z^\beta g \in \mathscr{A}_{\mathscr{F}}(V)$, $\forall\, \beta \in \mathbb{N}^n$. Let $q \in H^{1+}$, let $\Lambda := \Lambda_{\mathscr{F}}(q)$, let $\Lambda^{1+} = \Lambda_{\mathscr{F}^{1+}}(q)$ $(\supset \Lambda)$. Let z^+ be $\mathscr{A}$-coordinates on Λ^{1+} and put $g^+ = g|_{\Lambda^{1+}}$. Then $\partial_{z^+}^\beta(g^+|_\Lambda)$ is algebraic on Λ, for all $\beta \in \mathbb{N}^{m+1}$. $\square$

Our second main lemma will be as follows. To understand it concretely, the reader may read parallely its formulation in coordinates given in Lemma 8.12 below. With our notations, in an arbitrary fixed leaf $\Lambda_{\mathscr{F}^+}(q)$, this lemma will state that the restriction of g to $\Lambda_{\mathscr{F}^+}(q)$ is algebraic provided it is algebraic on every "vertical 1-dimensional leaf" $\Lambda_{\mathscr{F}_{\mathscr{L}}}(r) \subset \Lambda_{\mathscr{F}^+}(q)$, $r \in \Lambda_{\mathscr{F}}(q)$ and provided all its jets of any order are algebraic, when restricted to the fixed "horizontal" m-dimensional manifold $\Lambda_{\mathscr{F}}(q) \subset \Lambda_{\mathscr{F}^+}(q)$.

Lemma 8.9 Let p, V, $\mathscr{F}$, $\mathscr{F}^{1+}$ and L be as above and let $z_q^+ \in \mathbb{C}^{m+1}$ denote some algebraic local coordinates on $\Lambda_{\mathscr{F}^{1+}}(q)$. Let $g \in \mathscr{H}(V, \mathbb{C})$. Then $g \in \mathscr{A}_{\mathscr{F}^{1+}}(V)$, *i.e.* its restriction $g|_{\Lambda^{1+}_{\mathscr{F}}(q)}$ is algebraic for all $q \in H^{1+}$, provided it satisfies the following two conditions for each q:

- "**1.**" Algebraicity on the flow lines of L: $g \in \mathscr{A}_{\mathscr{F}_L}(V)$.
- "**2.**" Algebraicity of all the differentials of g after restriction to the central one-codimensional leaf $\Lambda_{\mathscr{F}}(q)$: $\partial^\beta_{z_q^+}(g|_{\Lambda^{1+}_{\mathscr{F}}(q)})|_{\Lambda_{\mathscr{F}}(q)} \in \mathscr{A}(\Lambda_{\mathscr{F}}(q), \mathbb{C})$, $\forall\, \beta \in \mathbb{N}^{m+1}$.

Remark 3. Remarks **1.** Notice that the first main assumption of this lemma is already in the hypotheses of Theorem 5.2, and that the second one follows from Lemma 8.6.

2. In coordinates $z_q^+ = (z_q, w_q)$ with $\Lambda_{\mathscr{F}}(q) = \{w_q = 0\}$, it suffices in fact to require above that all the $\partial^k_{w_q} g(z_q, 0)$ are algebraic, since then

$\partial^\beta_{z_q}\partial^k_{w_q} g(z_q,0)$ are algebraic, by the stability of algebraicity under differentiation. In other words, it suffices to require only that the transversal jets are algebraic, since the horizontal jets are then automatically algebraic.

In conclusion, the foliation $\mathscr{F}^{1+}$ is the sought foliation satisfying $(*)_{m+1}$. Theorem 8.2' will then be proved once we have proved Lemmas 8.6 and 8.9. $\square$

8.10. Proofs of Lemmas 8.6 and 8.9. It is now possible to reformulate our two main lemmas. Passing to coordinates, there is given an open set $\mathscr{U} = \mathscr{S} \times \mathscr{T} \subset \mathbb{C}^a \times \mathbb{C}^b$, with, say $\mathscr{S} = \Delta^a$, $\mathscr{T} = \Delta^b$, with $a \in \mathbb{N}_*$, $b \in \mathbb{N}_*$, $0 \in \mathscr{S}$, $0 \in \mathscr{T}$, $(s,t) \in \mathscr{S} \times \mathscr{T}$, and a holomorphic function $g\ (s,t) \mapsto g(s,t)$ defined over $\mathscr{S} \times \mathscr{T}$. Here, we shall choose $a := m$, $b := n - m$ for Lemma 8.6 and $a := m$, $b := 1$ for Lemma 8.9. Let $c := a + b$.

Lemma 8.11 If $[\mathscr{S} \ni s \mapsto g(s,t) \in \mathbb{C}] \in \mathscr{A}(\mathscr{S},\mathbb{C})$, $\forall\, t \in \mathscr{T}$, then there exists a nonempty open subset $\mathscr{T}_1 \subset \mathscr{T}$ such that $[\mathscr{S} \ni s \mapsto \partial^\gamma_{s,t} g(s,t) \in \mathbb{C}] \in \mathscr{A}(\mathscr{S},\mathbb{C})$, $\forall\, t \in \mathscr{T}_1$, $\forall\, \gamma \in \mathbb{N}^c$.

Remark 4. Remark For Lemma 8.6, the sets $\mathscr{S} \times \{t\}$ play the rôle of the leaves of $\mathscr{F}$.

Lemma 8.12 If $[\mathscr{S} \ni s \mapsto \partial^\beta_t g(s,0) \in \mathbb{C}] \in \mathscr{A}(\mathscr{S},\mathbb{C})\ \forall\, \beta \in \mathbb{N}^b$ and if $[\mathscr{T} \ni t \mapsto g(s,t) \in \mathbb{C}] \in \mathscr{A}(\mathscr{T},\mathbb{C})$, $\forall\, s \in \mathscr{S}$, then $g(s,t) \in \mathscr{A}(\mathscr{S} \times \mathscr{T},\mathbb{C})$.

Remark 5. Remark For Lemma 8.9, after fixing $q \in H^{1+}$, the set $\mathscr{S} \times \{0\}$ is $\Lambda_{\mathscr{F}}(q)$, the sets $\{s\} \times \mathscr{T}$ are leaves of $\mathscr{F}_L$ contained in $\Lambda^{1+}_{\mathscr{F}}(q)$ and $\mathscr{S} \times \mathscr{T}$ is $\Lambda^{1+}_{\mathscr{F}}(q)$.

Proof. Proof of Lemma 8.11 By assumption, $\forall\, t \in \mathscr{T}$, $\exists\, N_t \in \mathbb{N}$, $N_t \geq 1$, $\exists\, A_t \in \mathbb{N}$, $A_t \geq 1$, $\exists\, a_{i\alpha,t} \in \mathbb{C}$, $1 \leq i \leq N_t$, $|\alpha| \leq A_t$, $\alpha \in \mathbb{N}^a$ and *irreducible* polynomials

$$\mathbb{C}[X,s] \ni P_t(X,s) := \sum_{i=0}^{N_t} \sum_{|\alpha| \leq A_t} a_{i\alpha,t}\, X^i\, s^\alpha, \tag{8.13}$$

such that $P_t(g(s,t),s) \equiv_s 0$. Here, the notation $\Phi(s,t) \equiv_s 0$ means that the formal power series $\Phi(s,t)$ vanishes identically when considered as a series in s only. Let us transform the $a_{i\alpha,t}$ first to make them depend in a nice way with respect to t.

Lemma 8.14 Then there exists a nonempty open set $\mathscr{T}_1 \subset\subset \mathscr{T}$ and an irreducible polynomial of uniformly bounded degree having coefficients $a_{i\alpha}(t)$ holomorphic over $\mathscr{T}_1$, namely there exists:

(8.15)

$$\mathscr{H}(\mathscr{T}_1)[X,s] \ni P(X,s;t) := \sum_{i=0}^{N} \sum_{|\alpha| \leq A} a_{i\alpha}(t)\, X^i\, s^\alpha, \qquad a_{i\alpha} \in \mathscr{H}(\mathscr{T}_1),$$

such that $P(g(s,t),s;t) \equiv_{s,t} 0$, for all $s \in \mathscr{S}$ and $t \in \mathscr{T}_1$.

Proof. End of proof of Lemma 8.11 Taking Lemma 8.14 for granted, it then suffices to differentiate $P(g(s,t),s;t) \equiv 0$ with respect to t, namely to apply ∂_t^β, $|\beta| = 1$, and to eliminate $g(s,t)$ from the system of algebraic equations :

(8.16)
$$\begin{cases} \displaystyle\sum_{i=0}^{N} \sum_{|\alpha| \leq A} \Big(\partial_t^\beta a_{i\alpha}(t)\, g(s,t) + i\, a_{i\alpha}(t)\, \partial_t^\beta g(s,t) \Big)\, g(s,t)^{i-1}\, s^\alpha = 0, \\ P(g(s,t),s;t) = 0 \end{cases}$$

this giving the algebraicity of $s \mapsto \partial_t^\beta g(s,t)$ for all $|\beta| = 1$. General induction is analogous : simply replace $g(s,t)$ by $\partial_t^\beta g(s,t)$. □ □

□

Proof. Proof of Lemma 8.14 To prove the assertion, consider the countable many sets $\mathscr{E}_{N,A} = \{t \in \mathscr{T};\, N_t = N, A_t = A\}$ whose union $\bigcup_{N \geq 1, A \geq 1} \mathscr{E}_{N,A}$ equals $\mathscr{T}$, by (8.13). Of course, the union of their closures $\bigcup_{N \geq 1, A \geq 1} \overline{\mathscr{E}_{N,A}}$ equals $\mathscr{T}$ as well. Thanks to Baire's category theorem, at least one closure $\overline{\mathscr{E}_{N,A}}$ has nonempty interior. This is the main trick. Thus, there exists a nonempty open polydisc $\mathscr{T}_1 \subset\subset \mathscr{T}$ with center $t_1 \in \mathscr{T}_1$ such that $\mathscr{T}_1 \subset \overline{\mathscr{E}_{N,A}}$. Then we have polynomial relations :

(8.17)
$$P_t(g(s,t),s) = \sum_{i=0}^{N} \sum_{|\alpha| \leq A} a_{i\alpha,t}\, g(s,t)^i\, s^\alpha \equiv_s 0, \qquad \text{for } t \in \mathscr{T}_1 \cap \mathscr{E}_{N,A},$$

with a uniform bound for the degrees on a dense subset of $\mathscr{T}_1$. This means that the finite set of functions

$$\mathscr{C}_t = \{\mathscr{S} \ni s \mapsto g(s,t)^i\, s^\alpha \in \mathbb{C}\}_{0 \leq i \leq N, |\alpha| \leq A} \tag{8.18}$$

is always linearly dependent for $t \in \mathscr{T}_1 \cap \mathscr{E}_{N,A}$, and in particular for $t = t_1$. Let us normalize one $a_{i_* \alpha_*, t_1} = 1$, for some i_*, α_* and let us denote, after renumbering its elements, the set $\mathscr{C}_t$ by $\mathscr{C}_t := \{\mathscr{S} \ni s \mapsto h_k(s,t) \in \mathbb{C}\}_{1 \leq k \leq B}$, with $B \in \mathbb{N}_*$ and $h_B(s,t) =: g^{i_*}(s,t)\, s^{\alpha_*}$. Further, let us develope each h_k in power series with respect to s :

$$h_k(s,t) = \sum_{l \in \mathbb{N}^a} h_{kl}(t)\, s^l, \qquad h_{kl} \in \mathscr{H}(\mathscr{T}_1). \tag{8.19}$$

Lemma 8.20 Now, the following properties hold :

- "**(1)**" The functions $h_1(s,t_1), \ldots, h_{B-1}(s,t_1)$ are linearly independent over $\mathbb{C}$.
- "**(2)**" There exist $(B-1)$ pairwise distinct multi-indices $l_{*1}, \ldots, l_{*B-1} \in \mathbb{N}^a$ such that the determinant $\det\big((h_{kl_{*j}}(t_1))_{1 \leq k,j \leq B-1}\big)$ is nonzero.

- "**(3)**" Consequently, the functions of s, $h_1(s,t),\dots,h_{B-1}(s,t)$ are linearly independent over $\mathbb{C}$ for all t running in a neighborhood of t_1.

Proof. Suppose by contradiction that there exist $d_1,\dots,d_{B-1}\in\mathbb{C}$ not all zero such that $d_1h_1(s,t_1)+\cdots+d_{B-1}h_{B-1}(s,t_1)\equiv_s 0$. Reexpressing the h_k's in terms of g and s, this means that there exists a nonzero polynomial $Q(X,s)$ such that $Q(g(s,t_1),s)\equiv_s 0$. As $P_{t_1}(X,s)$ was assumed to be irreducible, it follows that there exists a nonzero polynomial $u(X,s)$ such that $Q(X,s)\equiv u(X,s)P_{t_1}(X,s)$. But the monomials of Q are exactly the same as those of P_{t_1}, except one missing term $X^{i_*}\,s^{\alpha_*}$. For reasons of degree, u is then a nonzero constant. This contradicts the fact that P_{t_1} incorporates the monomial $X^{i_*}\,s^{\alpha_*}$, since $a_{i_*,\alpha_*,t_1}=1$ by our previous choice. Thus, **(1)** is proved. Then the $(B-1)\times\infty$-matrix of complex coefficients $(h_{kl}(t_1))_{1\le k\le B-1,\,l\in\mathbb{N}^a}$ possesses a nonzero $(B-1)\times(B-1)$ minor, which yields **(2)** and then **(3)** evidently. □ □

Proof. End of proof of Lemma 8.14 Shrinking $\mathscr{T}_1$ if necessary, we can therefore assume that the functions $h_1(s,t),\dots,h_{B-1}(s,t)$ are linearly independent for all $t\in\mathscr{T}_1$. Remembering that $h_1(s,t),\dots,h_B(s,t)$ are, on the contrary, linearly *dependent* for all $t\in\mathscr{T}_1\cap\mathscr{E}_{N,A}$, we obtain that there exist $a_{1,t},\dots,a_{B-1,t}\in\mathbb{C}$ such that

$$a_{1,t}\,h_1(s,t)+\cdots+a_{B-1,t}\,h_{B-1}(s,t)\equiv_s h_B(s,t),\quad\forall\,t\in\mathscr{T}_1\cap\mathscr{E}_{N,A},\tag{8.21}$$

or equivalently, using the developement (8.19),
(8.21)
$$a_{1,t}\,h_{1\,l}(t)+\cdots+a_{B-1,t}\,h_{B-1\,l}(t)=h_{B\,l}(t),\quad\forall\,t\in\mathscr{T}_1\cap\mathscr{E}_{N,A},\ \forall\,l\in\mathbb{N}^a.$$

Writing in particular these equations for $l=l_{1*},\dots,l_{B-1\,*}$, using property **(2)** of Lemma 8.20 and Cramer's rule, we deduce that the coefficients $a_{1,t},\dots,a_{B-1,t}$ can be uniquely expressed as rational functions with respect to the $h_{k,l_{*j}}(t)$, $k=1,\dots,B$, $j=1,\dots,B-1$, with the denominator $\det\left((h_{kl_{*j}}(t))_{1\le k,j\le B-1}\right)$, nonvanishing over $\mathscr{T}_1$. We thus have got holomorphic functions $a_1(t),\dots,a_{B-1}(t)$ over $\mathscr{T}_1$ which are rational in the coefficients $h_{k,l_{*j}}(t)$ and which satisfy

$$a_1(t)\,h_1(s,t)+\cdots+a_{B-1}(t)\,h_{B-1}(s,t)\equiv_s h_B(s,t),\tag{8.23}$$

for all $t\in\mathscr{T}_1\cap\mathscr{E}_{N,A}$ and then for all $t\in\mathscr{T}_1$, by continuity. Reexpressing the h_k's in terms of g and s, we finally get (8.15). □ □

□

Proof. Proof of Lemma 8.12 Direct differentiations with respect to t yield the following more explicit version of (8.19), where the rôles of s and t are exchanged :

Lemma 8.24 There exist integers $c_{k,\beta,\gamma}$ and universal polynomials $\phi_{k,\beta,\gamma}$ such that each monomial $g(s,t)^k\,t^\beta$ can be expressed as

$$g(s,t)^k\,t^\beta = \sum_{\gamma\in\mathbb{N}^b} \phi_{k,\beta,\gamma}(\{\partial_t^\beta g(s,0)\}_{|\beta|\leq c_{k,\beta,\gamma}})\,t^\gamma. \tag{8.25}$$

Proof. Applying the differentiations $\partial_t^\gamma|_{t=0}$ to $g(s,t)^k\,t^\beta$, we simply get

$$\phi_{k,\beta,\gamma}(\{\partial_t^\beta g(s,0)\}_{|\beta|\leq c_{k,\beta,\gamma}}) := \partial_t^\gamma|_{t=0}(g(s,t)^k\,t^\beta)/\gamma!. \quad \square \tag{()}$$

$\square$

This expression is very appropriate, because the partial derivatives $\partial_t^\beta g(s,0)$ appear in an algebraic way. On the other hand, the maps $t\mapsto g(s,t)$ are algebraic by assumption. Inversing the rôles of s and t, Lemma 8.14 then yields an open subset $\mathscr{S}_1 \subset\subset \mathscr{S}$ and an irreducible polynomial $R(Y,t;s) = \sum_{k=0}^N \sum_{\beta\in\mathbb{N}^b,|\beta|\leq B} b_{k\beta}(s)\,Y^k\,t^\beta$ such that $R(g(s,t),t;s)\equiv_{t,s} 0$. Here, the functions $b_{k\beta}(s)$, which are holomorphic over $\mathscr{S}_1$, are in fact *rational* with respect to a finite number of the coefficients $\phi_{l,\beta,\gamma}(\{\partial_t^\beta g(s,0)\}_{|\beta|\leq c_{l,\beta,\gamma}})$ appearing in (8.25), as we have observed just after (8.22) in our application of Cramer's rule. In summary, there exist an integer $e\in\mathbb{N}_*$ and a polynomial relation

$$R(g(s,t),t) = \sum_{\beta\in\mathbb{N}^b,|\beta|\leq B}\ \sum_{k=0}^N \psi_{k\beta}(\{\partial_t^\beta g(s,0)\}_{|\beta|\leq e})\ g(s,t)^k\,t^\beta \equiv_{s,t} 0, \tag{8.27}$$

with the $\psi_{k\beta}$ being rational. As by assumption, the partial derivatives $\partial_t^\beta g(s,0)$ are all algebraic, using elimination theory, we can transform (8.27) into a polynomial relation $S(g(s,t),s,t) = 0$, where $S(Z,s,t)\in\mathbb{C}[Z,s,t]$, which shows that $g(s,t)$ is algebraic. The proofs of Lemmas 8.14 and 8.12 are complete. $\square$ $\square$

In conclusion, Theorem 5.2 and Theorem 2.5 are now fully established. It remains now to explain what is the degree of algebraic degeneracy. $\square$

§9. Algebraic degeneracy

9.1. Real algebraic sets. We denote by $\mathbb{C}[z,\bar z]_\mathbb{R}\subset\mathbb{C}[z,\bar z]$ the ideal of *real* polynomials $P(z,\bar z)$, namely those satisfying $P(z,\bar z)\equiv\bar P(\bar z,z)$. Then $\mathbb{C}[z,\bar z]_\mathbb{R}$ is isomorphic to $\mathbb{R}[\mathrm{Re}\,z,\mathrm{Im}\,z]$. Let $\Sigma\subset\mathbb{C}^n$ be a real algebraic set, defined as the zero set of a collection of elements of $\mathbb{C}[z,\bar z]_\mathbb{R}$. Let $\mathscr{J}(\Sigma)$ denote the ideal of polynomials vanishing on Σ. This ideal is prime if and only if Σ is irreducible, which we will suppose throughout §9. The field of fraction $K(\Sigma)$ of the entire ring $\mathbb{C}[z,\bar z]_\mathbb{R}/\mathscr{J}(\Sigma)$ is called the *field of rational functions on* Σ. Its transcendence degree over $\mathbb{C}$ is called the *dimension*

of Σ. Let δ be this dimension. If $P_1, \dots, P_\sigma \in \mathbb{C}[z, \bar{z}]_{\mathbb{R}}$ is a system of generators of the prime ideal $\mathscr{J}(\Sigma)$, the generic rank of the complex $\sigma \times 2n$ Jacobian matrix

$$J_P(z, \bar{z}) := \left(\frac{\partial P_i}{\partial z_k}(z, \bar{z}) \ \ \frac{\partial P_i}{\partial \bar{z}_k}(z, \bar{z}) \right)_{1 \le i \le \sigma,\, 1 \le k \le n}, \tag{9.2}$$

is then equal to $d := n - \delta$ over Σ, the *codimension* of Σ. The set Σ_{reg} at which the rank of $J_P(z, \bar{z})$ is equal to d does not depend on the choice of a system of generators for $\mathscr{J}(\Sigma)$ and is called the *set of regular points of* Σ, in the algebraic sense. Its complement $\Sigma_{sing} := \Sigma \backslash \Sigma_{reg}$ is a proper real algebraic subvariety of Σ called its *set of singular points*.

Example 1. Example 9.3 The celebrated *Whitney umbrella* is the cubic of $\mathbb{R}^3$ defined by $W := \{(x_1, x_2, x_3) \in \mathbb{R}^3 \ x_3 x_1^2 = x_2^2\}$. In the algebraic sense, $W_{sing} = 0 \times 0 \times \mathbb{R}$ and the set $W_{reg} = W \cap \{(x_1, x_2) \neq (0, 0)\} \subset \{x_1 \neq 0\}$ is not connected and not dense in W for the euclidean topology. This example also shows that the set of geometrically singular points of W, equal to $\{(0, 0, x_3) \ x_3 \geq 0\}$ is only semi-algebraic. Let us consider the tube $\Sigma := W \times (i\mathbb{R})^3$ over W in $\mathbb{C}^3$, namely $\Sigma := \{(z_1, z_2, z_3) \in \mathbb{C}^3 \ x_3 x_1^2 = x_2^2\}$, $x_j = \mathrm{Re}\, z_j$. The set $\Sigma_{sing} = \{x_1 = x_2 = 0\} = \mathbb{R} \times \mathbb{R} \times \mathbb{C}$ is then 1-algebraically degenerate and nowhere minimal. The set $\Sigma_{reg} = \Sigma \cap \{x_1 \neq 0\}$ is a rigid real algebraic hypersurface globally defined as the graph $x_3 = x_2^2 / x_1^2$ on $\mathbb{C}^3 \backslash \{x_1 = 0\}$ which carries the two CR vector fields $\bar{L}_1 := x_1 \partial / \partial \bar{z}_1 - 2x_3 \partial / \partial \bar{z}_3$ and $\bar{L}_2 := x_1^2 \partial / \partial \bar{z}_2 + 2x_2 \partial / \partial \bar{z}_3$. Since the Lie bracket $[L_2, \bar{L}_2] = x_1^2 \partial / \partial \bar{z}_3 - x_1^2 \partial / \partial z_3$ is linearly independent with $(\bar{L}_1, \bar{L}_2)$ at every point, the hypersurface Σ_{reg} is minimal at every point. Further, if $\mathscr{T} := \sum_{j=1}^3 a_j(z) \partial / \partial z_j$ is a local holomorphic algebraic vector field tangent to Σ_{reg}, we have $a_1(z) x_1 x_3 - a_2(z) x_2 + a_3(z) x_1^2 / 2 = 0$, whence $a_1 = a_2 = a_3 = 0$, namely Σ_{reg} is algebraically nondegenerate (it is even Levi-nondegenerate at every point). This contrasts with Σ_{sing}. Let us finally illustrate Theorems 2.5, 2.6 and 3.1. Let $f \ (\Sigma, p) \to (\Sigma, p)$ be a germ of biholomorphism fixing p. If $p \in \Sigma_{sing} \cap \{x_3 < 0\}$, there exists a local perturbation $\phi \circ f$ of f such that $\nabla^{tr}(\phi \circ f) = 1$. If $p \in \Sigma \cap \{x_3 \geq 0\}$, then f is necessarily algebraic.

9.4. Extrinsic complexification. We define $\Sigma^c := \{(z, \zeta) \in \mathbb{C}^{2n} \, P(z, \zeta) = 0, \ \forall P \in \mathscr{J}(\Sigma)\}$. Then Σ^c is a complex algebraic subset of $\mathbb{C}^{2n}$ with $\Sigma^c \cap \underline{\Lambda} = \Sigma$, where $\underline{\Lambda} = \{\zeta = \bar{z}\}$, if we identify $\{(z, \bar{z}) \ z \in \Sigma\}$ with $\{z \in \Sigma\}$. This set Σ^c is useful because Σ_{reg} need not be connected. Using the rank property of the Jacobian (9.2) and the connectedness of the regular part of complex algebraic sets, one can check that Σ^c is irreducible if Σ is. Further, using the connectedness of the regular part Σ^c_{reg} of Σ^c, one can show that if there exists a point $p \in \Sigma$ such that $r(p, \bar{p}) \neq 0$, where $r(z, \bar{z}) \in \mathbb{C}[z, \bar{z}]_{\mathbb{R}}$, then the set $\{z \in \Sigma \, r(z, \bar{z}) \neq 0\}$ is dense in Σ_{reg} for the euclidean topology. An arbitrary union of sets of the form $\{z \in \Sigma r(z, \bar{z}) \neq 0\}$, where r does not vanish identically on Σ, will be called a Zariski open subset of

Σ. A point $p \in \Sigma$ will be called *Zariski-generic* if it runs in some Zariski open subset of Σ.

9.5. Intrinsic complexification. By noetherianity of $\mathbb{C}[z]$, the intersection of all complex algebraic subvarieties containing Σ is a complex algebraic subvariety, called the *intrinsic complexification* of Σ and denoted by Σ^{i_c}. Again, passing to extrinsic complexification, from the relation $(\Sigma^{i_c})^c = \Sigma^{i_c} \times \mathbb{C}^n_\zeta$ and using the principle of analytic continuation for complex algebraic subsets, it follows that Σ^{i_c} is irreducible.

9.6. Locus of CR points. We denote by Σ_{CR} the set of points $z \in \Sigma_{reg}$ at which the rank of the $\sigma \times n$ complex matrix $(\frac{\partial P_i}{\partial z_k}(z, \bar{z}))_{1 \leq i \leq \sigma,\, 1 \leq k \leq n}$ is maximal, hence locally constant. It is called the set of *CR points* of Σ. Of course, its extrinsic complexification $(\Sigma_{CR})^c$, the set of points $(z, \zeta) \in \Sigma^c_{reg}$ at which the complex matrix $(\frac{\partial P_i}{\partial z_k}(z, \zeta))_{1 \leq k \leq n,\, 1 \leq i \leq \sigma}$ is maximal and locally constant, is also connected. Let d_1 be this generic point. We have $0 \leq d_1 \leq d$. Notice that Σ is CR-generic at a Zariski-generic rank if and only if $d_1 = d$. Let the CR-codimension $\operatorname{codim}_{CR} \Sigma$ be $d - d_1$. It is well known that in a neighborhood of a point $p \in \Sigma_{CR}$, then Σ is contained in a holomorphic algebraic submanifold of codimension $(d - d_1)$, which is the *local intrinsic complexification* $\Sigma^{i_c}_{loc}$ of Σ. Clearly, $\Sigma^{i_c}_{loc}$ is contained in a unique irreducible complex algebraic subset of $\mathbb{C}^n$. Passing to extrinsic complexification to use the connectedness of Σ^c, one can check that this irreducible complex algebraic subset does not depend on $p \in \Sigma_{CR}$ and is nothing else than the (global) intrinsic complexification Σ^{i_c} defined in §9.5 above.

9.7. Nonlocality of algebraic degeneracy. At an arbitrary point $p \in \Sigma_{CR}$, we define the integer $\kappa_{\Sigma,p}$ to be the maximal number of $(1,0)$ vector fields $L_1, \ldots, L_j$ with algebraic coefficients in a neighborhood of p which induce a complex algebraic foliation of $\mathscr{V}_{\mathbb{C}^n}(p)$ (possibly with singularities; of course, algebraic foliation implies algebraicity of the coefficients) such that

- "**(1)**" $L_1, \ldots, L_j$ are tangent to $\Sigma_{CR} \cap \mathscr{V}_{\mathbb{C}^n}(p)$.
- "**(2)**" $L_1, \ldots, L_j$ are linearly independent: if $b_1, \ldots, b_j$ are algebraic holomorphic in $\mathscr{V}_{\mathbb{C}^n}(p)$ and if $b_1 L_1 + \ldots + b_j L_j = 0$, then $b_1 = \ldots = b_j = 0$.

Then the vectors $L_1(q), \ldots, L_{\kappa_{\Sigma,p}}(q)$ are $\mathbb{C}$-linearly independent for q varying in a Zariski open subset of $\Sigma_{CR} \cap \mathscr{V}_{\mathbb{C}^n}(p)$. Evidently, the function $\Sigma_{CR} \ni p \mapsto \kappa_{\Sigma,p} \in \mathbb{N}$ is lower semi-continuous.

Lemma 9.8 Let $p, q \in \Sigma_{CR}$. Then $\kappa_{\Sigma,p} = \kappa_{\Sigma,q}$.

Proof. Let $L_1, \ldots, L_{\kappa_{\Sigma,p}}$ satisfy **(1)** and **(2)** above in $\mathscr{V}_{\mathbb{C}^n}(p)$. The coefficients of $L_j := \sum_{k=1}^n a_{j,k}(z) \frac{\partial}{\partial z_k}$ being holomorphic algebraic in a neighborhood of p, $j = 1, \ldots, \kappa_{\Sigma,p}$, there exists a complex algebraic subvariety E of $\mathbb{C}^n$ with $p \notin E$, such that

- "**(3)**" The coefficients $a_{j,k}(z)$ extend holomorphically along any continuous path γ with origin p which is contained in $\mathbb{C}^n\backslash E$ and with endpoint an arbitrary point $q \in \mathbb{C}^n\backslash E$.
- "**(4)**" The extended vector fields at q have holomorphic algebraic coefficients, they induce an algebraic foliation and they are linearly independent at q in the sense of **(2)** above.

Notice that the vector fields $(L_1)^c, \ldots, (L_{\kappa_{\Sigma,p}})^c$ are tangent to $(\Sigma_{CR})^c$ in a neighborhood of p. Let $q \in \Sigma_{CR}$ be arbitrary. Remember that if A, B are complex algebraic sets with A irreducible, $A_{reg}\backslash B$ is connected and nonempty unless B contains A. Hence $(\Sigma_{CR})^c\backslash(E \times \mathbb{C}^n_\zeta)$ is connected. By **(3)**, there exists a continous path γ from $(p, \bar{p})$ to $(q, \bar{q})$ running in $(\Sigma_{CR})^c\backslash(E \times \mathbb{C}^n_\zeta)$. By the principle of analytic continuation, it follows that the extended vector fields along γ, say $L'_1, \ldots, L'_{\kappa_{\Sigma,p}}$ are tangent to $(\Sigma_{CR})^c \cap \mathscr{V}_{\mathbb{C}^{2n}}(q, \bar{q})$. We deduce $\kappa_{\Sigma,p} \leq \kappa_{\Sigma,q}$, and then $\kappa_{\Sigma,p} = \kappa_{\Sigma,q}$, as desired. $\square$ $\square$

9.9. Local straightening property. Let κ_Σ denote the common value of all the $\kappa_{\Sigma,p}$ for $p \in \Sigma_{CR}$ and call it the *degree of algebraic degeneracy* of Σ. The following statement achieves to explain Theorem 2.5.

Theorem 9.10 There exists a proper real algebraic subvariety F of Σ with $\Sigma\backslash F \subset \Sigma_{CR}$ such that in a neighborhood of every point $p \in \Sigma\backslash F$, there exist local holomorphic algebraic coordinates in which Σ is of the form $\Delta^{\kappa_\Sigma} \times \underline{\Sigma}_p$, where $\underline{\Sigma}_p \subset \mathbb{C}^{n-\kappa_\Sigma}$ is a piece of smooth CR real algebraic subset satisfying $\kappa_{\underline{\Sigma}_p} = 0$.

Proof. We check first $\kappa_{\underline{\Sigma}_p} = 0$. Otherwise, let $\underline{L}$ be a $(1,0)$ vector field in $\mathbb{C}^{n-\kappa_\Sigma}$ inducing an algebraic foliation tangent to $0 \times \underline{\Sigma}_p$. Of course, $\underline{L}$ is linearly independent with $L_1 = \partial/\partial z_1, \ldots, L_{\kappa_\Sigma} = \partial/\partial z_{\kappa_\Sigma}$. This contradicts $\kappa_{\Sigma,p} = \kappa_\Sigma$.

Let us now establish the product property. According to the preceding considerations, there exist multivalued global vector fields $L_1, \ldots, L_{\kappa_\Sigma}$ defined outside a complex algebraic subset E of $\mathbb{C}^n$. Enlarging E if necessary, we can assume that the vectors $L_1(q), \ldots, L_{\kappa_\Sigma}(q)$ are linearly independent at every point $q \in \mathbb{C}^n\backslash E$. Let $\Sigma_{NCR} \supset \Sigma_{sing}$ be the set of non-CR points of Σ. Clearly, Σ_{NCR} is a proper real algebraic subvariety of Σ. We set $F := \Sigma_{NCR} \cup (E \cap \Sigma)$. According to §9.6 above, Σ_{CR} is CR-generic in its local intrinsic complexification $(\Sigma_{CR} \cap \mathscr{V}_{\mathbb{C}^n}(p))^{i_c} = \Sigma^{i_c} \cap \mathscr{V}_{\mathbb{C}^n}(p)$, which is a smooth complex algebraic subvariety of codimension equal to $\mathrm{codim}_{CR}\Sigma^{i_c}$. The vector fields $L_1, \ldots, L_{\kappa_\Sigma}$ being tangent to Σ_{CR}, their restriction to $\Sigma^{i_c} \cap \mathscr{V}_{\mathbb{C}^n}(p)$ is tangent to it. To prove Theorem 9.10, we can therefore reason directly inside $\Sigma^{i_c} \cap \mathscr{V}_{\mathbb{C}^n}(p)$. In other words, we come to the following statement. $\square$

Lemma 9.11 Let $M \subset \mathbb{C}^n$ be a CR-generic real algebraic submanifold, let $p \in M$ and let $L_1, \dots, L_\kappa$, $\kappa \geq 1$, be $(1,0)$ vector fields with algebraic coefficients such that

- "**(1)**" The vectors $L_1(q), \dots, L_\kappa(q)$ are linearly independent.
- "**(2)**" The induced foliations $\mathscr{F}_{L_1}, \dots, \mathscr{F}_{L_\kappa}$ are algebraic in $\mathscr{V}_{\mathbb{C}^n}(p)$.
- "**(3)**" The vector fields $L_1, \dots, L_\kappa$ are tangent to $M \cap \mathscr{V}_{\mathbb{C}^n}(p)$.

Then there exist local algebraic coordinates at p in which $M = \Delta^\kappa \times \underline{M}$, where $\underline{M} \subset \mathbb{C}^{n-\kappa}$ is a CR-generic real algebraic submanifold.

Proof. According to §6.1, there exist local coordinates $t = (w, z) \in \mathbb{C}^m \times \mathbb{C}^d$ in which $p = 0$ and M $z_l = \bar{Q}_l(w, \bar{t})$, $l = 1, \dots, d$. We shall identify $(t_1, \dots, t_m) = (w_1, \dots, w_m)$. Of course $\kappa \leq m$. Let $L_1 = \sum_{k=1}^n a_k(t)\, \partial/\partial t_k$. We can assume that $a_1(0) \neq 0$. Since a_k/a_1 is still holomorphic algebraic, $k = 2 \dots, n$, we come down to $L_1 = \partial/\partial w_1 + \sum_{k=2}^n a_k(t)\, \partial/\partial t_k$. Due to $a_1(t) \equiv 1$, the following lemma puts in concrete form the assumption of algebraicity of $\mathscr{F}_{L_1}$.

Lemma 9.12 The foliation $\mathscr{F}_{L_1}$ is algebraic if and only if the flow of $\mathscr{F}_{L_1}$ is algebraic.

Proof. For small $u \in \mathbb{C}$ and $t \in \mathbb{C}^n$, let $\varphi_1(u, t) := \exp(u\, L_1)(t)$, be the local flow of L_1 in a neighborhood of 0. If it is algebraic, then the algebraic biholomorphism $\Phi(w_1, t_2, \dots, t_n) := \varphi_1(w_1, 0, t_2, \dots, t_n)$ produces some new straightened algebraic coordinates in which the integral curves of L_1 are the affine lines $\{t_2 = c_2, \dots, t_n = c_n\}$, since $\Phi_*(\partial/\partial w_1) = L_1$. This shows the algebraicity of $\mathscr{F}_{L_1}$.

Conversely, let $\Phi\ \mathbb{C} \times \mathbb{C}^{n-1} \ni (x, y) \mapsto \Phi(x, y) \in \mathbb{C}^n$, $\Phi(0) = 0$, be a local algebraic coordinate system in which the lines $\{y = c\}$ coincide with the complex integral curves of L_1. As $a_1(t) \equiv 1$, for fixed u_*, the flow of L_1 at time u_*, restricted to the algebraic hypersurface $\{w_1 = 0\}$, namely the map $(t_2, \dots, t_n) \mapsto \varphi_1(u_*, 0, t_2, \dots, t_n)$, sends $\{w_1 = 0\}$ onto the algebraic hypersurface $\{w_1 = u_*\}$. Thanks to the coordinates defined by Φ, we deduce that

- "**1.**" The maps $(t_2, \dots, t_n) \mapsto \varphi_1(w_{1*}, 0, t_2, \dots, t_n)$ are algebraic.
- "**2.**" The maps $w_1 \mapsto \varphi_1(w_1, 0, t_{2*}, \dots, t_{n*})$ are algebraic.

According to the separate algebraicity principle [3], the map $(w_1, t_2, \dots, t_n) \mapsto \varphi_1(w_1, 0, t_2, \dots, t_n)$ is then algebraic. Thanks to $a_1(t) \equiv 1$, we have $\varphi_1(w_1, t_1, t_2, \dots t_n) \equiv \varphi_1(w_1 + t_1, 0, t_2, \dots, t_n)$, so the total flow of L_1 is algebraic, as desired. □ □

Proof. End of proof of Lemma 9.11 Since the straightened field $\partial/\partial w_1$ is tangent to M, in coordinates like in §6.1, the functions $\bar{Q}_l$ are independent of $(w_1, \bar{w}_1)$. Thus M is the product $\Delta \times \underline{M}$, where $\underline{M} \subset \mathbb{C}^{n-1}$ is given by $z_l = \bar{Q}_l(w_2, \dots, w_m, \bar{t}_2, \dots, \bar{t}_n)$, $l = 1, \dots, d$. If $\kappa \geq 2$, let $L_2 = \sum_{k=1}^n a_k(t)\, \partial/\partial t_k$ be linearly independent with $\partial/\partial w_1$ at 0. We can assume that $a_2(t) \equiv 1$, namely $L_2 = a_1(t)\, \partial/\partial w_1 + \partial/\partial w_2 + \sum_{k=3}^n a_k(t)\, \partial/\partial t_k$.

Thanks to Lemma 9.12 above, its flow $\varphi_2(u,t) := \exp(uL_2)(t)$ is algebraic. Then $\Phi(t_2,t_3,\dots,t_n) := \exp(t_2L_2)(0,0,t_3,\dots,t_n)$ is algebraic. Denote $\Phi := (\Phi_1,\Phi_2,\dots\,\Phi_n)$ and $\underline{\Phi} := (\Phi_2,\dots,\Phi_n)$. We have $\det(\frac{\partial\underline{\Phi}_j}{\partial t_k}(0))_{2\le j,k\le n} \neq 0$. The map $\underline{\Phi}$ therefore induces a local algebraic biholomorphism of $0\times\mathbb{C}^{n-1}$ fixing 0. Since L_2 is tangent to M, we have $(0,0,t_3,\dots,t_n)\in M$ iff $\Phi(t_2,t_3,\dots,t_n)\in M$. As the equations of M do not depend on $(w_1,\bar{w}_1)$, it follows that $\underline{\Phi}(0,t_3,\dots,t_n)\in\underline{M}$ iff $\underline{\Phi}(t_2,t_3,\dots,t_n)\in\underline{M}$. Consequently the vector field $\underline{L}_2 := \underline{\Phi}_*(\partial/\partial t_2)$ is tangent to $\underline{M}$. Further, the foliation $\mathscr{F}_{\underline{L}_2}$ is algebraic, since $\underline{\Phi}$ is. In the coordinates over $\mathbb{C}^{n-1}$ defined by $\underline{\Phi}$, we have $\underline{L}_2 = \partial/\partial t_2$. As above, we deduce that the equations of $\underline{M}$ are independent of $(w_2,\bar{w}_2)$, whence $M=\Delta^2\times\underline{M}$, with $\underline{M}\subset\mathbb{C}^{n-2}$ being CR-generic. If $\kappa\ge 3$, we proceed analogously, *etc.* up to $\underline{L}_\kappa$, which completes the proofs of Lemma 9.11 and of Theorem 9.10. □ □

□

9.13. Holomorphic degeneracy. Let Σ be an irreducible real algebraic subset of $\mathbb{C}^n$. Let $p\in\Sigma_{CR}$. Let $\kappa^{hol}_{\Sigma,p}$ denote the maximal number of $(1,0)$ vector fields $L_1,\dots,L_j$ with holomorphic coefficients which are tangent to $\Sigma_{CR}\cap\mathscr{V}_{\mathbb{C}^n}(p)$ and linearly independent over $\mathscr{H}(\mathscr{V}_{\mathbb{C}^n}(p))$ (*cf.* [2,15]). Clearly, we have $\kappa^{hol}_{\Sigma,p}\ge\kappa_\Sigma$, since we do not require the induced foliations to be algebraic. Nevertheless, we can deduce from Theorem 2.5 that these two integers coincide.

Corollary 9.14 For all $p\in\Sigma_{CR}$, we have $\kappa^{hol}_{\Sigma,p}=\kappa_{\Sigma,p}=\kappa_\Sigma$.

Proof. Set $\chi := \kappa^{hol}_{\Sigma,p}$. Let us choose $q\in\mathscr{V}_{\mathbb{C}^n}(p)$ with the vectors $L_1(q),\dots,L_\chi(q)$ being linearly independent, in a neighborhood of which $\Sigma=\Delta^{\kappa_\Sigma}\times\underline{\Sigma}_q$. As $\chi>\kappa_\Sigma$, a linear combination of the L_j's is tangent to $0\times\underline{\Sigma}_q$. We are thus reduced to prove the corollary in the case where $\kappa_\Sigma=0$ and $\chi\ge 1$. By contradiction, assume that $\kappa_\Sigma=0$ but there exists a holomorphic vector field L with $L(p)\neq 0$ tangent to $\Sigma\cap\mathscr{V}_{\mathbb{C}^n}(p)$. Let $\varphi(u,t):=\exp(uL)(t)$ be the flow of L, written in coordinates t vanishing at p. Set $u_{a,b}(t):=b+\sum_{k=1}^n a_k\,t_k$, with small $a\in\mathbb{C}^n$ and $b\in\mathbb{C}$. According to the separate algebraicity principle, $\varphi(u,t)$ is algebraic if and only if $t\mapsto\varphi(u_{a,b}(t),t)$ is algebraic for all (a,b). If $\varphi(u,t)$ was algebraic, there would exist an algebraic biholomorphism straightening L in $\partial/\partial t_1$ (*see* the proof of Lemma 9.12), whence $\kappa_\Sigma\ge 1$, which is untrue. Thus there exist a and b such that $t\mapsto\varphi(u_{a,b}(t),t)$ is a nonalgebraic biholomorphic self-map of (Σ,p). Then Corollary 3.3 implies $\kappa_\Sigma\ge 1$, contradiction. □ □

9.15. Link with the defining equations. Finally, we describe a useful mean of calculating κ_Σ (*cf.* [2,15]). Without loss of generality, we can pick a small connected piece M of Σ_{CR} centered at one of its points p at which M is CR-generic and given by holomorphic algebraic equations $\bar{z}_l=Q_l(\bar{w},t)$, $l=1,\dots,d$. Let us write $Q_l(\bar{w},t)=\sum_{\beta\in\mathbb{N}^m}\bar{w}^\beta\,Q_{l,\beta}(t)$. Let $\mathscr{Q}(t)$ denote

the $d \times \infty$ matrix of holomorphic algebraic functions $(Q_{l,\beta}(t))_{1 \leq l \leq d,\, \beta \in \mathbb{N}^m}$. After a dilatation of coordinates, we can assume that all the $Q_{l,\beta}$ are holomorphic in Δ^n. Let us study abstractly the situation where we are given such a denumerable collection $\Phi(t) := (\varphi_k(t))_{k \in \mathbb{N}} \in \mathbb{C}^\infty$ of holomorphic functions over Δ^n. By the Jacobian $\operatorname{Jac} \Phi(t)$ of $\Phi(t)$, we understand the $n \times \infty$ matrix $(\frac{\partial \varphi_k}{\partial t_l}(t))_{1 \leq l \leq n,\, k \in \mathbb{N}}$. Let i be an integer with $1 \leq i \leq n$. We consider the denumerable collection of all $i \times i$ minors of $\operatorname{Jac} \Phi(t)$. Let χ denote the generic rank of the map $\Phi(t)$. In other words, all the $(\chi + 1) \times (\chi + 1)$ minors of $\operatorname{Jac} \Phi(t)$ vanish identically over Δ^n and there exists a $\chi \times \chi$ minor of $\operatorname{Jac} \Phi(t)$ that does not vanish identically. We shall denote by $\text{gen-rk}_{\mathbb{C}}\, \Phi = \chi$ the generic rank of Φ. The set $E \subset \Delta^n$ of points where all the $\chi \times \chi$ minors vanish is then a proper real algebraic subset of Δ^n. According to the constant rank theorem (also valuable for a denumerable collection of holomorphic functions), for each point $p \in \Delta^n \backslash E$, there exists a neighborhood V of p contained in $\Delta^n \backslash E$ such that for each $q \in V$, the set $\mathscr{F}_q := \{t \in V \ \varphi_k(t) = \varphi_k(q) \ \forall k \in \mathbb{N}\}$ is a complex algebraic variety and the union of the $\mathscr{F}_q$ equips V with a holomorphic algebraic foliation of dimension $n - \chi$. Applying this to $\mathscr{Q}(t)$, we deduce the following fundamental result.

Theorem 9.16 Let M be a connected local piece of a real algebraic CR-generic submanifold of $\mathbb{C}^n$ of CR dimension m and of codimension d passing through the origin which is given in coordinates $t = (w, z) \in \mathbb{C}^m \times \mathbb{C}^d$ by the d scalar equations $\bar{z}_l = Q_l(\bar{w}, t) = \sum_{\beta \in \mathbb{N}^m} \bar{w}^\beta\, Q_{l,\beta}(t)$, $l = 1, \ldots, d$, let $\mathscr{Q}(t)$ denote the $d \times \infty$ matrix of holomorphic algebraic functions $(Q_{l,\beta}(t))_{1 \leq l \leq d,\, \beta \in \mathbb{N}^m}$. Let χ_M denote the generic rank of $\mathscr{Q}(t)$. Then the degree of algebraic degeneracy κ_M of M defined in §9.7 above has the following properties :

- "**(1)**" The relations $\kappa_M + \chi_M = n$ and $\kappa_M \leq m$ hold.
- "**(2)**" The set of points $t \in M$ where the rank of $\mathscr{Q}(t)$ is $< \chi_M$ is a proper real algebraic subvariety of M.

Proof. It remains only to check that $\kappa_M = n - \chi_M$. At first, applying Theorem 9.10, we see immediately that $\chi_M \leq n - \kappa_M$. Conversely, at a point p close to the origin at which the matrix $\mathscr{Q}(t)$ is of constant rank, a neighborhood V of p algebraically foliates by $(n - \chi_M)$-dimensional leaves defined by $\mathscr{F}_q = \{t \in V \ Q_{l,\beta}(t) = Q_{l,\beta}(q), \ \forall\, l, \beta\}$. Of course, such a foliation is algebraically biholomorphic to a product by a polydisc $\Delta^{n - \chi_M}$. It remains only to show that the foliation is *tangent* to M, namely that one of its leaf is entirely contained in M if and only if it intersects M. But suppose $q \in M$, *i.e.* $z_q = \bar{Q}(w_q, \bar{t}_q)$, and let $t \in \mathscr{F}_q$ which by definition satisfies $\bar{Q}_{l,\beta}(\bar{t}) = \bar{Q}_{l,\beta}(\bar{q})$ for all l, β. We deduce $z_q = \bar{Q}(w_q, \bar{t})$. Remember that there exists an invertible $d \times d$ matrix $a(t, \tau)$ satisfying $z - \bar{Q}(w, \tau) \equiv a(t, \tau)\, (\xi - Q(\zeta, t))$. We deduce $\bar{z} = Q(\bar{w}, t_q)$. Finally, $\bar{z} = Q(\bar{w}, t)$,

again since $Q_{l,\beta}(t) = Q_{l,\beta}(q)$ for all l, β. Hence $t \in M$. This shows that $\kappa_M \geq n - \chi_M$, as desired. $\square$ $\square$

§10. SEGRE-TRANSVERSALITY

10.1. Definitions. Our goal in this paragraph is to establish that up to and including codimension two, Segre-transversality is equivalent to minimality, at Zariski-generic points. At first, we need preliminary definition. As above, let M be a CR-generic submanifold of $\mathbb{C}^n$ with $m := \dim_{CR} M$ and $d = \operatorname{codim}_{\mathbb{R}} M$. We assume that M is real analytic or real algebraic. Let $p \in M$. Let $S_{\bar{q}}$ denote the Segre varieties associated with $q \in \mathscr{V}_{\mathbb{C}^n}(p)$, *cf.* (5.3). Remember that $q \in S_{\bar{p}}$ iff $p \in S_{\bar{q}}$. Following [5] and slightly refining the notions, we shall say that M is called Segre-transversal *at* p if for each neighborhood $V = \mathscr{V}_{\mathbb{C}^n}(p)$ of p, $\exists\, k \in \mathbb{N}_*$, $\exists\, p_1, \dots, p_k \in S_{\bar{p}} \cap V$ such that

$$T_p S_{\bar{p}_1} + \cdots + T_p S_{\bar{p}_k} = T_p \mathbb{C}^n. \tag{10.2}$$

Also, M is called Segre-transversal *in* p if for each neighborhood $V = \mathscr{V}_{\mathbb{C}^n}(p)$ of p, $\exists\, k \in \mathbb{N}_*$, $\exists\, q \in V$, $\exists\, p_1, \dots, p_k \in S_{\bar{q}} \cap V$ such that

$$T_q S_{\bar{p}_1} + \cdots + T_q S_{\bar{p}_k} = T_q \mathbb{C}^n. \tag{10.3}$$

Remark 6. Remarks **1.** Obviously, Segre-transversality *at* p implies Segre-transversality *in* p.

2. We observe that Segre-transversality at p *does not entail* that the second *Segre set* (*cf.* [2]) $S^2_{\bar{p}} := \cup_{q \in S_{\bar{p}} \cap V} S_{\bar{q}} \cap V$ contains an open set in $\mathbb{C}^n$, as shows the following example in $\mathbb{C}^3$, M $z_1 = \bar{z}_1 + iw\bar{w}$, $z_2 = \bar{z}_2 + iw^2\bar{w}^2$, or, more generally, as shows any M of codimension $d > 2m$.

3. Nevertheless, it is known and clear that *Segre-transversality at* p *entails minimality at* p, because it is easy to check in coordinates that all the Segre varieties $S_{\bar{p}_1}, \dots, S_{\bar{p}_k}$ must be contained in the intrinsic complexification $\mathscr{O}_p^{i_c}$ of the CR orbit of p (see also [2,9,14]), whence condition (10.2) forces $\mathscr{O}_p^{i_c}$ to be of dimension n.

Proposition 10.4 The following properties hold :

- "**(1)**" A connected CR-generic manifold $M \subset \mathbb{C}^n$ of codimension 1 or 2 is minimal at a Zariski-generic point if and only if it is Segre-transversal in at least one point $p \in M$.
- "**(2)**" The CR-generic manifold $M \subset \mathbb{C}^4$ of codimension 3 given by $z_1 = \bar{z}_1 + iw\bar{w}$, $z_2 = \bar{z}_2 + iw\bar{w}(w^2 + \bar{w}^2)$ and $z_3 = \bar{z}_3 + iw^3\bar{w}^3$ is minimal at 0 but not Segre-transversal in any point.

Proof. The example in part **(2)** is borrowed from [5]. Part **(1)** is new for the codimension $d = 2$. In order to prove this proposition, we plan now to give characterizations of Segre-transversalities. In fact, a characterization of Segre-transversality at a point is given in [5], but for M *rigid algebraic* only. We seek a general formulation. Thus, we assume that $p = 0$, $V = \Delta^n$ and

that M is given by (6.3). Let $q \in \Delta^n$, let $k \in \mathbb{N}^*$, let $p_1, \dots, p_k \in S_{\bar q} \cap \Delta^n$, *i.e.*

$$z_{p_j} = \bar z_q + i\bar\Theta(w_{p_j}, \bar w_q, \bar z_q), \qquad j = 1, \dots, k. \tag{10.5}$$

To compute $T_q S_{\bar p_j}$ is easy: $T_q S_{\bar p_j}$ is in fact generated by the m-vector field (*cf.* (6.2))

$$\mathscr{L} = \frac{\partial}{\partial w} + i\bar\Theta_w(w_q, \bar w_{p_j}, z_q - i\Theta(\bar w_{p_j}, w_q, z_q))\frac{\partial}{\partial z}, \tag{10.6}$$

i.e. by a collection $v^l = v^l(w_q, z_q, \bar w_{p_j})$ of vectors $l = 1, \dots, m$ of the form

$$(0, \dots, 1, \dots, 0, v_1^l(w_q, z_q, \bar w_{p_j}), \dots, v_d^l(w_q, z_q, \bar w_{p_j})) \in \mathbb{C}^m \times \mathbb{C}^d, \tag{10.7}$$

with 1 at the m-th place, $j = 1, \dots, k$. Let us denote by $\Lambda(w_q, z_q, \bar w_{p_j})$ the linear space generated by the v^l, for $l = 1, \dots, m$. By definition, M is Segre-transversal in p if and only if there exists q arbitrarily close to p and $p_1, \dots, p_k \in S_{\bar q}$ such that

$$\text{Span}\,(\Lambda(w_q, z_q, \bar w_{p_1}), \dots, \Lambda(w_q, z_q, \bar w_{p_k})) = \mathbb{C}^n. \tag{10.8}$$

Of course it suffices to choose $k = d + 1$ to test (10.8). We can also complexify (10.8) and get

$$\text{Span}\,(\Lambda(w, z, \zeta_1), \dots, \Lambda(w, z, \zeta_{d+1})) = \mathbb{C}^n. \tag{10.9}$$

Introducing all $n \times n$ minors of the system of $m(d+1)$ vectors $v^l(w, z, \zeta_j)$, $l = 1, \dots, m$, $j = 1, \dots, d+1$, denoting by N the number of such minors, we may build a holomorphic map $\mathbb{X}\ \mathscr{M}_\natural^{d+1} \to \mathbb{C}^N$ whose components are these minors and which satisfies $\mathbb{X}(t, 0, \dots, t, 0) \equiv 0$. We may equip with a projection $\pi_\natural\ \mathscr{M}_\natural^{d+1} \to \mathbb{C}_t^n$ the set

$$\mathscr{M}_\natural^{d+1} = \{(t_1, \tau_1, \dots, t_{d+1}, \tau_{d+1}) \in \mathscr{M}^{d+1}\ t_i = t_j, 1 \le i, j \le d+1\} \tag{10.10}$$

such that (10.9) holds at (w, z) if and only if there exists $p_\natural \in \pi_\natural^{-1}(w, z)$ with $\mathbb{X}(p_\natural) \neq 0$. Consequently (10.9) holds at $t = (w, z)$ if and only if

$$\mathbb{X}(t, \zeta_1, \dots, t, \zeta_{d+1}) \not\equiv_{\zeta_1, \dots, \zeta_{d+1}} 0 \in \mathbb{C}^N. \tag{10.11}$$

Now writing

$$\mathbb{X}(t, \zeta_1, \dots, t, \zeta_{d+1}) = \sum_{\gamma_\natural \in \mathbb{N}_*^{m(d+1)}} \zeta_\natural^{\gamma_\natural} \mathbb{X}_{\gamma_\natural}(w, z), \qquad \mathbb{X}_{\gamma_\natural}(w, z) \in \mathbb{C}^N, \tag{10.12}$$

we have got that there exist $\gamma_\natural \in \mathbb{N}_*^{m(d+1)}$ and $(w, z) \in \Delta^n$ such that $\mathbb{X}_{\gamma_\natural}(w, z) \neq 0$. As a usual consequence of analyticity (here of $\mathbb{X}$) we see that (10.9) holds at (w_q, z_q) if and only if (10.9) holds for every $(w, z) \in \Delta^n$ minus a proper complex analytic subset. We thus have proved:

Proposition 10.13 A connected real analytic or real algebraic CR-generic manifold M is Segre-transversal in a point if and only if it is Segre-transversal in every point. In that case M is Segre-transversal at every point

outside a proper real analytic or real algebraic subvariety. In this case, M is be called Segre-transversal.

Proof. Proof of Proposition 10.4 **(1)** If $d = 1$, it is very easy to check that M is Segre-transversal if and only if M is not Levi-flat if and only if it is minimal at a Zariski-generic point, *cf.* [5]. Thus, let $d = 2$ and assume that M is minimal at a Zariski-generic point. To simplify the notation, let us assume that $m = 1$. Then at a Zariski-generic point $p \in M$, the vector-valued Levi-form of M has rank 1. Further, the second order Lie brackets of T^cM must complete the tangent space to M at a Zariski-generic point (otherwise, the distribution spanned by T^cM and its first order Lie brackets is involutive and then M locally foliates in three-dimensional CR orbits, contradiction). Thus, there are holomorphic coordinates (w, z_1, z_2) vanishing at such a Zariski-generic point p in which the equations of M are $z_2 = \bar{z}_2 + iw\bar{w}\,[1 + O(|w|) + O(\bar{z}_2, \bar{z}_3)]$ and $z_3 = \bar{z}_3 + iw\bar{w}\,[w + \bar{w} + O(|w|^2) + O(\bar{z}_2, \bar{z}_3)]$. Choosing then a point $q = (w_q, 0, 0)$ with $w_q \neq 0$ small, it is easy to check that condition (10.8) is satisfied for suitable points $p_1, p_2, p_3 \in S_{\bar{q}}$ with $w_{p_1} = 0$, and w_{p_2}, w_{p_3} small. The general case $m \geq 2$ is similar or can be reduced to the case $m = 1$ by slicing. This completes the proof of Proposition 10.4. □ □

□

§11. Algebraicity of the reflection mapping and transcendence degree of the mapping

11.1. Introduction. Now, to end-up this article, we come to the description of an equivalent formulation of our main Theorem 2.5. An interesting invariant of which to show analyticity (in case f is in $\mathscr{C}^\infty_{CR}$ and M, M' are real analytic) or algebraicity (in case f is already holomorphic, and M, M' are real algebraic), is the so-called "*reflection mapping*" (*see* [11], where the interest of its study *with no nondegeneracy condition on* M' was pointed out for the first time). The reflection mapping is the holomorphic map $\mathbb{C}^n \times \mathbb{C}^{n'} \ni (t, \tau') \mapsto \xi' - Q'(\zeta', f(t)) \in \mathbb{C}^{d'}$, where $\bar{z}' = Q'(\bar{w}', t')$ is a local system of d' defining equations for M' as in §6.1 above. Let us denote it by $\mathscr{R}'_f(t, \tau')$, where $\tau' = (\zeta', \xi')$. Clearly, $\mathscr{R}'_f$ is relatively algebraic with respect to τ' and *a priori* only holomorphic with respect to t.

Theorem 11.2 ($d = 1$: [12]) Let $h\ M \to M'$ be a holomorphic map of generic rank n between two small pieces of connected somewhere minimal CR-generic real algebraic submanifolds of $\mathbb{C}^n$ of the same CR dimension $m \geq 1$ and of codimension $d \geq 1$. Then the reflection mapping $\mathscr{R}'_h$ associated with h and an arbitrary local system of coordinates for M' as above is complex algebraic with respect to both variables (t, τ').

Proof. Using the biholomorphic invariance of Segre varieties, one can check that the algebraicity of $\mathscr{R}'_h$ is preserved under changes of algebraic coordinates fixing a point and under small shifts of a center point $p' \in M'$

(exercise). Thus, after a slight delocalization, namely after an arbitrarily small shift of the center point, and after a change of algebraic coordinates as in Theorem 9.10, we can assume that $f\ (M,p) \to (M',p')$ is a local biholomorphic mapping with $M' = \Delta^{\kappa'} \times \underline{M}'$, $\kappa' := \kappa_{M'}$. Composing f with a projection, we get a submersive local holomorphic map $\underline{f}\ M \to \underline{M}'$, with $\underline{M}'$ minimal for inclusion. Since $\kappa_{\underline{M}'} = 0$, Theorem 3.1 yields that $\underline{f}$ is algebraic. Notice that there exist coordinates $t' = (w',z') = (u',v',z') \in \mathbb{C}^{m'-\kappa'} \times \mathbb{C}^{\kappa'} \times \mathbb{C}^{d'}$ as in §6.1 such that the equations of (M',p') are independent of $(v',\bar{v}')$, namely $\bar{z}' = Q'(\bar{u}',u',z')$. Let $(u',v',z')^c =: (\mu',\nu',\xi')$. Finally, the reflection mapping $\mathscr{R}'_f(t,\tau') = \xi' - Q'(\mu',\underline{f}(t)) \in \mathbb{C}^{d'}$ is then obviously algebraic, because $\underline{f}$ is. The proof of Theorem 11.2 is complete. $\square$ $\square$

11.3. Algebraicity of the reflection mapping with no rank assumption. More generally, by similar arguments, we shall now establish that *the algebraicity of the reflection mapping associated with $f\ M \to M'$ is in fact equivalent to Theorem 2.5.* An important assumption will be that M' is here minimal for inclusion containing $f(M)$.

Theorem 11.4 Let f be a local holomorphic map $(M,p) \to (M',p')$ between two real algebraic CR-generic manifolds with (M,p) minimal at a Zariski-generic point, with (M',p') minimal for inclusion containing $f(M,p)$ and given by d' equations of the form $\bar{z}'_l = Q'_l(\bar{w}',t')$, $l = 1,\dots,d'$. Then the reflection mapping:

$$(\mathbb{C}^n,p) \times (\mathbb{C}^{n'},\bar{p}') \ni (t,\bar{\nu}') \mapsto (\xi'_l - Q'_l(\zeta',h(t)))_{1\le l\le d'} \in \mathbb{C}^{d'} \tag{11.5}$$

extends as an algebraic map of $(t,\tau') \in \mathbb{C}^n \times \mathbb{C}^{n'}$. Conversely, if the above-defined reflection mapping is algebraic, then $\nabla^{tr}(f) \le \kappa_{M'}$.

Proof. Since M' is minimal for inclusion and since the exceptional set of points q' in a neighborhood of which $M' \cap \mathscr{V}_{\mathbb{C}^{n'}}(q')$ is not equivalent to a product $\Delta^{\kappa_{M'}} \times \underline{M}'$ is a proper real algebraic subvariety of M' (*cf.* Theorems 9.10 and 9.16), then $f(M)$ encounters in fact the set of points q' for which $M' \cap \mathscr{V}_{\mathbb{C}^{n'}}(q') \cong_{\mathscr{A}} \Delta^{\kappa_{M'}} \times \underline{M}'$. As in the proof of Theorem 11.2, we then deduce the algebraicity of $\mathscr{R}'_f$.

Conversely, let M' be minimal for inclusion, let $M' = \Delta^{\kappa'} \times \underline{M}'$ in a neighborhood of q' close to p', with $\kappa' := \kappa_{M'}$, choose coordinates (u',v',z') vanishing at q' as above and assume that $\xi' - Q'(\mu',\underline{f}(t))$ is algebraic. Differentiating with respect to μ', we deduce that the functions $\frac{1}{\beta!}\,[\partial^\beta_{\mu'} Q'(\mu',\underline{f}(t))]_{\mu'=0} =: Q'_\beta(\underline{f}(t))$, $\beta \in \mathbb{N}^{m'-\kappa'}$, are algebraic. By Theorem 9.16 **(2)**, it follows from the assumption $\kappa_{\underline{M}'} = 0$ that the set E' of points $(u',z') \in \underline{M}'$ at which all $d' \times d'$ minors of the Jacobian matrix of $\mathscr{Q}'(t') = (Q'_{l,\beta}(u',z'))_{1\le l\le d',\,\beta\in\mathbb{N}^{m'-\kappa'}}$ vanish is a proper real algebraic subvariety of M'. By minimality for inclusion of M', it follows that $\underline{f}(M,p)$ is not contained in E'. Using then the algebraic implicit function

theorem we deduce that $\underline{f}$ is algebraic. This implies that $\nabla^{tr}(f) \leq \kappa'$, as desired. $\square$ $\square$

11.6. Algebraic approximation. Let us conclude this paper with a nice application of Theorem 11.4. We need some preliminary. Under the assumptions of Theorem 11.4, let $t \in \mathbb{C}^n$, $t' \in \mathbb{C}^{n'}$ be coordinates vanishing at p, p'. Let us denote $r(t,\tau) := z - \bar{Q}(w,\tau)$ and $r'(t',\tau') := z' - \bar{Q}'(w',\tau')$, whence $\bar{r}(\tau,t) = \xi - Q(\zeta,t)$ and $\bar{r}'(\tau',t') = \xi' - Q'(\zeta',t')$. Because M and M' are real, there exist a $d \times d$ matrix $a(t,\tau)$ of holomorphic algebraic functions with $a(0) = -I_{d\times d}$ and $r(t,\tau) \equiv a(t,\tau)\,\bar{r}(\tau,t)$, and similarly $a'(t',\tau')$ with $a'(0) = -I_{d'\times d'}$ and $r'(t',\tau') \equiv a'(t',\tau')\,\bar{r}'(\tau',t')$. Since (M,p) is mapped in (M',p'), there exist a $d' \times d$ matrix $b(t,\tau)$ of holomorphic functions such that $r'(f(t),\bar{f}(\tau)) \equiv b(t,\tau)\,r(t,\tau)$. Here, $f(t) \in \mathbb{C}\{t\}^{n'}$ is a power series vanishing at 0. Finally, we set $Q'(\zeta',t') := \sum_{\beta\in\mathbb{N}^{m'}} \zeta'^{\beta}\, Q'_\beta(t')$. Then it follows from Theorem 11.4 that for each $\beta \in \mathbb{N}^{m'}$, the function $\varphi'_\beta(t) := Q'_\beta(f(t)) = \frac{1}{\beta!}[\partial^\beta_{\zeta'} Q'(\zeta', f(t))]_{\zeta'=0}$ is algebraic. By applying the algebraic approximation theorem of Artin [1] to the collection of holomorphic algebraic equations $Q'_\beta(t') - \varphi'_\beta(t) = 0$, we deduce that for each integer $N \in \mathbb{N}_*$, there exists a holomorphic algebraic mapping $F\ (\mathbb{C}^n, p) \to (\mathbb{C}^{n'}, p')$, namely $F(t) \in \mathbb{C}\{t\}^{n'}$, which is algebraic, such that $Q'_\beta(F(t)) = \varphi'_\beta(t)$ for all $\beta \in \mathbb{N}^{m'}$ and $F(t) \equiv f(t) \pmod{|t|^N}$. We observe that it follows that F maps (M,p) in (M',p').

Lemma 11.7 Suppose that $F(t) \in \mathbb{C}\{t\}^{n'}$ satisfies $Q'_\beta(F(t)) = Q'_\beta(f(t))$. Then $r'(F(t), \bar{F}(\zeta, Q(\zeta,t))) \equiv 0$ in $\mathbb{C}\{\zeta,t\}^{n'}$.

Proof. Indeed, if we denote $f = (g,h) \in \mathbb{C}^{m'} \times \mathbb{C}^{d'}$, we have first $\bar{h}(\zeta, Q(\zeta,t)) \equiv \sum_{\beta\in\mathbb{N}^{m'}} \bar{g}(\zeta, Q(\zeta,t))^\beta\, Q'_\beta(F(t))$. Let us write $F = (G,H) \in \mathbb{C}^{m'} \times \mathbb{C}^{d'}$. First, from the relation $r'(F(t),\bar{f}(\tau)) \equiv a'(F(t),\bar{f}(\tau))\,\bar{r}'(\bar{f}(\tau),F(t))$, we deduce $H(t) \equiv \sum_{\beta\in\mathbb{N}^{m'}} G(t)^\beta\, \bar{Q}'_\beta(\bar{f}(\tau))$. As the coordinates (ζ,t) and (w,τ) are equivalent on $\mathscr{M}$, we deduce $H(w,\bar{Q}(w,\tau)) \equiv \sum_{\beta\in\mathbb{N}^{m'}} G(w,\bar{Q}(w,\tau))^\beta\, \bar{Q}'_\beta(\bar{f}(\tau))$. Finally, we get $H(w,\bar{Q}(w,\tau)) \equiv \sum_{\beta\in\mathbb{N}^{m'}} G(w,\bar{Q}(w,\tau))^\beta\, \bar{Q}'_\beta(\bar{F}(\tau))$, as desired. $\square$ $\square$

In particular, we obtain the following interesting application. Let $f\ (M,p) \to (M',p')$ be a biholomorphic equivalence between two real algebraic CR-generic manifolds such that (M,p) is minimal at a Zariski-generic point. Then there exists an algebraic holomorphic equivalence $F\ (M,p) \to (M',p')$. Is such a property also true for nowhere minimal CR-generic manifolds ?

REFERENCES

[1] M. Artin : Algebraic approximation of structures over complete local rings, Inst. Hautes Études Sci. Publ. Math., 36, 1969, 23–58

[2] M.S. Baouendi, P. Ebenfelt and L.P. Rothschild : Algebraicity of holomorphic mappings between real algebraic sets in $\mathbb{C}^n$, Acta Math., 177, 1996, no.2, 225–273

[3] S. Bochner and W. Martin: Several Complex Variables, Princeton Math. Ser. 10, Princeton Univ. Press, Princeton, NJ, 1949

[4] E. Chirka : An introduction to the geometry of CR manifolds, Russian Math. Surveys (no 1), 46, 1991, 95–197

[5] B. Coupet, F. Meylan and A. Sukhov : Holomorphic maps of algebraic CR manifolds, International Mathematics Research Notices, 1999, no 1, 1–29

[6] B. Coupet, S. Pinchuk and A. Sukhov : On the partial analyticity of CR mappings, Math. Z., 235, 2000, 541–557

[7] S. Damour : Algébricité d'applications holomorphes entre sous-variétés CR réelles algé-briques de $\mathbb{C}^n$, Preprint, Université de Provence, 26, 1999, 1–45

[8] X. Huang : On the mapping problem for algebraic real hypersurfaces in the complex spaces of different dimension, Ann. Inst. Fourier Grenoble, 44, 1994, 433–463

[9] J. Merker: Vector field construction of Segre sets ; e-print : `arXiv.org/abs/math.CV/9901010`, Trans. Amer. Math. Soc. to appear.

[10] J. Merker: Note on double reflection and algebraicity of holomorphic mappings ; e-print : `arXiv/abs/math/9905024`, Ann. Fac. Sci. Toulouse, to appear.

[11] J. Merker and F. Meylan : On the Schwarz symmetry principle in a model case, Proc. Amer. Math. Soc., 127, 1999, 1197–1102

[12] N. Mir : Germs of holomorphic mappings between real algebraic hypersurfaces , Ann. Inst. Fourier Grenoble, 48, 1998, 1025–1043

[13] S. Pinchuk : CR transformations of real manifolds in $\mathbb{C}^n$, Indiana University Mathematics Journal, 41 , 1992, 1–16

[14] R. Sharipov and A. Sukhov: On CR mappings between algebraic Cauchy-Riemann manifolds and separate algebraicity for holomorphic functions, Trans. Amer. Math. Soc., 348,1996, 767–780

[15] N. Stanton : Infinitesimal CR automorphisms of real hypersurfaces, Amer. J. Math., 1996, 118, 209–233

[16] A. Sukhov : On the mapping problem for quadric Cauchy-Riemann manifolds, Indiana Univ. Math. J., 42, 1993, 27–32

[17] H. J. Sussmann: Orbits of families of vector fields and integrability of distributions, Trans. Amer. Math. Soc., 180, 1973, 171–188

[18] S. M. Webster: On the mapping problem for algebraic real hypersurfaces, Invent. Math., 43, 1977, no. 1, 53–68

[19] D. Zaitsev : Algebraicity of local holomorphisms between real algebraic submanifolds in complex spaces, Acta Math., 183, 1999, 273–305

Propagation of analyticity for essentially finite $\mathscr{C}^\infty$-smooth CR mappings

Joël Merker

Abstract. An analytico-geometric reflection principle is established by means of normal deformations of analytic discs.

Table of contents

1. Introduction ..... **211.**
2. Preliminaries and statement of the main theorem ..... **212.**
3. Polynomial identities ..... **214.**
4. Proof of Lemma 2.11 ..... **216.**
5. Description of the proof of Theorem 2.9 ..... **217.**
6. Rings of CR functions and their fields of fractions ..... **220.**
7. Statement of Main Lemma 7.1 ..... **223.**
8. Localization at a nice boundary point ..... **227.**
9. Construction of analytic discs ..... **229.**
10. Meromorphic extension ..... **231.**
11. Proof of Lemma 2.12 ..... **234.**
12. References ..... **235.**

[With 5 figures]

Manuscripta Math. **115** (2004), 313–338.

§1. Introduction

The analyticity of local $\mathscr{C}^\infty$-smooth CR diffeomorphisms between two essentially finite generic real analytic submanifolds of $\mathbb{C}^n$ is established in [3], as a kind of reflection principle, provided that all the components of the CR diffeomorphism extend holomorphically to a fixed wedge (the so-called notion of *essential finiteness* appeared in the work [14] by K. Diederich and S.M. Webster; a further geometric reflection principle for locally finite $\mathscr{C}^\infty$-smooth CR mappings appeared in the work [12] by K. Diederich and J.E. Fornæss). In [4], [5] and more recently in [8], [9], [8], [25] (*cf.* also the applications [7], [26]), separate assumptions on the map and on the target have been unified: instead, it is assumed that the so-called *characteristic variety* is zero-dimensional at the central point. However, in these references, it is always supposed that the source generic submanifold is minimal at the central point, whereas, in [3], no minimality assumption was needed. This article is devoted to fill the gap between these two trends of thought, applying the technique of normal deformations of analytic discs borrowed from [34], [23], [24].

§2. Preliminaries and statement of the main theorem

2.1. Initial data. Let $\mathbb{K} = \mathbb{R}$ or $\mathbb{C}$. Let $\nu \in \mathbb{N}$. Let $\mathsf{x} \in \mathbb{K}^\nu$. Set $|\mathsf{x}| := \max_{1 \leq i \leq \nu} |\mathsf{x}_i|$. For $\rho > 0$, denote $\Delta_n(\rho) := \{\mathsf{x} \in \mathbb{K}^\nu : \ |\mathsf{x}| < \rho\}$.

Consider a local $\mathscr{C}^\infty$-smooth CR mapping between two local generic submanifolds M in $\mathbb{C}^n$ and M' in $\mathbb{C}^{n'}$, defined *precisely* as follows (background material may be found in [2], [21]). The purpose is to avoid the (ambiguous) language of germs.

Definition 2.2. A *local $\mathscr{C}^\infty$-smooth CR mapping* consists of the following data.

(I) A *local generic submanifold M in $\mathbb{C}^n$* of positive codimension $d \geq 1$ and of positive CR dimension $m := n - d \geq 1$ passing through a point $p_0 \in \mathbb{C}^n$ and defined in coordinates $t = (z, w) = (x + iy, u + iv) \in \mathbb{C}^m \times \mathbb{C}^d$ vanishing at p_0 as a graph:

$$M = \{(z, w) \in \Delta_n(\rho_1) : \ v_j = \varphi_j(x, y, u), \ j = 1, \dots, d\}, \tag{2.3}$$

where the functions φ_j are real analytic on $\Delta_{2m+d}(2\rho_1)$, for some $\rho_1 > 0$. It is also required for all ρ with $0 \leq \rho \leq 2\rho_1$, that $|\varphi(x, y, u)| < \rho$ if $|(x, y, u)| < \rho$, namely M is a uniformly approximatively horizontal graph. Of course, after perhaps shrinking $\rho_1 > 0$, this condition is automatically satisfied if the coordinates are adjusted at the beginning in order that $T_0 M = \{v = 0\}$. In fact, it is more convenient to work with a local representation of M by complex defining equations

$$M = \{(z, w) \in \Delta_n(\rho_1) : \ \bar{w}_j = \Theta_j(\bar{z}, z, w), \ j = 1, \dots, d\}, \tag{2.4}$$

obtained by applying the implicit function theorem to (2.3), where of course, one may assume that the Θ_j converge normally for $|(\bar{z}, z, w)| < 2\rho_1$ and that for all ρ with $0 \leq \rho \leq 2\rho_1$, one has $|\Theta_j(\bar{z}, z, w)| < \rho$ if $|(\bar{z}, z, w)| < \rho$.

(II) A local generic submanifold M' in $\mathbb{C}^{n'}$ with central point p'_0 of positive codimension $d' \geq 1$ and of positive CR dimension $m' := n' - d' \geq 1$ passing through a point $p'_0 \in \mathbb{C}^n$ and defined in coordinates $t' = (z', w') \in \mathbb{C}^{m'} \times \mathbb{C}^{d'}$ similarly as in (2.4).

(III) A $\mathscr{C}^\infty$-smooth mapping $t' = h(t) = (f(t), g(t)) = (z', w')$ with $h(p_0) = p'_0$ which is defined in $M \cap \Delta_n(\rho_1) \equiv M$ and which satisfies for some two radii ρ_2, ρ'_2 with $0 < \rho_2 < \rho_1$, $0 < \rho'_2 < \rho'_1$, the condition

$$h\left(M \cap \Delta_n(\rho_2)\right) \subset M' \cap \Delta'_{n'}(\rho'_2). \tag{2.5}$$

By [6] (and also [2]), after shrinking (if necessary) $\rho_1 > 0$ and $\rho_2 > 0$ with $0 < \rho_2 < \rho_1$:

(IV) every $\mathscr{C}^\infty$-smooth CR function defined on $M \cap \Delta_n(\rho_1)$ (and in particular the n' components $h_1, \dots, h_{n'}$ of h) is a uniform limit of polynomials on $M \cap \Delta_n(\rho_2)$.

Definition 2.6. A *complete wedge in* $\Delta_n(\rho_2)$ *with edge* $M \cap \Delta_n(\rho_2)$ is a subset of $\mathbb{C}^n$ of the form $\mathscr{W} = \mathscr{W}(M, C, \Delta_n(\rho_2)) = \{(z, w) \in \Delta_n(\rho_2);\ v - \varphi(x, y, u) \in C\}$, where C is some open strictly convex infinite (*i.e.* not truncated) cone in $\mathbb{R}^d$.

As in [3], it will be assumed that:

(V) there exists a complete wedge $\mathscr{W}_2$ in $\Delta_n(\rho_2)$ with edge $M \cap \Delta_n(\rho_2)$ such that the n components of h extend holomorphically to $\mathscr{W}_2$.

2.7. CR differentiations. Put $r_j(t, \bar{t}) := \bar{w}_j - \Theta_j(\bar{z}, z, w)$ for $j = 1, \dots, d$ and and $r'_{j'}(t', \bar{t}') := \bar{w}'_{j'} - \Theta'_{j'}(\bar{z}', z', w')$ for $j' = 1, \dots, d'$. Let $\overline{L}_1, \dots, \overline{L}_m$ be an arbitrary basis of $(0, 1)$ vector fields tangent to M having real analytic coefficients (the most convenient is written in (3.2) below). Consider the *first characteristic variety of* h *at* p_0 to be the complex analytic subset $\mathbb{V}'_0$ of $\Delta'_{n'}(\rho'_2)$ consisting of elements t' satisfying the equations

$$\left[\overline{L}^\beta r'_{j'}(t', \overline{h(t)})\right]\Big|_{\bar{t}=0} = 0, \text{ for all } j' = 1, \dots, d' \text{ and all } \beta \in \mathbb{N}^m. \tag{2.8}$$

It is indeed a complex analytic subset defined as the zero set of an infinite collection of functions which are holomorphic in $\Delta_{n'}(\rho'_2)$. By (2.5), $r'_{j'}\left(h(t), \overline{h(t)}\right) = 0$, for $j' = 1, \dots, d'$ and for all $t \in M$. It follows that the origin p'_0 belongs to the complex analytic subset $\mathbb{V}'_0$. The focus is on the dimension at p'_0 of $\mathbb{V}'_0$. The map h will be called *essentially finite at* p_0 if $\dim_{p'_0} \mathbb{V}'_0 = 0$. Denote by $\mathscr{O}_{CR}(M, p_0)$ the (not local) CR orbit of p_0 in M. The main result is as follows.

Theorem 2.9. *Let* $h : M \to M'$ *be a local* $\mathscr{C}^\infty$*-smooth CR mapping between two real analytic local generic submanifolds of* $\mathbb{C}^n$ *and of* $\mathbb{C}^{n'}$*. Assume that there exists a complete wedge* $\mathscr{W}_2$ *in* $\Delta_n(\rho_2)$ *with edge* $M \cap \Delta_n(\rho_2)$ *such that the* n' *components of* h *extend holomorphically to* $\mathscr{W}_2$*, assume that there exist points*

$$q_0 \in \mathscr{O}_{CR}(M, p_0) \cap \Delta_n(\rho_2) \tag{2.10}$$

arbitrarily close to p_0 *at which* h *is real analytic and assume that* h *is essentially finite at* p_0*. Then there exists a radius* $\rho_3 > 0$ *with* $0 < \rho_3 < \rho_2 < \rho_1$ *such that* h *extends holomorphically to* $\Delta_n(\rho_3)$*.*

In the version of Theorem 2.9 published in [8], [25], it is assumed that M is minimal at p_0, which entails the holomorphic extendability assumption **(V)**, thanks to [33]. In [8], [25], there is a crucial proposition about envelopes of meromorphy (same statement and same proof in the two references – albeit notations differ), relying on subtle geometric arguments which stem from the theory of deformations of analytic discs developed in [1], [33], [23]. In this article, the purpose is to clean up and to simplify these geometric arguments, by means of the propagation of wedge extendability theorem established in [32], [34] (*cf.* [16] for a preliminary version).

The stronger Theorem 2.9 will be established thanks to this change of geometric point of view. An elementary lemma applies to recover from Theorem 2.9 the main result of [8], [25].

Lemma 2.11. *Let $h : M \to M'$ be a local $\mathscr{C}^\infty$-smooth CR mapping between two real analytic local generic submanifolds of $\mathbb{C}^n$ and of $\mathbb{C}^{n'}$. Assume that M is minimal at p_0, so that $\mathscr{O}_{CR}(M, p_0)$ contains $M \cap \Delta_n(\rho_2)$ for some $\rho_2 > 0$ and so that* (*thanks to* [33]) *after perhaps shrinking $\rho_2 > 0$, the assumption* **(V)** *holds. If h is essentially finite at p_0, then there exist points $q_0 \in M \cap \Delta_n(\rho_2)$ arbitrarily close to p_0 at which h is real analytic.*

Finally, in order to recover the main result of [3], remind that the essential finiteness of M' at p'_0 together with the CR diffeomorphism assumption entails the essential finiteness of h at p_0 ([8], Lemma 4.1; a more general version is Corollary 1.3 in [25]; the most general version appears as Theorem 4.3.1 **(3)** in [21], in which it is shown that CR-transversality of h at p_0 together with essential finiteness of M' at p'_0 implies that h is essentially finite at p_0). In [3], it is observed that essential finiteness of a hypersurface M at one of its points p_0 implies its minimality (finite type in the sense of Lie-Chow-Kohn-Bloom-Graham) at p_0. Here are further observations.

Lemma 2.12. *If M' is a local generic submanifold of $\mathbb{C}^{n'}$ passing through a point p'_0 which is essentially finite at p'_0, then $\dim_{\mathbb{R}} \mathscr{O}_{CR}(M', p'_0) \geq 2\mathrm{CRdim}\, M' + 1$ and the CR orbit $\mathscr{O}_{CR}(M', p'_0)$ itself is essentially finite at p'_0. Furthermore, in the case where M is a real analytic hypersurface, essential finiteness of h at p_0 implies that M is minimal at p_0.*

Assume that $n = n'$ and that h is a CR diffeomorphism. Then there exists a Zariski-dense open subset of points $q'_0 \in \mathscr{O}_{CR}(M', p'_0)$ at which M' is finitely nondegenerate. It follows that h itself is finitely nondegenerate at $q_0 := h^{-1}(q'_0)$, and by a known result ([28], [9], [2], [19]), h is real analytic at q_0. Applying then Theorem 2.9:

Corollary 2.13. ([3]) *Let $h : M \to M'$ be a local $\mathscr{C}^\infty$-smooth CR mapping which is a CR diffeomorphism. If M is essentially finite at p_0 and if the components of h extend holomorphically to a wedge at p_0, then h is real analytic at p_0.*

Further applications (in the spirit of [7], [26]) that may be stated are left to the interested reader. The remainder of this article is devoted to the proofs of Theorem 2.9, of Lemma 2.11 and of Lemma 2.12.

§3. Polynomial identities

3.1. Differentiations. Denote by $\overline{L}_1, \ldots, \overline{L}_m$ the basis of $(0,1)$ vector fields tangent to M defined explicitely by

$$\overline{L}_k := \frac{\partial}{\partial \bar{z}_k} + \sum_{j=1}^{d} \frac{\partial \Theta_j}{\partial \bar{z}_k}(\bar{z}, z, w)\, \frac{\partial}{\partial \bar{w}_j}. \tag{3.2}$$

Here, the coefficients of the vector fields $\overline{L}_k$ are holomorphic with respect to w. Since it will be more convenient for later use to have antiholomorphic dependence with respect to w, replace w by $\overline{\Theta}(z,\bar{z},\bar{w})$ (which is possible when (z,w) belongs to M), and write the vector fields under the form

$$\overline{L}_k := \frac{\partial}{\partial \bar{z}_k} + \sum_{j=1}^{d} \frac{\partial \Theta_j}{\partial \bar{z}_k}\left(\bar{z}, z, \overline{\Theta}(z,\bar{z},\bar{w})\right) \frac{\partial}{\partial \bar{w}_j}. \tag{3.3}$$

Apply the derivations $(\overline{L})^\beta$, $\beta \in \mathbb{N}^m$, to $r'_{j'}\left(h(t), \overline{h(t)}\right) = 0$, which yields

$$(\overline{L})^\beta\, r'_{j'}\left(h(t), \overline{h(t)}\right) = 0, \tag{3.4}$$

for $t \in M \cap \Delta_n(\rho_2)$ and for $j' = 1, \ldots, d'$.

As the coefficients of the vector fields $\overline{L}_k$ are holomorphic with respect to $(z,\bar{t})$, the differentiated equations (3.4) may be rewritten under the developed form:

$$R'_{j',\beta}\left(z, \bar{t}, J_{\bar{t}}^{|\beta|}\overline{h(t)} : h(t)\right) = 0. \tag{3.5}$$

Here, $J_{\bar{t}}^{\ell}\overline{h}(\bar{t}) := \left(\partial_{\bar{t}}^{\alpha}\overline{h_{i'}(t)}\right)_{1\leq i'\leq n',\, |\alpha|\leq \ell}$ denotes the ℓ-th jet of $\overline{h}(\bar{t})$. By construction, the functions $R'_{j',\beta} = R'_{j',\beta}\left(z, \bar{t}, \overline{J}^{|\beta|} : t'\right)$ are holomorphic with respect to z, $\bar{t}$ with $|z| < \rho_2$, $|\bar{t}| < \rho_2$, they are holomorphic with respect to the zero-th order jet $J_{\bar{t}}^{0}\overline{h}(\bar{t}) \equiv \overline{h}(\bar{t})$ with $|J_{\bar{t}}^{0}| < \rho'_2$, they are relatively polynomial with respect to the nonzero derivatives $\left(\partial_{\bar{t}}^{\alpha}\overline{h_{i'}(t)}\right)_{1\leq i'\leq n',\, 1\leq |\alpha|\leq |\beta|}$, and they are relatively holomorphic with respect to t' with $|t'| < \rho'_2$.

By the main assumption of essential finiteness, there exists an integer $\ell_0 \geq 1$ such that the complex analytic subset defined by the equations

$$R'_{j',\beta}\left(0, 0, J_{\bar{t}}^{|\beta|}\overline{h}(0) : t'\right) = 0, \qquad j' = 1, \ldots, d',\ |\beta| \leq \ell_0, \tag{3.6}$$

which passes through the origin in $\mathbb{C}^{n'}$, is of dimension zero at the origin.

By [2], chapter 5, it follows that there exists ρ_3 with $0 < \rho_3 < \rho_2$, there exists ρ'_3 with $0 < \rho'_3 < \rho'_2$, there exists ε with $\varepsilon > 0$ and for all $i' = 1, \ldots, n'$, there exist monic Weierstrass polynomials $P_{i'}\left(z, \bar{t}, J_{\bar{t}}^{\ell_0} : t'_{i'}\right)$ of the form

$$P_{i'}\left(z, \bar{t}, J_{\bar{t}}^{\ell_0} : t'_{i'}\right) = (t'_{i'})^{N'_{i'}} + \sum_{1\leq I'\leq N'_{i'}} H_{i',I'}\left(z, \bar{t}, J_{\bar{t}}^{\ell_0}\right)\, (t'_{i'})^{N'_{i'}-I'}, \tag{3.7}$$

with coefficients $H_{i',I'}$ being holomorphic with respect to z, $\bar{t}$ with $|z| < \rho_3$, $|\bar{t}| < \rho_3$ and with respect to $J_{\bar{t}}^{\ell_0}$ with $\left|J_{\bar{t}}^{\ell_0} - J_{\bar{t}}^{\ell_0}\overline{h}(0)\right| < \varepsilon$, with moreover $\left|J_{\bar{t}}^{\ell_0}\overline{h(t)} - J_{\bar{t}}^{\ell_0}\overline{h}(0)\right| < \varepsilon$ for all $t \in M \cap \Delta_n(\rho_3)$, such that the complex analytic set

(3.8)
$$\left\{\left(z, \bar{t}, J_{\bar{t}}^{\ell_0}, t'\right) :\ R'_{j',\beta}\left(z, \bar{t}, J_{\bar{t}}^{|\beta|} : t'\right) = 0,\ j' = 1, \ldots, d',\ |\beta| \leq \ell_0\right\}$$

is contained in the zero-set of all Weierstrass polynomials $P_{i'}$, namely the set:

$$\left\{\left(z,\bar{t},J_{\bar{t}}^{\ell_0},t'\right):\ P_{i'}\left(z,\bar{t},J_{\bar{t}}^{\ell_0}:\ t'_{i'}\right)=0,\ i'=1,\dots,n'\right\}. \tag{3.9}$$

Thanks to Hilbert's Nullstellensatz, there exists an integer $\nu \geq 1$ such that for $i' = 1,\dots,n'$, the powers $(P_{i'})^\nu$ belong to the ideal generated by the $R'_{j',\beta}$. Consequently, each component $h_{i'}(t)$ satisfies the monic polynomial equation

$$(h_{i'}(t))^{N'_{i'}} + \sum_{1\leq I'\leq N'_{i'}} H_{i',I'}\left(z,\bar{t},J_{\bar{t}}^{\ell_0}\overline{h(t)}\right)(h_{i'}(t))^{N'_{i'}-I'} = 0, \tag{3.10}$$

for all $t \in M \cap \Delta_n(\rho_3)$. Here, notably, each component $h_{i'}(t)$ is separated from the others.

§4. Proof of Lemma 2.11

To establish Lemma 2.11, let ρ_2 be as in its statement and let ρ_3 be as in §3 just above. Shrinking ρ_3 if necessary, assume $0 < \rho_3 < \rho_2$ to fix ideas.

Fix $i' := 1$ and consider the following trivial dichotomy: either

$$\frac{\partial P_1}{\partial t'_1}\left(z,\bar{t},J_{\bar{t}}^{\ell_0}\overline{h(t)}:\ h_1(t)\right)=0, \tag{4.1}$$

for all $t \in M \cap \Delta_n(\rho_3)$ or

$$\frac{\partial P_1}{\partial t'_1}\left(z,\bar{t},J_{\bar{t}}^{\ell_0}\overline{h(t)}:\ h_1(t)\right)\not\equiv 0, \tag{4.2}$$

over $M \cap \Delta_n(\rho_3)$. In the first case, replace the equation $P_1\left(z,\bar{t},J_{\bar{t}}^{\ell_0}\overline{h(t)}:\ h(t)\right)=0$ by the equation (4.1), which is a monic polynomial of degree $N'_{i'}-1$ in $h_{i'}(t)$. After a finite number of steps, the second case (4.2) holds, with a monic polynomial of lower degree, still denoted by P_1. Pick a point $q_1 \in M \cap \Delta_n(\rho_3)$ together with an open neighborhood $\omega_1 \subset M \cap \Delta_n(\rho_3)$ of q_1 so that $\frac{\partial P_1}{\partial t'_{i'}}\left(z_{q_1},\bar{t}_{q_1},J_{\bar{t}}^{\ell_0}\overline{h(t_{q_1})}:\ h(t_{q_1})\right)\neq 0$ for all $t \in \omega_1$, whereas $P_1\left(z_{q_1},\bar{t}_{q_1},J_{\bar{t}}^{\ell_0}\overline{h(t_{q_1})}:\ h(t_{q_1})\right)\equiv 0$ over ω_1. Fix now $i' := 2$. Apply the same dichotomy as (4.1), (4.2) to $\frac{\partial P_2}{\partial t'_2}$, but for t running only over ω_1. Process as in the case $i'_1 = 1$ to replace P_2 by a monic polynomial of minimal degree, chose q_2 and ω_2, *etc.*

After n' steps, there exists a point $q_0 \in M \cap \Delta_n(\rho_3)$, there exists an open neighborhood $\omega_0 \subset M \cap \Delta_n(\rho_3)$ of q_0, there exists monic polynomials, still denoted by $P_1,\dots,P_{n'}$ which are of the form (3.7), such that

$$P_{i'}\left(z,\bar{t},J_{\bar{t}}^{\ell_0}\overline{h(t)}:\ h_{i'}(t)\right)=0, \tag{4.3}$$

for all $t \in \omega_0$ but

$$\frac{\partial P_{i'}}{\partial t'_{i'}}\left(z,\bar{t},J_{\bar{t}}^{\ell_0}\overline{h(t)}:\ h_{i'}(t)\right)\neq 0, \tag{4.4}$$

for all $t \in \omega_0$. Apply then the implicit function theorem to the identities (4.3), to solve

$$h(t) = \Psi\left(z, \bar{t}, J_{\bar{t}}^{\ell_0}\overline{h(t)}\right), \tag{4.5}$$

for all t in a (possibly smaller) neighborhood of q_0, where Ψ is a certain complex analytic $\mathbb{C}^{n'}$-valued mapping defined in a neighborhood of $\left(z_{q_0}, \bar{t}_{q_0}, J_{\bar{t}}^{\ell_0}\overline{h(t_{q_0})}\right)$ in $\mathbb{C}^m \times \mathbb{C}^n \times \mathbb{C}^{N_{n',n,\ell_0}}$. It then follows from standard arguments which are easy modifications of the original phenomenon discovered in [28] that h extends holomorphically to a neighborhood of q_0 in $\mathbb{C}^n$, or equivalently that h is real analytic in a neighborhood of q_0 in M.

The positive radius ρ_3 could have been shrunk from the beginning to be arbitrarily small, and the same reasoning provides a point q_0, arbitrarily close to p_0, at which h is real analytic.

The proof of Lemma 2.11 is complete. □

§5. Description of the proof of Theorem 2.9

5.1. Summary and statement of Main Proposition 5.2. Let ρ_1 be as in Definition 2.2, let ρ_2 be as in the assumptions of Theorem 2.9 and let ρ_3 be as in §3 above. By hypothesis, there exists at least one point $q_0 \in \mathscr{O}_{CR}(M, p_0) \cap \Delta_n(\rho_3)$ at which h is real analytic (it will not be necessary to deal with such points which are closer to p_0).

By assumption, the components $h_{i'}(t)$ extend holomorphically to the complete wedge $\mathscr{W}_2$ in $\Delta_n(\rho_2)$ with edge $M \cap \Delta_n(\rho_2)$. Define a complete wedge $\mathscr{W}_3$ in $\Delta_n(\rho_3)$ with edge $M \cap \Delta_n(\rho_3)$ as the intersection of $\mathscr{W}_2$ with $\Delta_n(\rho_3)$. Here is an illustration, where $\mathscr{W}_3$ is on the top and its symmetric $\widetilde{W}_3$ (to be introduced later) is on the bottom:

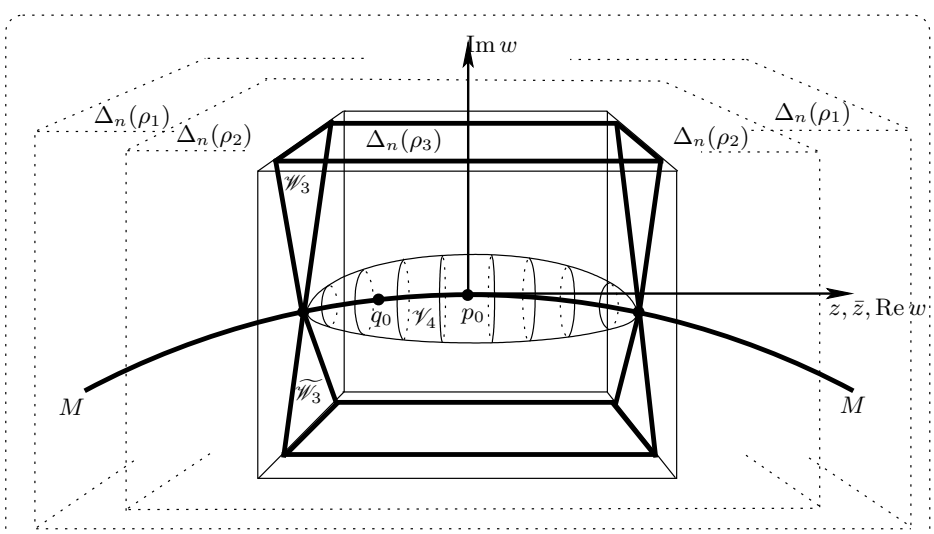

FIGURE 1: HOLOMORPHIC EXTENSION TO A NEIGHBORHOOD OF $M \cap \Delta_n(\rho_3)$

In these conditions, the components $h_{i'}(t)$ of h extend holomorphically to $\mathscr{W}_3$. Also, the jet $J_{\bar t}^{\ell_0}\overline{h(t)}$ in the arguments of the functions $H_{i',I'}$ in (3.10) extends antiholomorphically to $\mathscr{W}_3$.

It is now time to state an independent general proposition, where M' disapears, where each component $h_{i'}$ is replaced by a $\mathscr{C}^\infty$-smooth CR function a, not necessarily coming from a CR mapping, where the jet $J_{\bar t}^{\ell_0}\overline{h(t)}$ is replaced by an independent vector valued mapping $\overline{b}$ which extends antiholomorphically to $\mathscr{W}_3$, For similar statements, *see* [30], [31], [8], [9], [8], [25], [7], [26].

Main Proposition 5.2. As above, let M be a real analytic local generic submanifold defined as a graph in $\Delta_n(\rho_1)$ by (2.4), let ρ_3 with $0 < \rho_3 < \rho_1$ and let $\mathscr{W}_3$ be a complete wedge in $\Delta_n(\rho_3)$ with edge $M \cap \Delta_n(\rho_3)$. Let $a(t)$ be a $\mathscr{C}^\infty$-smooth CR function defined over $M \cap \Delta_n(\rho_3)$ which extends holomorphically to the complete wedge $\mathscr{W}_3$ and which is real analytic in a neighborhood of at least one point $q_0 \in \mathscr{O}_{CR}(M, p_0) \cap \Delta_n(\rho_3)$. Let $\nu \in \mathbb{N}$, let $\varepsilon > 0$ and let $b(t)$ be a $\mathbb{C}^\nu$-valued $\mathscr{C}^\infty$-smooth CR mapping defined on $M \cap \Delta_n(\rho_3)$ which satisfies $|b(t) - b(0)| < \varepsilon$ for all $t \in M \cap \Delta_n(\rho_3)$, which extends holomorphically to $\mathscr{W}_3$ and which is real analytic in a neighborhood of the same point $q_0 \in \mathscr{O}_{CR}(M, p_0) \cap \Delta_n(\rho_3)$. Let $N \in \mathbb{N}$ with $N \geq 1$, and for $\ell = 0, 1, \ldots, N$, let $H_\ell = H_\ell\left(z, \bar t, \bar b\right)$ be some functions which are holomorphic for $|z| < \rho_3$, for $|\bar t| < \rho_3$ and for $|\bar b - \overline{b(0)}| < \varepsilon$. Assume that $a(t)$ satisfies the (not necessarily monic) polynomial equation

$$\sum_{0 \leq \ell \leq N} H_\ell\left(z, \bar t, \overline{b(t)}\right)\, a(t)^{N-\ell} = 0, \tag{5.3}$$

for all $t \in M \cap \Delta_n(\rho_3)$ and that the $\mathscr{C}^\infty$-smooth functions $H_\ell\left(z, \bar t, \overline{b(t)}\right)$ are not all identically zero. Then there exists an open neighborhood $\mathscr{V}_4$ of $\mathscr{O}_{CR}(M, p_0) \cap \Delta_n(\rho_3)$ in $\mathbb{C}^n$ to which $a(t)$ extends holomorphically.

This proposition, applied to each $h_{i'}$, completes the proof of Theorem 2.9. The remainder of this section is devoted to describe its proof, intuitively speaking.

5.4. Heuristic. Although the equations (3.10) (of a form similar to (5.3)) were obtained by applying the $(0, 1)$ vector fields tangent to M, it will be crucial to reapply the vector fields $\overline{L}_k$ to (5.3).

But before applying the $\overline{L}_k$, it is also crucial to assume that N is the smallest possible integer with the property that there exists a relation of the form (5.3) on $M \cap \Delta_n(\rho_3)$. This assumption is of course free. Since $a(t)$ is CR, it may be considered as a constant by the derivations $\overline{L}_k$. Suppose for a while that dividing by $H_0\left(z, \bar t, \overline{b(t)}\right)$ is allowed in some sense. Then

rewrite (5.3) as follows:

$$a(t)^N + \sum_{1\leq \ell\leq N} \frac{H_\ell\left(z,\bar{t},\overline{b(t)}\right)}{H_0\left(z,\bar{t},\overline{b(t)}\right)}\, a(t)^{N-\ell} = 0. \tag{5.5}$$

Applying now the derivations $\overline{L}_k$, the term $\overline{L}_k\left[a(t)^N\right]$ vanishes (crucial fact), which yields the identities

$$\sum_{1\leq \ell\leq N} \frac{H_0\left(z,\bar{t},\overline{b(t)}\right)\,\overline{L}_k\left[H_\ell\left(z,\bar{t},\overline{b(t)}\right)\right] - H_\ell\left(z,\bar{t},\overline{b(t)}\right)\,\overline{L}_k\left[H_0\left(z,\bar{t},\overline{b(t)}\right)\right]}{\left[H_0\left(z,\bar{t},\overline{b(t)}\right)\right]^2}\, a(t)^{N-\ell} = 0, \tag{5.6}$$

for $k = 1,\dots,m$. Now, after chasing the unnecessary denominator, observe that since the coefficients of the $\overline{L}_k$ are holomorphic in $(z,\bar{t})$, there exist new holomorphic functions $H_{1,\ell}$, $1\leq \ell\leq N$, such that the identity (5.6) may be rewritten as

$$\sum_{1\leq \ell\leq N} H_{1,\ell}\left(z,\bar{t},\overline{b_1(t)}\right)\, a(t)^{N-\ell} = 0, \tag{5.7}$$

where of course

$$\overline{b_1(t)} := J^1_{\bar{t}}\overline{b(t)} = \left(\partial_{\bar{t}_i}\overline{b_j(t)}\right)_{1\leq i\leq n,\, 1\leq j\leq \nu}. \tag{5.8}$$

Setting $\nu_1 := \nu(n+1)$, the relation (5.7) is totally similar to (5.3), if some freedom is allowed about the number of functions $\overline{b}_j$. However, the degree $N-1$ of the relation (5.7) is strictly less than the degree N of the relation (5.3). *Because the degree N was chosen to be the smallest possible one, this relation* (5.7) *has to be trivial*.

Equivalently:

$$\overline{L}_k\left(\frac{H_\ell\left(z,\bar{t},\overline{b(t)}\right)}{H_0\left(z,\bar{t},\overline{b(t)}\right)}\right) \equiv 0, \tag{5.9}$$

over $M\cap\Delta_n(\rho_3)$, for $k=1,\dots,m$ and $\ell=1,\dots,N$. In other words, the quotient H_ℓ/H_0 (which has to be defined carefully in some sense) is CR on $M\cap\Delta_n(\rho_3)$. Informally speaking, such an identity should be exceptional, because the term $\overline{b(t)}$ is anti-CR. In fact, one may expect intuitively that if the relation (5.9) is satisfied, then there are no terms $\overline{b(t)}$ at all, and hence the quotient H_ℓ/H_0 extends meromorphically (but not holomorphically, because of the presence of a quotient) to a neighborhood $\mathscr{V}_3$ of $\mathscr{O}_{CR}(M,p_0)\cap\Delta_n(\rho_3)$ in $\mathbb{C}^n$. This is true and will be proved below in Main Lemma 7.1 formulated below, where the assumption that $a(t)$ and $b(t)$ are already real analytic in a neighborhood of the point $q_0\in\mathscr{O}_{CR}(M,p_0)\cap\Delta_n(\rho_3)$ is used.

According to the works of K. Oka and E.E. Levi, a meromorphic function defined in a domain of $\mathbb{C}^n$ is always the global quotient of two holomorphic

functions (*see* [18] for instance). It follows that there exist functions $R_\ell = R_\ell(t)$ holomorphic in $\mathscr{V}_3$ such that

$$\frac{H_\ell\left(z,\bar{t},\overline{b(t)}\right)}{H_0\left(z,\bar{t},\overline{b(t)}\right)} \equiv \frac{R_\ell(t)}{R_0(t)}, \tag{5.10}$$

for all $t \in \mathscr{V}_3$. Replacing then (5.10) in (5.5) and chasing the denominator:

$$R_0(t)\,a(t)^N + \sum_{1\leq \ell \leq N} R_\ell(t)\,a(t)^{N-\ell} = 0, \tag{5.11}$$

for all $t \in \mathscr{V}_3$. Here, the function $R_0(t)$ is not identically zero. Finally, by reproducing Section 3.3 of [8] or Proposition 6.4 of [25] (*see* also [27]), it follows that $a(t)$ is real analytic at every point of $\mathscr{O}_{CR}(M,p_0) \cap \Delta_n(\rho_3)$, hence (thanks to the Severi-Tomassini theorem) it extends holomorphically to an open neighborhood $\mathscr{V}_4 \subset \mathscr{V}_3$ of $\mathscr{O}_{CR}(M,p_0) \cap \Delta_n(\rho_3)$ in $\mathbb{C}^n$.

Sections 6, 7,8,9 and 10 are devoted to complete rigorously all the details of this strategy of proof.

§6. Rings of CR functions and their fields of fractions

Inspired by the preceding discussion, introduce the set $\mathscr{H}(M,\rho_3,\varepsilon)$ of functions of the form $H\left(z,\bar{t},\overline{b(t)}\right)$, where $\nu \in \mathbb{N}$, where $b(t)$ is a $\mathbb{C}^\nu$-valued $\mathscr{C}^\infty$-smooth CR mapping defined on $M \cap \Delta_n(\rho_3)$ which extends holomorphically to $\mathscr{W}_3$ and which is real analytic at the point $q_0 \in \mathscr{O}_{CR}(M,p_0) \cap \Delta_n(\rho_3)$ and where $H = H\left(z,\bar{t},\bar{b}\right)$ is holomorphic for $|z| < \rho_3$, $|\bar{t}| < \rho_3$ and for $\left|\bar{b} - \overline{b(0)}\right| < \varepsilon$ and where $\left|\overline{b(t)} - \overline{b(0)}\right| < \varepsilon$ for all $t \in M \cap \Delta_n(\rho_3)$. The main feature of $\mathscr{H}(M,\rho_3,\varepsilon)$ is the following.

Lemma 6.1. *Every function $H\left(z,\bar{t},\overline{b(t)}\right) \in \mathscr{H}(M,\rho_3,\varepsilon)$ admits a real analytic extension to $\mathscr{W}_3$ which is antiholomorphic with respect to the complex transversal coordinates $w = (w_1,\ldots,w_d) \in \mathbb{C}^d$.*

Proof. Indeed, $\overline{b(t)}$ admits an antiholomorphic extension to $\mathscr{W}_3$ by assumption, the function $H\left(z,\bar{t},\overline{b(t)}\right)$ is holomorphic with respect to its variables, but it also depends on the holomorphic variables $z = (z_1,\ldots,z_m)$ in general. Consequently, the antiholomorphicity with respect to z (only) is lost. □

Lemma 6.2. *The set $\mathscr{H}(M,\rho_3,\varepsilon)$ is an* entire *ring which is stable under differentiation by the $(0,1)$ vector fields tangent to M:*

$$\overline{L}_k\,\mathscr{H}(M,\rho_3,\varepsilon) \subset \mathscr{H}(M,\rho_3,\varepsilon), \qquad k = 1,\ldots,m. \tag{6.3}$$

Proof. The set $\mathscr{H}(M,\rho_3,\varepsilon)$ is obviously stable under addition and multiplication. Suppose that there exist two elements H_1, H_2 such that

$$H_1\left(z,\bar{t},\overline{b_1(t)}\right) \cdot H_2\left(z,\bar{t},\overline{b_2(t)}\right) = 0, \tag{6.4}$$

for all $t \in M \cap \Delta_n(\rho_3)$. Then there exists a nonempty open subset V of $M \cap \Delta_n(\rho_3)$ on which $H_1(z, \bar{t}, \overline{b_1(t)})$ or $H_2\left(z, \bar{t}, \overline{b_2(t)}\right)$ – say $H_1\left(z, \bar{t}, \overline{b_1(t)}\right)$ to fix ideas – vanishes identically. One must show that that $H_1\left(z, \bar{t}, \overline{b(t)}\right)$ vanishes identically on $M \cap \Delta_n(\rho_3)$.

According to Lemma 6.1, the function $H_1\left(z, \bar{t}, \overline{b_1(t)}\right)$ extends real analytically and antiholomorphically with respect to w into the wedge $\mathscr{W}_3$. By the principle of analytic continuation (for real analytic functions), it suffices to show that $H_1\left(z, \bar{t}, \overline{b_1(t)}\right)$ vanishes identically on a nonempty open subset of $\mathscr{W}_3$.

Let $p \in V$ and let $\mathscr{V}_p$ be an open polydisc centered at p with $\mathscr{V}_p \cap M \subset V$. For $q = (z_q, w_q) \in \mathscr{V}_p$, the intersection $M \cap \{z = z_q\} \cap \mathscr{V}_p$ is maximally real in the slice $\{z = z_q\} \cap \mathscr{V}_p$. Also, the function $H_1\left(z, \bar{t}, \overline{b_1(t)}\right)$ extends antiholomorphically with respect to w into the sliced wedge $\mathscr{W}_3 \cap \{z = z_q\} \cap \mathscr{V}_p$. By the generic uniqueness principle (for antiholomorphic functions), it follows that $H_1\left(z, \bar{t}, \overline{b_1(t)}\right)$ vanishes identically in the sliced wedge $\mathscr{W}_3 \cap \{z = z_q\} \cap \mathscr{V}_p$. Since z_q was arbitrary, it follows that $H_1\left(z, \bar{t}, \overline{b_1(t)}\right)$ vanishes identically in the nonempty open subset $\mathscr{W}_3 \cap \mathscr{V}_p$ of $\mathscr{W}_3$, as desired.

Finally, since the coefficients of the vector fields $\overline{L}_k$ are holomorphic for $|z| < \rho_1$ and $|\bar{t}| < \rho_1$, the second property follows from the chain rule. The proof of Lemma 6.2 is complete. □

A slightly more precise result has in fact been established.

Corollary 6.5. *The zero-set of a nonzero function* $H\left(z, \bar{t}, \overline{b(t)}\right)$ *in* $\mathscr{H}(M, \rho_3, \varepsilon)$ *is a closed subset of* $M \cap \Delta_n(\rho_3)$ *with empty interior.* □

In the sequel, denote by $\mathscr{Z}_H$ the zero set of $H\left(z, \bar{t}, \overline{b(t)}\right)$ on $M \cap \Delta_n(\rho_3)$. Since the ring $\mathscr{H}(M, \rho_3, \varepsilon)$ is entire, it is allowed to consider its *field of fractions* $\mathscr{R}(M, \rho_3, \varepsilon)$ which consists formally of quotients of the form

$$\frac{H_1\left(z, \bar{t}, \overline{b_1(t)}\right)}{H_2\left(z, \bar{t}, \overline{b_2(t)}\right)}, \tag{6.6}$$

and which may be viewed as a standard complex-valued function on the dense open subset $(M \cap \Delta_n(\rho_3)) \setminus \mathscr{Z}_{H_2}$.

6.7. Two notions of algebraic dependence. Since $\mathscr{R}(M, \rho_3, \varepsilon)$ is a field, the notion of algebraic dependence makes sense. Precisely, a $\mathscr{C}^\infty$-smooth CR function $a(t)$ which is defined on $M \cap \Delta_n(\rho_3)$ is called *algebraic over*

$\mathscr{R}(M, \rho_3, \varepsilon)$ if there exists a nonzero polynomial

$$\sum_{0 \leq \ell \leq N} \frac{H_{1,\ell}\left(z, \bar{t}, \overline{b_{1,\ell}(t)}\right)}{H_{2,\ell}\left(z, \bar{t}, \overline{b_{2,\ell}(t)}\right)} X^{N-\ell}, \tag{6.8}$$

with coefficients in $\mathscr{R}(M, \rho_3, \varepsilon)$ which annihilates $a(t)$, *i.e.* such that

$$\sum_{0 \leq \ell \leq N} \frac{H_{1,\ell}\left(z, \bar{t}, \overline{b_{1,\ell}(t)}\right)}{H_{2,\ell}\left(z, \bar{t}, \overline{b_{2,\ell}(t)}\right)} a(t)^{N-\ell} = 0, \tag{6.9}$$

for all $t \in (M \cap \Delta_n(\rho_3)) \setminus \bigcup_{0 \leq \ell \leq N} \mathscr{Z}_{H_{2,\ell}}$.

Equivalently, after chasing the denominators, the $\mathscr{C}^\infty$-smooth CR function $a(t)$ is algebraically dependent over the ring $\mathscr{H}(M, \rho_3, \varepsilon)$.

Another notion of algebraic dependence is the following. Let $\mathrm{Mer}(\mathscr{O}_{CR}(M, p_0), \rho_3)$ denote the field of functions which are meromorphic in some connected open neighborhood of $\mathscr{O}_{CR}(M, p_0) \cap \Delta_n(\rho_3)$ in $\mathbb{C}^n$. In this field, the classical algebraic operations are defined up to some shrinking of the domains of definition. Then a $\mathscr{C}^\infty$-smooth CR function $a(t)$ defined on $M \cap \Delta_n(\rho_3)$ is called *algebraic over* $\mathrm{Mer}(\mathscr{O}_{CR}(M, p_0), \rho_3)$ if there exists a nonzero polynomial

$$\sum_{0 \leq \ell \leq N} R_\ell(t)\, X^{N-\ell}, \tag{6.10}$$

with coefficients $R_\ell(t) \in \mathrm{Mer}(\mathscr{O}_{CR}(M, p_0), \rho_3)$ which annihilates $a(t)$, *i.e.* such that

$$\sum_{0 \leq \ell \leq N} R_\ell(t)\, a(t)^{N-\ell} = 0, \tag{6.11}$$

for all t in some neighborhood $\mathscr{V}_3$ of $\mathscr{O}_{CR}(M, p_0) \cap \Delta_n(\rho_3)$ in $\mathbb{C}^n$, outside the union of the polar sets of the $R_\ell(t)$.

It is now time to reformulate and to slightly generalize the heuristic discussion of §5.4. In the following lemma, a Main Lemma 7.1 (to be formulated and to be proved later), is hidden.

Lemma 6.12. *Let $a(t)$ be a $\mathscr{C}^\infty$-smooth CR function on $M \cap \Delta_n(\rho_3)$ which extends holomorphically to the complete wedge $\mathscr{W}_3$ in $\Delta_n(\rho_3)$ with edge $M \cap \Delta_n(\rho_3)$. Assume that $a(t)$ is real analytic at one point $q_0 \in \mathscr{O}_{CR}(M, p_0) \cap \Delta_n(\rho_3)$. If the function $a(t)$ is algebraic over the field $\mathscr{R}(M, \rho_3, \varepsilon)$ (or equivalently over the ring $\mathscr{H}(M, \rho_3, \varepsilon)$), then it is algebraic over the field $\mathrm{Mer}(\mathscr{O}_{CR}(M, p_0), \rho_3)$.*

Proof. Without loss of generality, assume that $a(t)$ satisfies a polynomial relation

$$\sum_{0 \leq \ell \leq N} H_\ell\left(z, \bar{t}, \overline{b(t)}\right)\, a(t)^{N-\ell} = 0, \tag{6.13}$$

for all $t \in M \cap \Delta_n(\rho_3)$, *whose degree* $N \geq 1$ *is the smallest possible*. Hence $H_0\left(z, \bar{t}, \overline{b(t)}\right)$ does not vanish identically. Proceeding exactly as in the heuristic discussion of §5.4, divide by $H_0\left(z, \bar{t}, \overline{b(t)}\right)$, which yields

$$a(t)^N + \sum_{1 \leq \ell \leq N} \frac{H_\ell\left(z, \bar{t}, \overline{b(t)}\right)}{H_0\left(z, \bar{t}, \overline{b(t)}\right)} a(t)^{N-\ell} = 0. \tag{6.14}$$

Apply now the derivations $\overline{L}_k$, which yields

$$\sum_{1 \leq \ell \leq N} \frac{H_0\left(z, \bar{t}, \overline{b(t)}\right) \overline{L}_k\left[H_\ell\left(z, \bar{t}, \overline{b(t)}\right)\right] - H_\ell\left(z, \bar{t}, \overline{b(t)}\right) \overline{L}_k\left[H_0\left(z, \bar{t}, \overline{b(t)}\right)\right]}{\left[H_0\left(z, \bar{t}, \overline{b(t)}\right)\right]^2} a(t)^{N-\ell} = 0. \tag{6.15}$$

Now, after chasing the unnecessary denominator, and using (6.3), rewrite this identity under the form

$$\sum_{1 \leq \ell \leq N} H_{1,\ell}\left(z, \bar{t}, \overline{b_1(t)}\right) a(t)^{N-\ell} = 0, \tag{6.16}$$

where $H_{1,\ell}\left(z, \bar{t}, \overline{b_1(t)}\right)$ belongs to $\mathscr{H}(M, \rho_3, \varepsilon)$. Thus a relation which is totally similar to (10.1.47), but which is of degree strictly less than N, has been constructed. Because the degree N was chosen to be the smallest possible one, this relation has to be trivial. Consequently, the $(0,1)$ vector fields $\overline{L}_k$ annihilate the quotients H_ℓ/H_0 outside the zero-set $\mathscr{Z}_{H_0}$. By Main Lemma 7.1 (to be discussed later), this implies that for each $\ell = 1, \ldots, N$, the quotient H_ℓ/H_0 coincides in some neighborhood $\mathscr{V}_3$ of $\mathscr{O}_{CR}(M, p_0) \cap \Delta_n(\rho_3)$ in $\mathbb{C}^n$ with the restriction to $[\mathscr{O}_{CR}(M, p_0) \cap \Delta_n(\rho_3)] \backslash \mathscr{Z}_{H_0}$ of a meromorphic function $R_\ell(t)/R_0(t)$. Finally, replacing H_ℓ/H_0 by $R_\ell/R_0(t)$ in the original relation (6.13), it follows that $a(t)$ is algebraic over $\mathrm{Mer}(\mathscr{O}_{CR}(M, p_0), \rho_3)$. The proof of Lemma 6.12 is complete. □

Thanks to this Lemma 6.12, the proof of Main Proposition 5.2 is complete, as explained after (5.11). □

§7. Statement of Main Lemma 7.1

In sum, everything relies upon a statement, interesting in itself, which is reformulated carefully, including all the assumptions.

Main Lemma 7.1. As in Main Proposition 5.2, let M be a real analytic local generic submanifold defined in $\Delta_n(\rho_1)$, as in Definition 2.2 **(I)**. Let ρ_3 with $0 < \rho_3 < \rho_2 < \rho_1$ and let $\mathscr{W}_3$ be a complete wedge in $\Delta_n(\rho_3)$ with edge $M \cap \Delta_n(\rho_3)$. Let $\nu_1, \nu_2 \in \mathbb{N}$, let $\varepsilon > 0$ and let $b_1(t), b_2(t)$ be two $\mathbb{C}^{\nu_1}$- and $\mathbb{C}^{\nu_2}$-valued $\mathscr{C}^\infty$-smooth CR mappings defined on $M \cap \Delta_n(\rho_3)$ which satisfy $|b_1(t) - b_1(0)| < \varepsilon$, $|b_2(t) - b_2(0)| < \varepsilon$, which extend both holomorphically to $\mathscr{W}_3$ and which are real analytic in a neighborhood of the

same point $q_0 \in \mathscr{O}_{CR}(M, p_0) \cap \Delta_n(\rho_3)$. Let $H_1(z, \bar{t}, \overline{b}_1)$ and $H_2\left(z, \bar{t}, \overline{b}_2\right)$ be two holomorphic functions defined for $|z| < \rho_3$, for $|\bar{t}| < \rho_3$ and for $\left|\overline{b}_1 - \overline{b_1(0)}\right| < \varepsilon$, $\left|\overline{b}_2 - \overline{b_2(0)}\right| < \varepsilon$. Assume that $H_2\left(z, \bar{t}, \overline{b_2(t)}\right)$ does not vanish identically on $M \cap \Delta_n(\rho_3)$ and consider the quotient

$$\frac{H_1\left(z, \bar{t}, \overline{b_1(t)}\right)}{H_2\left(z, \bar{t}, \overline{b_2(t)}\right)}, \tag{7.2}$$

which belongs to $\mathscr{R}(M, \rho_3, \varepsilon)$ and remind that by Corollary 6.5, the zero-set $\mathscr{Z}_{H_2}$ of $H_2\left(z, \bar{t}, \overline{b_2(t)}\right)$ is a closed subset of $M \cap \Delta_n(\rho_3)$ with empty interior. Then the following three conditions are equivalent:

(1) there exists a meromorphic function in $\mathrm{Mer}(\mathscr{O}_{CR}(M, p_0), \rho_3)$ of the form $P_1(t)/P_2(t)$, where $P_1(t)$ and $P_2(t)$ are holomorphic functions defined in some open connected neighborhood $\mathscr{V}_3$ of $\mathscr{O}_{CR}(M, p_0) \cap \Delta_n(\rho_3)$ in $\mathbb{C}^n$ with $P_2(t) \not\equiv 0$ such that

$$\frac{H_1\left(z, \bar{t}, \overline{b_1(t)}\right)}{H_2\left(z, \bar{t}, \overline{b_2(t)}\right)} = \frac{P_1(t)}{P_2(t)}, \tag{7.3}$$

for all $t \in \mathscr{V}_3 \cap M$ outside the zero set of H_2;

(2) the quotient H_1/H_2 is CR over the dense open subset $(M \cap \Delta_n(\rho_3)) \backslash \mathscr{Z}_{H_2}$;

(3) There exists a nonempty open subset V of the dense open subset $(M \cap \Delta_n(\rho_3)) \backslash \mathscr{Z}_{H_2}$ on which the quotient H_1/H_2 is CR.

Proof. Obviously, **(2)** $\Rightarrow$ **(3)**. Treat first the two implications **(1)** $\Rightarrow$ **(2)** and **(3)** $\Rightarrow$ **(2)**, which are easy. Indeed, by Lemma 6.1, for $k = 1, \ldots, m$, the CR derivatived functions $\overline{L}_k(H_1/H_2)$ also belong to $\mathscr{R}(M, \rho_3, \varepsilon)$. If **(1)** or **(3)** holds, then H_1/H_2 is CR on a nonempty open subset V of $(M \cap \Delta_n(\rho_3)) \backslash \mathscr{Z}_{H_2}$, so Corollary 6.5 implies that $\overline{L}_k(H_1/H_2)$ vanishes identically on $M \cap \Delta_n(\rho_3) \backslash \mathscr{Z}_{H_2}$, which yields **(2)**.

Next, begin the proof of the implication **(2)** $\Rightarrow$ **(1)**, which is by far the main task. Even if it is already known that **(2)** and **(3)** are equivalent, property **(1)** will be established assuming only that H_1/H_2 is CR over a nonempty open subset V, as in **(3)**.

Define the Schwarz reflection across M which stabilizes the slices $\{(z, w) \in \Delta_n(\rho_1) : \ z = ct.\}$ explicitely by

$$s : (z, w) \mapsto \left(z, \overline{\Theta}(z, \bar{z}, \bar{w})\right). \tag{7.4}$$

Shrinking ρ_3 a bit if necessary, one can construct a slightly smaller complete wedge $\widetilde{\mathscr{W}_3}$ which is contained in $s(\mathscr{W}_3)$, as depicted in FIGURE 1 above. What is important is that $\mathscr{W}_3$ and $\widetilde{\mathscr{W}_3}$ are directed by two opposite vectors at every point of $M \cap \Delta_n(\rho_3)$, because a version of the edge of the wedge theorem will be applied in the end of the proof.

Since s is antiholomorphic with respect to w and since $H_1\left(z,\bar{t},\overline{b_1(t)}\right)$ and $H_2\left(z,\bar{t},\overline{b_2(t)}\right)$ extend as real analytic functions in $\mathscr{W}_3$ which are antiholomorphic with respect to w, it follows by composition with the reflection $s(z,w)$ that H_1 and H_2 extend to be real analytic in $\widetilde{\mathscr{W}_3}$ and holomorphic with respect to w. Denote by $\widetilde{H}_1(t,\bar{t})$ and $\widetilde{H}_2(t,\bar{t})$ these two real analytic extensions. Since the antiholomorphic reflection coincides with the identity mapping on $M\cap\Delta_n(\rho_3)$, the $\mathscr{C}^\infty$ boundary values of the real analytic extensions $\widetilde{H}_1$, $\widetilde{H}_2$ are just H_1 and H_2.

Since $\widetilde{H}_1/\widetilde{H}_2$ is CR on the nonempty open subset V of $(M\cap\Delta_n(\rho_3))\backslash\mathscr{Z}_2$, and since it is holomorphic with respect to the variable w in the vertical conelike slices $\{(z,w)\in\Delta_n(\rho_1):\ z=ct.\}\cap\widetilde{\mathscr{W}_3}$, it follows from an elementary (and known) separate Cauchy-Riemann principle that there exists a neighborhood $\mathscr{V}$ of V in $\mathbb{C}^n$ such that $\widetilde{H}_1/\widetilde{H}_2$ extends holomorphically to $\mathscr{V}\cap\widetilde{\mathscr{W}_3}$. Apply now the following general lemma to deduce that $\widetilde{H}_1/\widetilde{H}_2$ can be represented as a quotient P_1/P_2, where P_1 and $P_2\neq 0$ are holomorphic in $\widetilde{\mathscr{W}_3}$.

Lemma 7.5. *Let $\Omega\subset\mathbb{C}^n$ be a domain, let A_1 and $A_2\neq 0$ be two real analytic functions in Ω. Suppose that there exist a point $p\in\Omega\backslash\mathscr{Z}_{A_2}$ and a nonempty open neighborhood V_p of p contained in $\Omega\backslash\mathscr{Z}_{A_2}$ such that the restriction to V_p of A_1/A_2 is holomorphic in V_p. Then there exist two holomorphic functions P_1 and $P_2\neq 0$ in Ω such that*

$$\left.\frac{P_1}{P_2}\right|_{\Omega\backslash\mathscr{Z}_{A_2}}=\left.\frac{A_1}{A_2}\right|_{\Omega\backslash\mathscr{Z}_{A_2}}. \tag{7.6}$$

Proof. In this proof (only), denote some complex coordinates on $\mathbb{C}^n$ by $z=(z_1,\dots,z_n)$ and $z=x+iy$. By assumption, for $i=1,\dots,n$ and for $z=x+iy\in V_p$, it holds that

$$\frac{\partial}{\partial\bar{z}_i}\left(\frac{A_1(x,y)}{A_2(x,y)}\right)\equiv 0, \tag{7.7}$$

which yields by analytic continuation:

$$A_2(x,y)\,\frac{\partial A_1}{\partial\bar{z}_i}(x,y)-A_1(x,y)\,\frac{\partial A_2}{\partial\bar{z}_i}(x,y)\equiv 0, \tag{7.8}$$

for all $z\in\Omega$. It follows that the quotient A_1/A_2 is holomorphic on $\Omega\backslash\mathscr{Z}_{A_2}$, even if $\Omega\backslash\mathscr{Z}_{A_2}$ is not (locally) connected. In fact, to achieve the proof, the local connectedness of $\Omega\backslash\mathscr{Z}_{A_2}$ is needed. To fix this point, it is sufficient to show that $\mathscr{Z}_{A_2}$ is in fact of real dimension $\leq 2n-2$, hence in particular $\Omega\backslash\mathscr{Z}_{A_2}$ is locally connected.

Indeed, proceeding by contradiction, in a neighborhood of a point $q\in\mathscr{Z}_{A_2}$ at which $\mathscr{Z}_{A_2}$ is geometrically smooth and of dimension $2n-1$, make

a translation of coordinates so that q is the origin and $\mathscr{Z}_{A_2}$ is locally represented by $\{x_1 = 0\}$. Then write

$$A_2(x,y) = (x_1)^\kappa [A_{2,0}(x_2, \cdots, x_n, y_1, \ldots, y_n) + x_1\, A_{2,1}(x,y)], \tag{7.9}$$

for some integer $\kappa \geq 1$ and some real analytic function $A_{2,0}$ independent of x_1 which is not identically zero. Without loss of generality, assume that $A_1(x,y) \not\equiv 0$, hence

$$A_1(x,y) = (x_1)^\lambda [A_{1,0}(x_2, \cdots, x_n, y_1, \ldots, y_n) + x_1\, A_{1,1}(x,y)], \tag{7.10}$$

for some integer $\lambda \geq 0$, where the function $A_{1,0}$ is also not identically zero. Since by assumption $q \in \mathscr{Z}_{A_2}$, it holds that $\kappa \geq \lambda + 1$. Compute then (7.8) for $i = 1$, which yields

$$0 \equiv \left(\frac{\lambda - \kappa}{2}\right) x_1^{\kappa+\lambda-1} [A_{1,0}\, A_{2,0} + \mathrm{O}(x_1)], \tag{7.11}$$

a contradiction.

Thus A_1/A_2 extends holomorphically to the *locally connected* open set $\Omega \backslash \mathscr{Z}_{A_2}$.

To pursue the proof, choose an arbitrary point $q \in \Omega$, center the coordinates z at q and consider the polydisc $\Delta_n(\rho_q) \subset \Omega$, where $\rho_q = \inf_{r \in \partial\Omega} |r - q|$. Then $A_1(x,y)$ and $A_2(x,y)$ may be developed in power series with respect to x and y with radius of convergence at least equal to ρ_q. After perhaps making a unitary transformation, assume that the maximally real submanifold $[\mathbb{R}^n \times \{0\}] \cap \Delta_n(\rho_q)$ is not contained in $\mathscr{Z}_{A_2}$. Then complexify the variable $x \in \mathbb{R}^n$ to be the complex variable $z \in \mathbb{C}^n$ and introduce the element of meromorphic function

$$R_q(z) := \frac{A_1(z,0)}{A_2(z,0)}, \tag{7.12}$$

which is defined in $\Delta_n(\rho_q)$. By construction, the restrictions to the maximally real subspace

$$[(\mathbb{R}^n \times \{0\}) \cap \Delta_n(\rho_q)] \backslash \mathscr{Z}_{A_2} \tag{7.13}$$

of $R_q(z)$ and of $A_1(x,y)/A_2(x,y)$ coincide. Because $\Delta_n(\rho_q) \backslash \mathscr{Z}_{A_2}$ is locally connected, it follows from the principle of analytic continuation that $R_q(z)$ and $A_1(x,y)/A_2(x,y)$ coincide all over $\Delta_n(\rho_q) \backslash \mathscr{Z}_{A_2}$.

In summary, at every point q of Ω, a meromorphic extension of the holomorphic function $A_1(x,y)/A_2(x,y)$ defined in $\Omega \backslash \mathscr{Z}_{A_2}$ has been constructed. It follows from [18] that this meromorphic function can be represented as a quotient of holomorphic functions in Ω, which completes the proof of the lemma. $\square$

7.14. Continuation of the proof. Thus $\widetilde{H_1}/\widetilde{H_2}$ extends meromorphically to $\widetilde{\mathscr{W}_3} \cup \mathscr{V}$. Of course, neither $\mathscr{V}$ nor a neighborhood (in $\mathbb{C}^n$) of the dense subset $(M \cap \Delta_n(\rho_3)) \backslash \mathscr{Z}_{H_2}$ need contain a point of the (thin in the nonminimal case) subset $\mathscr{O}_{CR}(M, p_0) \cap \Delta_n(\rho_3)$.

Here comes the assumption that the CR mappings $b_1(t)$ and $b_2(t)$ extend holomorphically to a neighborhood $\mathscr{V}_{q_0}$ (in $\mathbb{C}^n$) of some point $q_0 \in \mathscr{O}_{CR}(M, p_0) \cap \Delta_n(\rho_3)$. It follows that $H_1\left(z, \bar{t}, \overline{b_1(t)}\right)$ and $H_2\left(z, \bar{t}, \overline{b_2(t)}\right)$ extend real analytically to $\mathscr{V}_{q_0}$. Thanks to the (already established) equivalence between **(2)** and **(3)**, the quotient H_1/H_2 is CR over the dense open subset $(M \cap \Delta_n(\rho_3)) \backslash \mathscr{Z}_{H_2}$. In particular, there exists a point $r_0 \in \mathscr{V}_{q_0}$ in a neighborhood of which H_2 is nonzero. Then, thanks to the Severi-Tomassini extension theorem, H_1/H_2 extends holomorphically to a neighborhood $\mathscr{V}_{r_0}$ (in $\mathbb{C}^n$) of r_0. Applying Lemma 7.5 just above, it follows that H_1/H_2 extends meromorphically to $\mathscr{V}_{q_0}$. Forget the open subset $\mathscr{V}$ and summarize the obtained extension result.

Lemma 7.15. *The CR quotient H_1/H_2 extends meromorphically to $\widetilde{\mathscr{W}_3} \cup \mathscr{V}_{q_0}$.*

The goal, to which the remainder of the paper is devoted, is to prove that H_1/H_2 extends meromorphically to some open neighborhood $\mathscr{V}_3$ of $\mathscr{O}_{CR}(M, p_0) \cap \Delta_n(\rho_3)$ in $\mathbb{C}^n$.

To this aim, define the set D of points $q \in \mathscr{O}_{CR}(M, p_0) \cap \Delta_n(\rho_3)$ such that there exists a small nonempty open polydisc $\mathscr{V}_q$ centered at q and a meromorphic extension $R_q(t)$ of $H_1/H_2|_{(\mathscr{V}_q \cap M) \backslash \mathscr{Z}_{H_2}}$ to $\mathscr{V}_q$. This set is nonempty, since q_0 belongs to D by assumption. It follows from the uniqueness principle on a generic edge that the various meromorphic functions $R_q(t)$ glue together to provide a well defined meromorphic function $R_D(t)$ defined in the open neighborhood $\mathscr{V}_D := \bigcup_{p \in D} \mathscr{V}_q$ of D in $\mathbb{C}^n$. State this property as a step lemma.

Lemma 7.16. *The CR quotient extends meromorphically to $\widetilde{\mathscr{W}_3} \cup \mathscr{V}_D$.*

If $D = \mathscr{O}_{CR}(M, p_0) \cap \Delta_n(\rho_3)$, Main Lemma 7.1 would be proved, almost gratuitously. Suppose therefore that the complement E of D in $\mathscr{O}_{CR}(M, p_0) \cap \Delta_n(\rho_3)$ is nonempty. To conclude the proof of Main Lemma 7.1, it will suffice to derive a contradiction in the following form: establish that there exists in fact *at least one point* $p_1 \in E$ at which H_1/H_2 extends meromorphically.

§8. Localization at a nice boundary point

So, assume that E (the bad set) and D (the good set) are nonempty, with $E \cap D = \emptyset$ and with $E \cup D = \mathscr{O}_{CR}(M, p_0) \cap \Delta_n(\rho_3)$. For technical convenience, it is better to pick a special point $p_1 \in E$ so that E lies behind a real analytic generic "wall" M_1 passing through p_1, as depicted in Figure 2 below (*cf.* [23], [24]).

Lemma 8.1. *There exists a point $p_1 \in E$ and a real analytic hypersurface $M_1 \subset M$ passing through p_1 which is* generic *in $\mathbb{C}^n$ such that $E \backslash \{p_1\}$ lies, near p_1, in one side of M_1.*

Proof. Let $q \in E \neq \emptyset$ be an arbitrary point and let γ be a piecewise real analytic curve running in complex tangential directions to M (CR-curve) which links the point q with the point $q_0 \in D$. Such a curve exists because the CR orbit $\mathscr{O}_{CR}(M, p_0) \cap \Delta_n(\rho_3)$ is locally minimal at every point. After shortening γ and changing the points q and q_0 if necessary, one can assume that γ is a smoothly embedded segment, that q and q_0 belong to γ and are close to each other. Therefore γ can be described as a part of an integral curve of some nonvanishing real analytic section L of T^cM defined in a neighborhood of q.

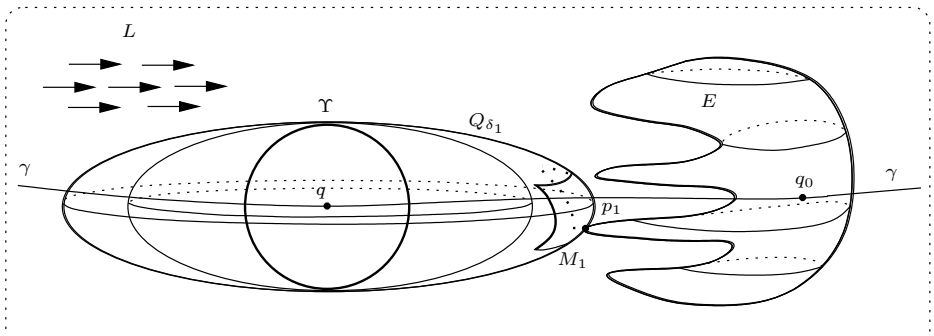

FIGURE 2: CONSTRUCTION OF THE GENERIC WALL BY BLOWING OUT ELLIPSOIDS

Let $H \subset M$ be a small $(2m + d - 1)$-dimensional real analytic hypersurface passing through q such that $L(q)$ is not tangent to H at q. Integrating L with initial conditions in H, one obtains real analytic coordinates $(s_1, s_2) \in \mathbb{R} \times \mathbb{R}^{2m+d-1}$ so that for fixed $s_{2,0}$, the segments $(s_1, s_{2,0})$ are contained in the trajectories of L. After a translation, one may assume that the origin $(0, 0)$ corresponds to a point of γ close to q which is not contained in E, again denoted by q. Fix a small $\varepsilon > 0$ and for real $\delta \geq 1$, define the ellipsoids (*see* FIGURE 2 above)

$$Q_\delta := \{(s_1, s_2) : |s_1|^2/\delta + |s_2|^2 < \varepsilon\}. \tag{8.2}$$

There exists the smallest $\delta_1 > 1$ with $\overline{Q_{\delta_1}} \cap E \neq \emptyset$. Then $\overline{Q_{\delta_1}} \cap E = \partial Q_{\delta_1} \cap E$ and $Q_{\delta_1} \cap E = \emptyset$. Observe that every boundary ∂Q_δ is transverse to the trajectories of L out off the equatorial set $\Upsilon := \{(0, s_2) : |s_2|^2 = \varepsilon\}$ which is contained in D. Hence ∂Q_{δ_1} is transverse to L at every point of $\partial Q_{\delta_1} \cap E$. So $\partial Q_{\delta_1} \setminus \Upsilon$ is generic in $\mathbb{C}^n$, since L is a section of T^cM.

To conclude, it suffices to choose a point $p_1 \in \partial Q_{\delta_1} \cap E$ and to take for M_1 a small real analytic hypersurface passing through p_1 which is tangent to ∂Q_{δ_1} and satisfies $M_1 \setminus \{p_1\} \subset Q_{\delta_1}$. The proof of Lemma 8.1. is complete. $\square$

8.3. Localization. Choose now a point $p_1 \in E$ as in Lemma 10.1 and choose $\varepsilon_1 > 0$ such that the polydisc $\Delta_n(\varepsilon_1)$ (in the new coordinates centered at p_1) with center p_1 is contained in the polydisc $\Delta_n(\rho_3)$ (in the old

coordinates centered at p_0) with center p_0 and localize everything in $\Delta_n(\varepsilon_1)$ (*cf.* FIGURE 3 below, where E has been redrawn on the left).

Denote by M_1^- the negative, left open one-sided neighborhood of M_1 in M such that $E\backslash\{p_1\}$ lies in M_1^- in a neighborhood of p_1, and denote by M_1^+ the other side, which is contained in D by assumption. Choose affine coordinates vanishing at p_1, still denoted by $t = (z, w) = (x+iy, u+iv) \in \mathbb{C}^m \times \mathbb{C}^d$ in order that $T_0M = \{v = 0\}$ and $T_0M_1 = \{v = 0, x_1 = 0\}$. Denote by $z_\sharp \in \mathbb{C}^{m-1}$ the coordinates $(z_2, \dots, z_m)$, which are decomposed in real and imaginary part as $z_\sharp = x_\sharp + iy_\sharp$. Then M is defined by $v_j = \varphi_j(x, y, u)$, $j = 1, \dots, d$ with $\varphi_j(0) = 0$, $d\varphi_j(0) = 0$ and M_1 is defined by a supplementary equation $x_1 = \psi(y_1, x_\sharp, y_\sharp, u)$, with $\psi(0) = 0$, $d\psi(0) = 0$.

After possibly replacing M_1 by a new hypersurface which is contained in $M_1^+ \cup \{p_1\}$ (*cf.* the end of the proof of Lemma 8.1) and after possibly making a dilatation of coordinates, one may assume that the supplementary equation of M_1 is simply given by $x_1 = y_1^2 + |z_\sharp|^2 + |u|^2$, and that M_1^+ is given by

$$M_1^+ : \qquad x_1 > y_1^2 + |z_\sharp|^2 + |u|^2. \tag{8.4}$$

(For the readability of FIGURE 3 below, the curvature of M_1 has been reversed, hence the picture of M_1 is slightly incorrect).

Intersect everything with the polydisc $\Delta_n(\varepsilon_1)$ centered at p_1 In particular, define

$$\widetilde{\mathscr{W}}_{\varepsilon_1} := \widetilde{\mathscr{W}}_3 \cap \Delta_n(\varepsilon_1) \qquad \text{and} \qquad \mathscr{V}_{\varepsilon_1} := \mathscr{V}_D \cap \Delta_n(\varepsilon_1). \tag{8.5}$$

To reach the desired contradiction (*cf.* the last sentence of §7) which achieves the proof of Main Lemma 7.1, the principal goal is now to show that the quotient

$$\frac{H_1\left(z, \bar{t}, \overline{b_1(t)}\right)}{H_2\left(z, \bar{t}, \overline{b_2(t)}\right)}, \tag{8.6}$$

which already extends holomorphically to $\widetilde{W}_{\varepsilon_1} \cup \mathscr{V}_{\varepsilon_1}$ extends holomorphically to a neighborhood of p_1 in $\mathbb{C}^n$. For this purpose, the technique of normal deformations of analytic discs enters the scene ([34], [23], [24]).

§9. CONSTRUCTION OF ANALYTIC DISCS

Let ρ_0 with $0 < \rho_0 \leq \varepsilon_1/4$ and for every ρ with $0 \leq \rho \leq \rho_0$, consider an analytic disc

$$A_\rho(\zeta) = (Z_\rho(\zeta), W_\rho(\zeta)) = (X_\rho(\zeta) + iY_\rho(\zeta), U_\rho(\zeta) + iV_\rho(\zeta)), \tag{9.1}$$

where $Z_\rho(\zeta)$ is given by

$$Z_\rho(\zeta) = (\rho(1-\zeta), 0, \dots, 0). \tag{9.2}$$

The disc A_ρ should be attached to $M \cap \Delta_n(\varepsilon_1)$ and should satisfy $A_\rho(1) = p_1 = 0$ (remind that p_1 is the origin in the chosen coordinates). A necessary

and sufficient condition is that U_ρ satisfies the so-called Bishop functional equation

$$U_\rho(\zeta) = -[T_1(\varphi(X_\rho(\cdot), Y_\rho(\cdot), U_\rho(\cdot)))](\zeta), \tag{9.3}$$

for all $\zeta \in \partial\Delta$. Here, T_1 denotes the harmonic conjugate operator (Hilbert transform on $\partial\Delta$) normalized at $\zeta = 1$, namely satisfying $T_1 u(1) = 0$ for every $u \in \mathscr{C}^\infty(\partial\Delta, \mathbb{R}^d)$. By [2], the solution exists, is unique and yields a family of analytic discs $A_\rho(\zeta)$ which is smooth (and in fact real analytic) with respect to ρ and ζ. Of course, for $\rho = 0$, the disc A_0 is the constant disc which maps $\overline{\Delta}$ to p_1.

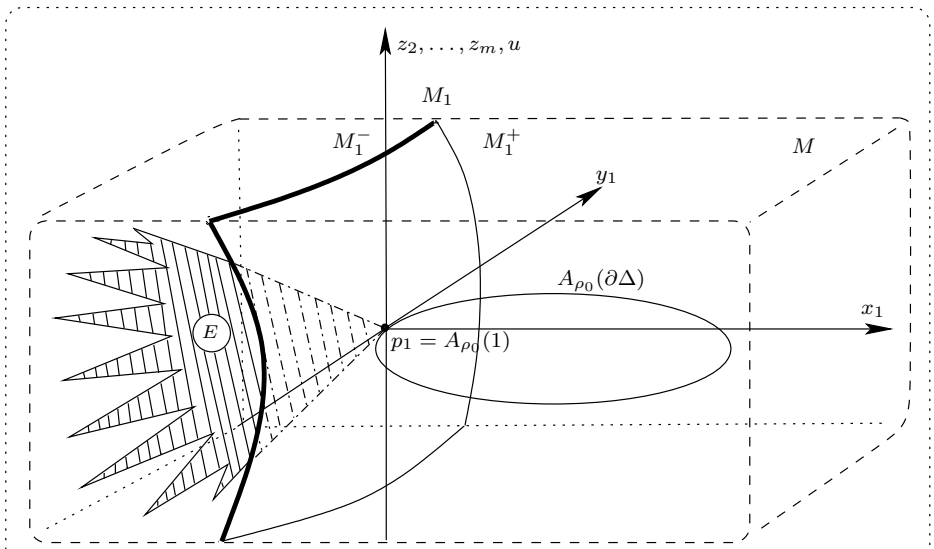

FIGURE 3: RELATIVE DISPOSITION OF E, M_1 AND $A_{\rho_0}(\partial\Delta)$ INSIDE M

The following elementary lemma shows that the boundary $A_{\rho_0}(\partial\Delta)$ of the disc A_{ρ_0} meets the wall M_1 only at p_1, as shown in FIGURE 3 just above. The notion of analytic isotopy is appropriate to apply the continuity principle (*cf.* [23], [24]).

Lemma 9.4. *There exists ρ_0 with $0 < \rho_0 < \varepsilon_1/4$ such that the following two properties are satisfied:*

- **(1)** *for every ρ with $0 < \rho \leq \rho_0$, the mapping $A_\rho : \overline{\Delta} \to \Delta_n(\varepsilon_1)$ is an embedding; moreover, each A_ρ is analytically isotopic to the point p_1;*
- **(2)** *for every ρ with $0 < \rho \leq \rho_0$:*

$$A_\rho(\partial\Delta)\backslash\{1\}) \subset M_1^+. \tag{9.5}$$

Proof. The fact that A_ρ is an embedding for $\rho > 0$ is obvious, since this is the case for Z_ρ. Then the analytic isotopy is obtained by letting ρ decrease to 0. This proves part **(1)**.

For part **(2)**, put $\zeta = re^{i\theta}$, where $|\theta| \leq \pi$ and compute

$$\begin{cases} X_{1,\rho}(\zeta) \;=\; \dfrac{\rho(1-\zeta)+\rho(1-\bar{\zeta})}{2} = \dfrac{\rho}{2}\,\left|1-e^{i\theta}\right|^2, \\ Y_{1,\rho}(\zeta) \;=\; \dfrac{\rho(1-\zeta)-\rho(1-\bar{\zeta})}{2i} = -\rho\,\sin\theta. \end{cases} \tag{9.6}$$

Since the real analytic solution $U_\rho(\zeta)$ vanishes identically for $\rho = 0$ and vanishes at $\zeta = 1$, there exists a constant $C > 0$ such that

$$|U_\rho(\zeta)| \leq C\,\rho\,|1-\zeta|, \tag{9.7}$$

for all $\rho \leq \varepsilon_1/4$. One then deduces from the elementary inequalities $\frac{2|\theta|}{\pi} \leq |1-e^{i\theta}| \leq |\theta|$ and $|\sin\theta| \leq |\theta|$ that

$$X_{1,\rho}(e^{i\theta}) \geq \frac{\rho}{2\pi^2}\,\theta^2, \quad \left|Y_{1,\rho}(e^{i\theta})\right|^2 \leq \rho^2\,\theta^2, \quad \left|U_\rho(e^{i\theta})\right|^2 \leq C^2\,\rho^2\,\theta^2. \tag{9.8}$$

Recall that $Z_{\sharp,\rho}(re^{i\theta}) \equiv 0$. Hence it suffices to choose

$$\rho_0 < \frac{1}{2\pi^2(1+C^2)} \tag{9.9}$$

in order to insure that

$$X_{1,\rho}(e^{i\theta}) > (Y_{1,\rho}(e^{i\theta}))^2 + \left|U_\rho(e^{i\theta})\right|^2, \tag{9.10}$$

for all $\theta \neq 0$, which completes the proof. □

§10. Meromorphic extension

The goal is to construct a meromorphic extension of H_1/H_2 to a neighborhood of p_1. Let $\Omega \subset \mathscr{V}_{\varepsilon_1}$ be an open neighborhood of the point $A_{\rho_0}(-1)$. Thanks to Lemma 2.7 in [23] (a slight modification of the geometric constructions in [34]), it is possible to include the disc $A_{\rho_0}(\zeta)$ in a *regular* (in the sense of Definition 1.8 in [23]; *see* also p. 493 of [24]) family of analytic discs $A_{\rho_0,s,v}(\zeta)$, where $s \in \mathbb{R}^{2m+d-1}$ satisfies $|s| < s_0$ for some $s_0 > 0$, where $v \in \mathbb{R}^{d-1}$ satisfies $|v| < v_0$ for some $v_0 > 0$ and where $A_{\rho_0,s,v}(\partial\Delta)$ is contained in

$$(M \cap \Delta_n(\varepsilon_1)) \cup (\mathscr{W}_{\varepsilon_1} \cap \Omega). \tag{10.1}$$

Essentially, the disc is deformed near $A_{\rho_0}(-1)$ in order that its direction at exit at $A_{\rho_0}(1) = p_1$ covers an open cone at p_1, by means of the parameter v, as in [34], [23], [24]. Then the parameter s achieves translation along M. By an application of the continuity principle (where property **(1)** of Lemma 9.4 is needed), there exist θ_0 with $\theta_0 > 0$ and r_0 with $r_0 > 0$, $1 - r_0 < 1$ such that the following set covered by pieces of analytic discs

$$\mathscr{W}_4 := \left\{A_{\rho_0,s,v}(re^{i\theta}) :\, |s| < s_0,\, |v| < v_0,\, |\theta| < \theta_0,\, 1-r_0 < r < 1\right\} \tag{10.2}$$

is a (curved) local wedge of edge M at p_1 (*see* FIGURE 4 just below) to which meromorphic functions in $\widetilde{\mathscr{W}_{\varepsilon_1}} \cup \mathscr{V}_{\varepsilon_1}$ extend meromorphically.

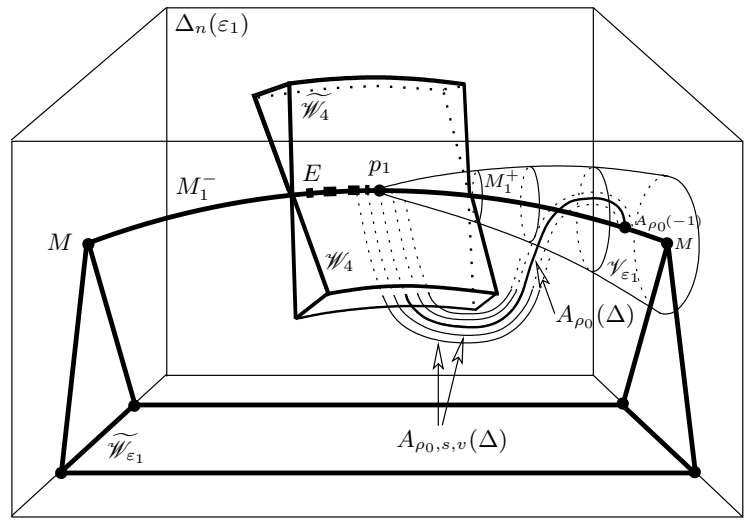

FIGURE 4: MEROMORPHIC EXTENSION TO A NEIGHBORHOOD OF p_1

Lemma 10.3. *In the preceding situation, three extension results hold:*

- **(1)** *for $j = 1, 2$, the $\mathbb{C}^{\nu_j}$-valued $\mathscr{C}^\infty$-smooth CR function b_j extends holomorphically to $\mathscr{W}_4$;*
- **(2)** *the CR quotient H_1/H_2 extends meromorphically to a symmetric wedge $\widetilde{\mathscr{W}_4}$ contained in $s(\mathscr{W}_4)$ which is only slightly smaller;*
- **(3)** *the CR quotient H_1/H_2 extends meromorphically to $\mathscr{W}_4$.*

Proof. As a preliminary, define translations of geometric objects in the normal directions $T_{p_1}\mathbb{C}^n/T_{p_1}M$ as follows. If a unitary vector $\upsilon_1 \in T_{p_1}\mathbb{C}^n$ with zero z-component and zero u-component is given, namely υ_1 is of the form $(0, i\upsilon_1) \in \mathbb{C}^m \times \mathbb{C}^d$ with $|\upsilon_1| = 1$, then for every η very small in comparison with ε_1, define the translation

$$(M \cap \Delta_n(\varepsilon_1)) + \eta\, \upsilon_1. \tag{10.4}$$

As $\mathscr{W}_{\varepsilon_1}$ and $\widetilde{\mathscr{W}_{\varepsilon_1}}$ are (approximatively) symmetric to each other, there exists a unitary vector $\upsilon_1 = (0, i\upsilon_1) \in T_{p_1}\mathbb{C}^n$ such that

$$\begin{cases} (M \cap \Delta_n(\varepsilon_1)) + \eta\, \upsilon_1 \subset \mathscr{W}_{\varepsilon_1} & \text{for } \eta > 0, \\ (M \cap \Delta_n(\varepsilon_1)) + \eta\, \upsilon_1 \subset \widetilde{\mathscr{W}_{\varepsilon_1}} & \text{for } \eta < 0. \end{cases} \tag{10.5}$$

In other words, $\upsilon_1 \in T_{p_1}\mathscr{W}_{\varepsilon_1}$ and $-\upsilon_1 \in T_{p_1}\widetilde{\mathscr{W}_{\varepsilon_1}}$. Translate also the analytic discs, which yields $A_{\rho_0,s,v}(\zeta) + \eta\, \upsilon_1$.

Prove now **(1)** of Lemma 10.3. By construction, the two $\mathscr{C}^\infty$-smooth CR functions b_1 and b_2 extend holomorphically to $\mathscr{W}_{\varepsilon_1}$. Since for every $\eta > 0$, the discs $A_{\rho_0,s,v}(\zeta) + \eta\, \upsilon_1$ have their boundaries contained in $\mathscr{W}_{\varepsilon_1}$ and are analytically isotopic to a point in $\mathscr{W}_{\varepsilon_1}$, it follows from the continuity principle that b_1 and b_2 extend holomorphically to the wedge $\mathscr{W}_4 + \eta\, \upsilon_1$. By

letting η tend to zero, it follows that b_1 and b_2 extend holomorphically to $\mathscr{W}_4$.

Next, prove **(2)** of Lemma 10.3. Since b_1 and b_2 extend holomorphically to $\mathscr{W}_4$, by reasoning as in the beginning of the proof of Main Lemma 5.2, it follows that H_1/H_2 extends meromorphically to the symmetric wedge $\widetilde{\mathscr{W}_4}$, which is contained in $s(\mathscr{W}_4)$, but only slightly smaller. Importantly, there exists a unitary vector $\upsilon_4 \in T_{p_1}\mathbb{C}^n$ with coordinates of the form $(0, i\upsilon_4) \in \mathbb{C}^m \times \mathbb{C}^d$ such that $\upsilon_4 \in T_{p_1}\mathscr{W}_4$ and $-\upsilon_4 \in T_{p_1}\widetilde{\mathscr{W}_4}$ (*see* again FIGURE 4).

Finally, prove **(3)** of Lemma 10.3. In the domain $\widetilde{\mathscr{W}_{\varepsilon_1}} \cup \mathscr{V}_{\varepsilon_1}$, the meromorphic extension of the CR quotient H_1/H_2, can be represented as a quotient P_1/P_2. Since for every $\eta < 0$, the discs $A_{\rho_0,s,v}(\zeta) + \eta\,\upsilon_1$ have their boundaries contained in $\widetilde{\mathscr{W}_{\varepsilon_1}} \cup \mathscr{V}_{\varepsilon_1}$ and are analytically isotopic to a point in $\widetilde{\mathscr{W}_{\varepsilon_1}} \cup \mathscr{V}_{\varepsilon_1}$, it follows from the continuity principle that P_1 and P_2 extend holomorphically to $\mathscr{W}_4 + \eta\,\upsilon_1$. By letting η tend to zero, one deduces that P_1 and P_2 extend holomorphically to $\mathscr{W}_4$. Hence the CR quotient H_1/H_2 extends meromorphically to $\mathscr{W}_4$.

The proof of Lemma 10.3 is complete. □

The proof of Main Lemma 7.1 is almost achieved. By Lemma 10.3, the CR quotient H_1/H_2 extends meromorphically to the union

$$\mathscr{W}_4 \cup \widetilde{\mathscr{W}_4} \cup \mathscr{V}_{\varepsilon_1}. \tag{10.6}$$

This union is connected (*cf.* FIGURE 5 just below. Denote again by P_1/P_2 this meromorphic extension, where P_1 and P_2 are holomorphic in the domain $\mathscr{W}_4 \cup \widetilde{\mathscr{W}_4} \cup \mathscr{V}_{\varepsilon_1}$.

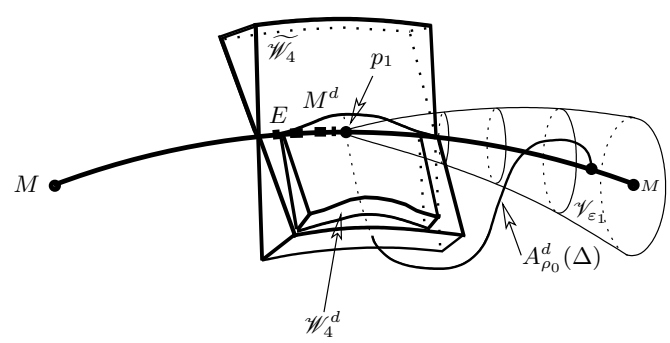

FIGURE 5: DEFORMATION OF THE WEDGE $\mathscr{W}_4$ OVER p_1

Introduce a one parameter family of smooth deformations M^d, $d \geq 0$, of M localized in a neighborhood of p_1, with $M^0 = M$, by pushing M near p_1 inside $\widetilde{\mathscr{W}_4}$. For this, it suffices to use a cut-off function $\chi(x, y, u)$ with support in a neighborhood of the origin, and for $d \in \mathbb{R}$, $d \geq 0$, to define M^d by the vectorial equation

$$v = \varphi(x, y, u) + d\,\chi(x, y, u)\,\upsilon_4, \tag{10.7}$$

where $\upsilon_4 \in T_{p_1}\mathscr{W}_4$ and $-\upsilon_4 \in T_{p_1}\widetilde{\mathscr{W}_4}$.

Since the resolution of Bishop's equation is stable under perturbation, there exists a smoothly deformed family $A^d_{\rho_0,s,v}(\zeta)$ of analytic discs with $A^0_{\rho_0,s,v}(\zeta) = A_{\rho_0,s,v}(\zeta)$ and a deformed wedge

(10.8)
$$\mathscr{W}_4^d := \{A^d_{\rho_0,s,v}(re^{i\theta}) : \, |s| < s_0, \, |v| < v_0, \, |\theta| < \theta_0, \, 1 - r_0 < r < 1\}.$$

Since $\mathscr{W}_4$ and $\widetilde{\mathscr{W}_4}$ have opposite directions, it is clear that one can insure that $\mathscr{W}_4^d$ contains the point p_1.

For $d > 0$, let the parameter ρ vary in the interval $[0, \rho_0]$ to deduce that the discs $A^d_{\rho_0,s,v}$ are analytically isotopic to a point in $\mathscr{W}_4 \cup \widetilde{\mathscr{W}_4} \cup \mathscr{V}_{\varepsilon_1}$. By a further application of the continuity principle, it follows that P_1 and P_2 extend holomorphically to $\mathscr{W}_4^d$, hence to a neighborhood of p_1. In conclusion, the CR quotient H_1/H_2 extends meromorphically to a neighborhood of p_1.

The proof of Main Lemma 7.1 is complete. □

In conclusion, the proof of Theorem 2.9 is complete.

§11 Proof of Lemma 2.12

Establish first the second sentence. Assume that the source M is a hypersurface and that h is essentially finite at p_0. Proceeding by contradiction, suppose that M is not minimal at p_0. Equivalently, the CR orbit of p_0 is an $(n-1)$-dimensional complex hypersurface passing through p_0, which coincides in fact with the Segre variety $S_{\bar{p}_0}$. Choose holomorphic coordinates $(z, w) \in \mathbb{C}^{n-1} \times \mathbb{C}$ vanishing at p_0 in which $S_{\bar{p}_0} = \{w = 0\}$ and represent M by a single complex equation $\bar{w} = \Theta(\bar{z}, z, w)$, where $S_{\bar{p}_0} = \{(z, 0)\}$, whence $\Theta(\bar{z}, z, 0) \equiv 0$. It follows that the usual basis of $(0, 1)$ vector fields tangent to M satisfies $\overline{L}_k = \partial/\partial\bar{z}_k + \mathrm{O}(w)\,\partial/\partial\bar{w}$.

In the fundamental equations

$$r'_{j'}(h(t), \overline{h(t)}) = 0, \tag{11.1}$$

for $j' = 1, \ldots, d'$, specify $t = (z, 0) \in M$, which yields:

$$r'_{j'}(h(z, 0), \bar{h}(\bar{z}, 0)) \equiv 0, \qquad j' = 1, \ldots, d'. \tag{11.2}$$

Since h is CR and $\{(z, 0)\}$ is contained in M, the mapping $z \mapsto h(z, 0)$ is holomorphic, hence it is justified to write $\bar{h}(\bar{z}, 0)$ instead of $\overline{h(z, 0)}$.

By assumption, h is essentialy finite at p_0. Hence apply the derivations $\overline{L}^\beta$, for $\beta \in \mathbb{N}^{n-1}$, to (11.1), which amounts to applying the derivations $\partial^\beta_{\bar{z}}$ to (11.2), which yields expressions of the form

$$S'_{j',\beta}\left(J^{|\beta|}_{\bar{z}}\bar{h}(\bar{z}, 0) : \, h(z, 0)\right) \equiv 0. \tag{11.3}$$

Exactly as in §3, it follows from the essential finiteness assumption that there exist Weierstrass polynomials such that

$$(h_{i'}(z, 0))^{N'_{i'}} + \sum_{1 \le I' \le N'_{i'}} H_{i',I'}\left(J^{\ell_0}_{\bar{z}}\bar{h}(\bar{z}, 0)\right)\,(h_{i'}(z, 0))^{N'_{i'} - I'} = 0, \tag{11.4}$$

Putting $\bar{z} = 0$, it follows that $h_{i'}(z, 0)$ is a constant for $i' = 1, \dots, n'$, hence vanishes identically. However, if $h(z, 0)$ vanishes identically, it is clearly impossible for h to be essentially finite at p_0, since differentiation with respect to $\bar{z}$ of $r'_{j'}(t', \bar{h}(\bar{z}, 0))$ gives nothing else than the constant zero, so $\mathbb{V}'_0$ is defined by $\{w' = 0\}$, hence is positive-dimensional. This establishes the second sentence of Lemma 2.12.

To establish the first sentence, remind again that if $\dim \mathscr{O}_{CR}(M', p'_0) = 2m'$, then the CR orbit of p'_0 is an m'-dimensional complex manifold passing through p'_0, which coincides in fact with the Segre variety $S'_{\bar{p}'_0}$. Assume that the coordinates $(z', w') \in \mathbb{C}^{m'} \times \mathbb{C}^{d'}$ are such that $S'_{\bar{p}'_0} = \{w' = 0\}$. Then the complex defining equations of M' are of the form $\bar{w}'_{j'} = \Theta'_{j'}(\bar{z}', z', w')$, where $\Theta'_{j'}(\bar{z}', z', 0) \equiv 0$ for $j' = 1, \dots, d'$. However, this clearly contradicts the two classical characterizations of essential finiteness ([2]).

In general, there exist coordinates $(z', w'_1, w'_2) \in \mathbb{C}^{m'} \times \mathbb{C}^{d'_1} \times \mathbb{C}^{d'_2}$ centered at p'_0, where d'_2 is the holomorphic codimension of the intrinsic complexification $(\mathscr{O}_{CR}(M', p'_0))^{i_c}$ and where $d'_1 = d' - d'_2$, such that M' is represented by

$$\begin{cases} \bar{w}_{1,j'_1} = \Theta'_{1,j'_1}(\bar{z}', z', w'_1, w'_2), & j'_1 = 1, \dots, d'_1, \\ \bar{w}_{2,j'_2} = \Theta'_{2,j_2}(\bar{z}', z', w'_1, w'_2), & j'_2 = 1, \dots, d'_2, \end{cases} \tag{11.5}$$

where $\Theta'_{2',j'_2}(\bar{z}', z', w'_1, 0) \equiv 0$ for $j'_2 = 1, \dots, d'_2$. Without loss of generality, assume that the coordinates are normal. By the characterization of essential finiteness in normal coordinates, the ideal in $\mathbb{C}\{z'\}$ generated by the partial derivatives $\partial^{\beta'}_{\bar{z}'} \Theta'_{1,j'_1}(z', 0, 0, 0)$, $j_1 = 1, \dots, d'_1$, and the partial derivatives $\partial^{\beta'}_{\bar{z}'} \Theta'_{2,j'_2}(z', 0, 0, 0)$, $j'_2 = 1, \dots, d'_2$, should be of finite codimension, where β' runs in $\mathbb{N}^{m'}$. However, the second collection vanishes identically. Thus, the ideal in $\mathbb{C}\{z'\}$ generated by the partial derivatives $\partial^{\beta'}_{\bar{z}'} \Theta'_{1,j'_1}(z', 0, 0, 0)$ is of finite codimension. This shows that the CR orbit $M' \cap \{w'_2 = 0\}$ is essentially finite at the origin. The proof of Lemma 2.12 is complete.

References

[1] Aĭrapetyan, R.A.: *Extension of CR-functions from piecewise smooth CR manifolds*, Mat. Sb. **134(176)** (1987), no. 1, 108–118. English transl. in Math. USSR-Sb. **62** (1989), no. 1, 111–120.

[2] Baouendi, M.S.; Ebenfelt, P.; Rothschild, L.P.: *Real submanifolds in complex space and their mappings*. Princeton Mathematical Series, **47**, Princeton University Press Princeton, NJ, 1999, xii+404 pp.

[3] Baouendi, M.S.; Jacobowitz, H.; Treves, F.: *On the analyticity of CR mappings*, Ann. Math **122** (1985), no. 2, 365–400.

[4] Baouendi, M.S.; Rothschild, L.P.: *Germs of CR maps between real analytic hypersurfaces*, Invent. Math. **93** (1988), no. 3, 481–500.

[5] Baouendi, M.S.; Rothschild, L.P.: *Geometric properties of mappings between hypersurfaces in complex space*, J. Differential Geom. **31** (1990), no. 2, 473–499.

[6] BAOUENDI, M.S.; TREVES, F: *A property of the functions and distributions annihilated by a locally integrable system of complex vector fields*, Ann. of Math. **113** (1981), no. 2, 387–421.

[7] COUPET, B.; DAMOUR, S.; MERKER, J.; SUKHOV, A.: *Sur l'algébricité des applications CR lisses à valeurs dans un ensemble algébrique réel*, C. R. Acad. Sci. Paris Sér. I **334** (2002), 953–956.

[8] COUPET, B.; PINCHUK, S.; SUKHOV, A.: *On partial analyticity of CR mappings*, Math. Z. **235** (2000), 541–557.

[9] COUPET, B.; PINCHUK, S.; SUKHOV, A.: *Analyticité des applications CR*, C. R. Acad. Sci. Paris Sér. I Math. **329** (1999), no. 6, 489–494.

[10] DAMOUR, S.: *On the analyticity of smooth CR mappings between real analytic CR manifolds*, Michigan Math. J. **49** (2001), no. 3, 583–603.

[11] DIEDERICH, K.; FORNÆSS, J.E.: *Pseudoconvex domains with real analytic boundary*, Ann. of Math. **107** (1978), no.2, 371–384.

[12] DIEDERICH, K.; FORNÆSS, J.E.: *Proper holomorphic mappings between real-analytic pseudoconvex domains in* $\mathbb{C}^n$, Math. Ann **282** (1988), no. 4, 681–700.

[13] DIEDERICH, D.; PINCHUK, S.: *Regularity of continuous CR-maps in arbitrary dimension*, Michigan Math. J. **51** (2003), no. 1, 111–140; no. 3, 667–668.

[14] DIEDERICH, K.; WEBSTER, S.M.: *A reflection principle for degenerate real hypersurfaces*, Duke Math. J. **47** (1980), no.4, 835–843.

[15] HAN, C.K.: *Analyticity of CR equivalences between some real analytic hypersurfaces in* $\mathbb{C}^n$ *with degenerate Levi-forms*, Invent. Math **73** (1983), no. 1, 51–69.

[16] HANGES, N.; TREVES, F.: *Propagation of holomorphic extendability of CR functions*, Math. Ann. **263** (1983), no. 2, 157–177.

[17] JÖRICKE, B.: *Deformation of CR-manifolds, minimal points and CR-manifolds with the microlocal analytic extension property*, J. Geom. Anal. **6** (1996), no. 4, 555–611.

[18] KAJIWARA, J.; SAKAI, E.: *Generalization of Levi-Oka's theorem concerning meromorphic functions*, Nagoya Math. J. **29** (1967), 75–84.

[19] LAMEL, B.: *Holomorphic maps of real submanifolds in complex spaces of different dimensions*, Pacific Math. J. **201** (2001), no. 2, 357–387.

[20] MERKER, J.: *Global minimality of generic manifolds and holomorphic extendibility of CR functions*, Internat. Math. Res. Notices **1994**, no. 8, 329 ff., approx. 14 pp. (electronic), 329–342.

[21] MERKER, J.: *On the local geometry of generic submanifolds of* $\mathbb{C}^n$ *and the analytic reflection principle* (Part I), Viniti, Kluwer, to appear, 80 pp.

[22] MERKER, J.: *Étude de la régularité analytique de l'application de réflexion CR formelle*, Prépublication, Université de Provence, 87 pages, Janvier 2004.

[23] MERKER, J.; PORTEN, E.: *On removable singularities for integrable CR functions*, Indiana Univ. Math. J. **48** (1999), no. 3, 805–856.

[24] MERKER, J.; PORTEN, E.: *On wedge extendability of CR-meromorphic functions*, Math. Z. **241** (2002), 485–512.

[25] MEYLAN, F; MIR, N.; ZAITSEV, D.: *Analytic regularity of CR-mappings*, Mathematical Research Letters **9** (2002), 73–93.

[26] MEYLAN, F; MIR, N.; ZAITSEV, D.: *Holomorphic extension of smooth CR-mappings between real-analytic and real-algebraic CR-manifolds*, Asian Journal of Mathematics **7** (2003), no. 4, ??–??.

[27] NEELON, T.S.: *On solutions of real analytic equations*, Proc. Amer. Math. Soc. **125** (1997), no. 3, 2531–2535.

[28] PINCHUK, S.: *On the analytic continuation of holomorphic mappings* (Russian), Mat. Sb. (N.S.) **98(140)** (1975) no. 3(11), 375–392, 416–435, 495–496.

[29] PINCHUK, S.: *Holomorphic mappings of real-analytic hypersurfaces* (Russian), Mat. Sb. (N.S.) **105(147)** (1978), no. 4 574–593, 640.

[30] PINCHUK, S.: State Thesis, Moscow, 1980.

[31] PUSHNIKOV, A. Yu.: *Holomorphicity of CR-mappings into a space of large dimension*, Mat. Zametki **48** (1990), no. 3, 147–149.

[32] TRÉPREAU, J.-M.: *Sur la propagation des singularités dans les variétés CR*, Bull. Soc. Math. Fr. **118** (1990), no. 4, 403–450.

[33] TUMANOV, A.E.: *Extending CR functions on a manifold of finite type over a wedge*, (Russian), Mat. Sb. (N.S.) **136(178)** (1988), no. 1, 128–139. English transl. in Math. USSR-Sb. **64** (1989) no. 1, 129–140.

[34] TUMANOV, A.E.: *Connections and propagation of analyticity for CR functions*, Duke Math. J. **73** (1994), no. 1, 1–24.

On the local geometry of generic submanifolds of $\mathbb{C}^n$ and the analytic reflection principle

Joël Merker

Table of contents :

Chapter 1. General introduction for Part I ..... **238.**
Chapter 2. Geometry of complexified generic submanifolds and Segre chains ..... **245.**
Chapter 3. Nondegeneracy conditions for generic submanifolds ..... **282.**
Chapter 4. Nondegeneracy conditions for power series CR mappings ..... **312.**

Journal of Mathematical Sciences (N. Y.) **125** (2005), no. 6, 751–824.

Chapter 1: General introduction for Part I

§1.1. Resumed historical background

1.1.1. Local Lie groups and the no Riemann mapping theorem at the boundary. Inspired by the general idea that, in analogy with É. Galois's group theory of algebraic equations, group analysis of differential equations should provide precious information about their solvability, S. Lie began around 1873–80 the classification of all continuous local groups of transformation acting on $\mathbb{C}^n$. He quickly succeeded for $n = 1$ and achieved the case $n = 2$ (*see* [18]), but the unavoidable complexity and richness for $n = 3$ exhausted his efforts; moreover, after more than one century, the task has never been achieved. Nevertheless, especially for $n = 2$, Lie's classificationf had the enormous power of providing any possible application to the study of transformations preserving arbitrary types of geometric structures. Thanks to the influence of G. Darboux, the works of S. Lie were rapidly known to French mathematicians. Based on the general approach of S. Lie, H. Poincaré (*see* [24]) discovered in 1907 that the automorphism groups of the two-dimensional unit ball $\mathbb{B}^2 := \{(z_1, z_2) \in \mathbb{C}^2 : |z_1|^2 + |z_2|^2 < 1\}$ and of the bidisc $\Delta^2 := \{(z_1, z_2) \in \mathbb{C}^2 : |z_1| < 1, |z_2| < 1\}$ are represented by rational, but not isomorphic transformations and he deduced immediately that $\mathbb{B}^2$ and Δ^2 are not biholomorphically equivalent. This discovery was the starting point of the *no Riemann mapping theorem* in several complex variables.

In the beginning of the twentieth century, the birth of pluricomplex geometry also coincided with two other fundamental memoirs of F. Hartogs [13] (1906) and of E.E. Levi [16] (1910). However, whereas this direction had important ramifications in the years 1930-50, especially with the works of W. Osgood, of H. Kneser, of R. Fueter, of E. Martinelli, of K. Behnke, of

F. Sommer, of S. Bochner, and culminated in the complete solution of the so-called *problem of Levi* given by K. Oka in 1951–52, the direction initiated by H. Poincaré in 1907 lay dormant for approximatively sixty years, with the major exception of four consecutive and historically isolated memoirs of B. Segre [25], [26] and of É. Cartan [3], [4] in the years 1931-32. Based on works of S. Lie, of A. Tresse (a french student of S. Lie), and of the young mathematician B. Segre, É. Cartan (who also had defended his thesis under the direction of S. Lie) provided an essentially complete classification of all Levi nondegenerate real analytic local hypersurfaces in $\mathbb{C}^2$, which ultimately relies on S. Lie's far reaching works about the classification of second order ordinary differential equations. Approximatively thirty years later, in 1974, É. Cartan's equivalence algorithm has been conducted in $\mathbb{C}^n$ for $n \geq 2$ by S.S. Chern and J.K. Moser in [5] to provide an *a priori* complete list of differential invariants for Levi nondegenerate real analytic hypersurface in $\mathbb{C}^n$ for $n \geq 2$, *see* also further developments by A.G. Vitushkin [33] and N.G. Kruzhillin [15]. However, the classification problem (in the sense of S. Lie) for real analytic Levi nondegenerate hypersurfaces in $\mathbb{C}^n$ for $n \geq 3$ is essentially left incomplete by the analysis in [5], because the list of differential invariants does not provide immediately a list of all possible automorphisms groups.

1.1.2. Reflection principle and regularity of CR mappings. The real birth of Cauchy-Riemann geometry occured in the beginning of the years 1970, especially when in 1974, C. Fefferman (*see* [10]) established that every biholomorphism between two smoothly bounded strongly pseudoconvex domains extend smoothly as a CR diffeomorphism between their boundaries. It is still conjectured, but up to now unproved, that the result remains true without any pseudoconvexity assumption. Thus, the classification of bounded domains up to biholomorphisms reduces to the classification of boundaries up to CR diffeomorphisms. At the same time, S. Pinchuk discovered in [21], [22], [23] an important local extension theorem for CR mappings between real analytic hypersurfaces, in which both the Schwarz reflection principle phenomenon and the Hartogs extension phenomenon contribute to the analytic continuation of CR mappings. In 1977, generalizing H. Poincaré's grounding result, S.M. Webster established in [34] a general result according to which local CR mappings are complex algebraic as soon as the source and target hypersurfaces are algebraic. Thus, in the aim of generalizing Carathéodory's theorems about the boundary regularity of conformal maps in the complex plane, the grounding works of C. Fefferman, of S. Pinchuk and of S.M. Webster initiated a completely new subject about the regularity (or the analytic continuation) of biholomorphic (or proper) mappings (or of local CR mappings). Since then, this subject has

been very active during almost thirty years and a substantial amount of efforts by numerous mathematicians has led to some remarkable refinements of the original statements[1].

§1.2. Conceptional description of the topics adressed in Part I of this memoir

1.2.1. Division in two parts. This memoir is devoted to a synthetic exposition of some recent results in the direction of the so-called *analytic reflection principle*. This terminology justifies by the fact that most arguments and proofs are based on Taylor series considerations. The main topics adressed in Part I of this memoir is to study *ab initio* the local geometry of arbitrary real algebraic or analytic submanifolds of $\mathbb{C}^n$ which are *generic*, namely which satisfy $T_pM + iT_pM = T_p\mathbb{C}^n$ for every $p \in M$. Our main goal is to explain how to go beyond the classical notion of Levi nondegeneracy, taking account of the complexity due to arbitrary dimension and codimension, in order to formulate appropriate generalizations of the reflection principle. In a forthcoming volume of the same collection, Part II of this memoir, which will be accompagnied by its own conceptional introduction, will be specifically devoted to the study of the analytic reflection principle. Thus the present Part I is a kind of thorough preparation, of which we can now present a quick description.

1.2.2. Canonical pair of foliations attached to the extrinsic complexification of a local generic submanifold. As will be established in Theorem 2.1.22, a given real analytic generic submanifold M in $\mathbb{C}^n$ of codimension d and of CR dimension $m = n - d$ may be locally represented, in a neighborhood of one of its points p, thanks to some appropriate coordinates $t = (z, w) \in \mathbb{C}^m \times \mathbb{C}^d$ vanishing at p, by means of d complex defining fundamental equations of the form

$$\bar{w}_j = \Theta_j(\bar{z}, z, w), \qquad j = 1, \dots, d. \tag{1.2.3}$$

Here, we assume that the Taylor series of the complex analytic functions $\Theta_j(\bar{z}, z, w) = \sum_{\beta\in\mathbb{N}^m,\, \gamma\in\mathbb{N}^m,\, \delta\in\mathbb{N}^d} \Theta_{j,\beta,\gamma,\delta}\, \bar{z}^\beta\, z^\gamma\, w^\delta$ converge normally in some polydisc centered at the origin in $\mathbb{C}^{m+m+d}$. As will be more evident in the sequel, one finds many advantages to deal with complex defining equations instead of real defining equations. Of course, the conjugate defining equations $w_j = \overline{\Theta}_j(z, \bar{z}, \bar{w}) = \sum_{\beta\in\mathbb{N}^m,\, \gamma\in\mathbb{N}^m,\, \delta\in\mathbb{N}^d} \overline{\Theta}_{j,\beta,\gamma,\delta}\, z^\beta\, \bar{z}^\gamma\, \bar{w}^\delta$ must

[1]However, one should remind of the historical bifurcation between the classification problem and the reflection principle. It is probable that too much emphasis has been put in the last decade on the reflection principle, which occulted in part the original motivation of classifying domains. Whereas this memoir is exclusively devoted to the so-called *analytic reflection principle*, we believe that it is time to come back to the original program of research hidden in the mathematical treasures of S. Lie and of É. Cartan, as suggested for instance in the recent works [29], [31].

define the same generic real submanifold M, and the ambiguity due to complex defining equations disappears thanks to the existence of the following fundamental functional equations, obtained in Theorem 2.1.32:

$$\bar{w}_j \equiv \Theta_j(\bar{z}, z, \overline{\Theta(\bar{z}, z, w)}), \qquad j = 1, \dots, d. \tag{1.2.4}$$

We say that M is *algebraic* (in the sense of J. Nash) if the series $\Theta_j(\bar{z}, z, w)$ are algebraic (a power series $\varphi(x) \in \mathbb{C}\{x\}$ is (Nash) *algebraic* if there exists a nonzero polynomial $P(x, y) \in \mathbb{C}[x, y]$ such that $P(x, \varphi(x)) \equiv 0$).

Following S.M. Webster's general philosophy (*cf.* [37]), let $\tau = (\zeta, \xi) \in \mathbb{C}^m \times \mathbb{C}^d$ be new independent coordinates corresponding to $\bar{t} = (\bar{z}, \bar{w})$ and define the *extrinsic complexification* of M to be the d-codimensional complex submanifold $\mathscr{M}$ of $\mathbb{C}^{2n}$ defined by the equations

$$\xi_j = \Theta_j(\zeta, z, w), \qquad j = 1, \dots, d, \tag{1.2.5}$$

or equivalently by $w_j = \overline{\Theta}_j(z, \zeta, \xi)$, $j = 1, \dots, d$. Notice that the expressions $\Theta_j(\zeta, z, w) = \sum_{\beta \in \mathbb{N}^m,\, \gamma \in \mathbb{N}^m,\, \delta \in \mathbb{N}^d} \Theta_{j,\beta,\gamma,\delta}\, \zeta^\beta\, z^\gamma\, w^\delta$ are meaningful only because the Θ_j are converging power series. This submanifold $\mathscr{M}$ comes immediately equipped with two foliations $\mathscr{F} =: \mathscr{M} \cap \{\tau = ct.\}$ and $\underline{\mathscr{F}} = \mathscr{M} \cap \{t = ct.\}$ by m-dimensional complex submanifolds, which were essentially discovered by B. Segre in [25], [26] (*see* also [3], [34]). We call the leaves of $\mathscr{F}$ the *complexified Segre varieties* and the leaves of $\underline{\mathscr{F}}$ the *conjugate complexified Segre varieties*. As we shall argue throughout this memoir, the main features of the geometry of M are hidden behind the interweaving of this pair of foliations $(\mathscr{F}, \underline{\mathscr{F}})$ lying on its complexification $\mathscr{M}$.

Since we are mainly interested in the study of mappings, let M' be a second generic submanifold of codimension d' in $\mathbb{C}^{n'}$ defined similarly by complex defining equations $\bar{w}'_{j'} = \Theta'_{j'}(\bar{z}', z', w')$, $j' = 1, \dots, d'$, where $m' = n' - d'$ and $t' = (z', w') \in \mathbb{C}^{m'} \times \mathbb{C}^{d'}$, and let a local mapping $t' = h(t) = (h_1(t), \dots, h_{n'}(t))$ from $\mathbb{C}^n$ to $\mathbb{C}^{n'}$ be a *local power series CR mapping from M to M'*. By this, we mean precisely that there exists a $d' \times d$ matrix of power series $a(t, \bar{t})$ such that if we split $h(t) = (f(t), g(t)) \in \mathbb{C}^{m'} \times \mathbb{C}^{d'}$, then the following vectorial formal power series holds in $\mathbb{C}[\![t, \bar{t}]\!]^{d'}$:

$$\bar{g}(\bar{t}) - \Theta'(\bar{f}(\bar{t}), f(t), g(t)) \equiv a(t, \bar{t})\, [\bar{w} - \Theta(\bar{z}, z, w)]. \tag{1.2.6}$$

In this memoir, we shall always assume that M and M' are real algebraic or analytic and we shall consider three different regularity classes for h, namely either $h(t)$ is a purely formal power series, or it is complex analytic, or it is complex algebraic. By complexifying (1.2.6), we trivially obtain the following identity in $\mathbb{C}[\![t, \tau]\!]^{d'}$:

$$\bar{g}(\tau) - \Theta'(\bar{f}(\tau), f(t), g(t)) \equiv a(t, \tau)\, [\xi - \Theta(\zeta, z, w)], \tag{1.2.7}$$

which means precisely that the power series mapping $(t', \tau') = (h(t), \bar{h}(\tau))$ maps the complexifications $\mathscr{M}$ into the complexification $\mathscr{M}'$. We shall denote by $h^c(t, \tau) := (h(t), \bar{h}(\tau))$ this complexified mapping. A straightforward but crucial observation is that h^c stabilizes the two pairs of foliations, namely it satisfies $h^c(\mathscr{F}) \subset \mathscr{F}'$ and $h^c(\underline{\mathscr{F}}) \subset \underline{\mathscr{F}}'$. The following symbolic figure is an attempt to illustrate this stabilization property[2].

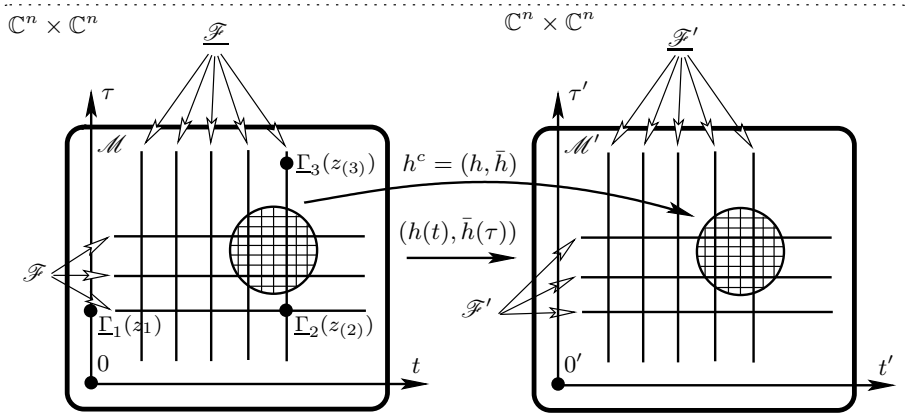

FIGURE 1.2.8: COMPLEXIFIED MAPPINGS RESPECT PAIRS OF FOLIATIONS

Some strong rigidity properties are due to the fact that $h^c = (h, \bar{h})$ *must respect these two pairs of foliations*. For instance, a theorem due to S.M. Webster in [34] states that every local biholomorphism $h : M \to M'$ between two *Levi nondegenerate* real algebraic hypersurfaces must be a complex algebraic mapping. This theorem may be interpreted intuitively by thinking that h^c (which is *a priori* only complex analytic) is forced to be as smooth as the two pairs of foliations $(\mathscr{F}, \underline{\mathscr{F}})$ and $(\mathscr{F}', \underline{\mathscr{F}}')$ are, namely to be complex algebraic.

1.2.9. Beyond Levi nondegeneracy: Minimality and finite nondegeneracy. In S.M. Webster's theorem, behind Levi nondegeneracy are hidden two highly different and independent concepts, the notion of *minimality* (in the sense of J.-M. Trépreau and A.E. Tumanov, following the general approach of H.J. Sussmann in [32], *see* also [2]) and the notion of *finite nondegeneracy* (introduced for the first time by K. Diederich and S.M. Webster in [9], and by C.K. Han in [12] and then studied by S.M. Baouendi, P. Ebenfelt and L.P. Rothschild in [1]).

The first main concept of minimality is of geometric nature and may easily be described in terms of the pair of foliations $(\mathscr{F}, \underline{\mathscr{F}})$. Let $z_1 \in \mathbb{C}^m$. We denote by $\underline{\Gamma}_1(z_1)$ the point located in the (vertical) m-dimensional complex

[2]However, we warn the reader that the representation is slightly incorrect, because the ambient codimensions d and d' in $\mathscr{M}$ and in $\mathscr{M}'$ of the unions of foliations $\mathscr{F} \cup \underline{\mathscr{F}}$ and $\mathscr{F}' \cup \underline{\mathscr{F}}'$ is invisible in this picture. One should imagine for instance that $\mathscr{M}$ and $\mathscr{M}'$ are three-dimensional spaces equipped with pairs of foliations by horizontal orthogonal real lines.

leaf $\underline{\mathscr{F}}_0$ passing through the origin which lies at distance z_1 from the origin, *see* FIGURE 1.2.8. Of course, $\underline{\Gamma}_1(z_1)$ belongs to $\mathscr{M}$. In other words, we move vertically from the origin up to distance $z_1 \in \mathbb{C}^m$. Let $z_2 \in \mathbb{C}^m$. From this point $\underline{\Gamma}_1(z_1)$, we then move horizontally up to distance z_2, namely following the m-dimensional complex leaf $\mathscr{F}_{\underline{\Gamma}_1(z_1)}$. We denote by $\underline{\Gamma}_2(z_{(2)})$ the resulting point, *see* again FIGURE 1.2.8, where we use the notation $z_{(2)} := (z_1, z_2) \in \mathbb{C}^{2m}$. Of course, the point $\underline{\Gamma}_2(z_{(2)})$ also belongs to $\mathscr{M}$. Let $z_3 \in \mathbb{C}^m$. We further move vertically up to distance z_3 and we denote the resulting point by $\underline{\Gamma}_3(z_{(3)})$, where $z_{(3)} = (z_1, z_2, z_3) \in \mathbb{C}^{3m}$. More generally, by following alternately the two foliations $\underline{\mathscr{F}}$ and $\mathscr{F}$, we may define for every $k \in \mathbb{N}$ a point $\underline{\Gamma}_k(z_{(k)})$, where $z_{(k)} = (z_1, \dots, z_k) \in \mathbb{C}^{km}$, which belongs to $\mathscr{M}$. It is easy to see that the mapping $z_{(k)} \mapsto \underline{\Gamma}_k(z_{(k)})$ satisfies $\underline{\Gamma}_k(0) = 0$ and has the same regularity as $\mathscr{M}$, namely it is complex algebraic or analytic. We call this map the *k-th conjugate Segre chain*. The precise construction of $\underline{\Gamma}_k$ is presented in Chapter 2 and there are combinatorial formulas which yield the complete expression of $\underline{\Gamma}_k(z_{(k)})$ by means of the fundamental power series $\Theta_j(\zeta, z, w)$.

The complexification $\mathscr{M}$ is then called *minimal at the origin* if there exists an integer k such that for every neighborhood $\mathscr{V}_k$ of the origin in $\mathbb{C}^{km}$, its image $\underline{\Gamma}_k(\mathscr{V}_k)$ contains a neighborhood of the origin in $\mathscr{M}$. Intuitively, the concept of minimality says that one can reach every point in a neighborhood of the origin in $\mathscr{M}$ by following alternately the two canonical foliations. Since the two foliations $\mathscr{F}$ and $\underline{\mathscr{F}}$ are biholomorphically invariant, the notion of minimality at one point $p \in M$ so defined is independent of the choice of coordinates vanishing at p. It is elementary to see that a Levi nondegenerate real analytic hypersurface in $\mathbb{C}^n$ ($n \geq 2$) is minimal at every point.

The second main concept of finite nondegeneracy is of analytic nature and it may be easily described by means of a development in power series of the defining equations of $\mathscr{M}$:

$$\xi_j = \sum_{\beta \in \mathbb{N}^m} \zeta^\beta \, \Theta_{j,\beta}(t). \tag{1.2.10}$$

Here, the $\Theta_{j,\beta}(t) = \Theta_{j,\beta}(z, w)$ are complex algebraic or analytic power series converging normally in a uniform polydisc centered at the origin. Let $k \in \mathbb{N}$. By the *k-th Segre mapping* we mean the local complex algebraic or analytic mapping

$$\mathscr{Q}_k : \mathbb{C}^n \ni t \longmapsto (\Theta_{j,\beta}(t))_{1 \leq j \leq d,\, |\beta| \leq k} \in \mathbb{C}^{N_{d,n,k}}, \tag{1.2.11}$$

where the integer $N_{d,n,k}$ denotes the total number of k-th jets of a d-vectorial mapping of n independent variables, namely $N_{d,n,k} = d\,\frac{(n+k)!}{n!\;k!}$. The generic submanifold M is then called *finitely nondegenerate at the origin* if there exists an integer k such that the k-th Segre mapping is of (maximal possible) rank n at the origin. Although the mapping $\mathscr{Q}_k$ is defined in terms of a system of coordinates and although it seems to depend on the choice of

complex defining equations for M, it may be established that its properties are essentially biholomorphically and invariantly attached to M, and in particular, the notion of finite nondegeneracy at a point $p \in M$ so defined is independent of the choice of coordinates vanishing at p. One can show that Levi nondegeneracy of M at the origin (in the sense that the kernel of the vector-valued Levi form of M is zero) is equivalent to the fact that the mapping $\mathscr{Q}_1$ is of rank n at the origin, hence the notion of finite nondegeneracy is a generalization of the notion of Levi nondegeneracy. More generally, M is called *holomorphically nondegenerate at the origin* (in the sense of N. Stanton, *cf.* [28]) if there exists an integer k such that the generic rank of $\mathscr{Q}_k$ is equal to n. Further study of nondegeneracy conditions on the mapping $\mathscr{Q}_k$ are presented in Chapter 3. Since this has been suggested in [8] and [9], we also endeavour a self-contained study of *jets of Segre varieties*, a fundamental topic for which we know no complete background reference.

1.2.12. Local geometry at a Zariski-generic point. Why are minimality and finite nondegeneracy adequate concepts from the point of view of local Cauchy-Riemann geometry ? Firstly, because it may be established that attached to a given arbitrary connected real agebraic or analytic generic submanifold M in $\mathbb{C}^n$, there exists an invariant integer $d_{2,M}$ and a proper real algebraic or analytic subvariety $E \subset M$ such that for every point $p \in M \backslash E$, there exists a neighborhood V_p of p in $\mathbb{C}^n$ and a system of complex algebraic or analytic coordinates $(t_1, \ldots, t_n)$ centered at p such $M \cap V_p$ is contained in the transverse intersection of $d_{2,M}$ Levi flat hypersurfaces defined by $\{\bar{t}_1 = t_1, \ldots, t_{d_{2,M}} = t_{d_{2,M}}\}$ and such that, moreover, for every constant $(c_1, \ldots, c_{d_{2,M}}) \in \mathbb{R}^{d_{2,M}}$, the intersection $M_c := M \cap \{t_1 = c_1, \ldots, t_{d_{2,M}} = c_{d_{2,M}}\} \cap V_p$ is minimal at every point (Corollary 2.8.5). Here, the M_c are elementary "bricks" and there is no "complex link" between them. Hence one may think that minimality is a good "general" assumption.

Secondly, it may be furthermore established that there exists an invariant integer n_M with $d \leq n_M \leq n$ and another proper subvariety $F \subset M$ such that for every point $p \in M \backslash F$, there exists a neighborhood V_p of p in $\mathbb{C}^n$ and a system of coordinates centered at p in which $M \cap V_p$ is a product $\underline{M}'_p \times \Delta^{n-n_M}$ of a d-codimensional generic submanifold $\underline{M}'_p$ in $\mathbb{C}^{n_M}$ by a complex polydisc Δ^{n-n_M}, such that moreover $\underline{M}'_p$ is finitely nondegenerate at its central point (Theorem 3.5.48). In particular, M is holomorphically nondegenerate if and only if $n = n_M$, in which case M is finitely nondegenerate at every point of $M \backslash F$. Generally speaking, from the point of view of CR geometry where "Complex" and "Real" concepts should be truly associated, the factor Δ^{n-n_M} is essentially superfluous, hence one should think that finite nondegeneracy is a good "general" assumption.

Whereas minimality and finite nondegeneracy do not impose dimensional restrictions, it is well known that the assumption of Levi nondegeneracy requires that $d \leq m^2$. In addition, there exist some classes of hypersurfaces

in $\mathbb{C}^3$ whose Levi form is of rank one at every point and which are finitely nondegenerate at every point (*see* Examples 3.2.15 and 3.2.20). In sum, we believe that minimality and finite nondegeneracy are adequate assumptions.

1.2.13. Nondegeneracy conditions for power series CR mappings. In Chapter 4 of part I of this memoir, we shall introduce various nondegeneracy conditions for power series CR mappings. As in §1.2.2, let h be a power series CR mapping from M to M', whose complexification $h^c = (h, \bar{h})$ satisfies the fundamental identities (1.2.7), which yields after replacing ξ by $\Theta(\zeta, t)$ the following formal identities in $\mathbb{C}[\![\zeta, t]\!]$:

$$\bar{g}_{j'}(\zeta, \Theta(\zeta, t)) \equiv \Theta_{j'}(\bar{f}(\zeta, \Theta(\zeta, t)), h(t)), \qquad j' = 1, \dots, d'. \tag{1.2.14}$$

We consider the following pairwise commuting m vector fields tangent to $\mathscr{M}$

$$\underline{\mathscr{L}}_k := \frac{\partial}{\partial \zeta_k} + \sum_{j=1}^{d} \frac{\partial \Theta_j}{\partial \zeta_k}(\zeta, t) \frac{\partial}{\partial \xi_j}, \tag{1.2.15}$$

which span the leaves of $\underline{\mathscr{F}}$ at every point. For every $\beta = (\beta_1, \dots, \beta_m) \in \mathbb{N}^m$, we introduce the derivation $\underline{\mathscr{L}}^\beta := \underline{\mathscr{L}}_1^{\beta_1} \cdots \underline{\mathscr{L}}_m^{\beta_m}$ of order $|\beta|$, which we apply to the equations (1.2.14). After some computations, this yields an expression of the form $R'_{j',\beta}(t, \tau, (\partial_\tau^\alpha \bar{h}(\tau))_{|\alpha| \leq |\beta|} : h(t))$, where $R'_{j',\beta}$ is a certain analytic expression in its variables. Based on the properties of the infinite collection of functions $R'_{j',\beta}$, we shall formulate five technical nondegeneracy conditions about h. For further intuitive explanation, we refer to the beginning of the conceptional introduction of the forthcoming Part II of this memoir.

`Note to the Russian translator(s):` Since my English has probably some deficiencies, please, do not hesitate to arrange the translation in classical Russian style. For any question about the meaning of a phrase or of a paragraph which would be difficult to understand and difficult to translate, please, do not hesitate to contact me by e-mail, or by regular mail, asking me to rewrite phrases or paragraphs in a better, more understandable style, which I would diligently do.

Chapter 2: Geometry of complexified generic submanifolds and Segre chains

2.1. Elementary local geometry of Cauchy-Riemann submanifolds

2.1.1. Formal, Analytic, Algebraic. As we shall essentially deal in the two parts of this memoir with local power series centered at the origin, we start with classical definitions. Let $\mathbb{K}$ be the field $\mathbb{R}$ of real numbers or the field $\mathbb{C}$ of complex numbers. Let $n \in \mathbb{N}$ be a positive integer. Let $x = (x_1, \dots, x_n) \in \mathbb{K}^n$. We denote $|x| := \max\{|x_1|, \dots, |x_n|\}$. Let $\mathbb{K}[\![x]\!]$ denote the local ring of formal power series in the n variables $(x_1, \dots, x_n)$.

By definition, an element $\varphi(x) \in \mathbb{K}[\![x]\!]$ writes in the form $\varphi(x) = \sum_{\alpha\in\mathbb{N}^n} \varphi_\alpha\, x^\alpha$, where $x^\alpha = x_1^{\alpha_1}\cdots x_n^{\alpha_n}$ and $\varphi_\alpha \in \mathbb{K}$ for every multiindex $\alpha = (\alpha_1,\dots,\alpha_n) \in \mathbb{N}^n$. We say that φ is a $\mathbb{K}$-*formal* power series. Such a power series $\varphi(x) = \sum_{\alpha\in\mathbb{N}^n} \varphi_\alpha\, x^\alpha$ is *identically zero* if all its coefficients φ_α are zero. We write this property $\varphi(x) \equiv 0$. If $\alpha = (\alpha_1,\dots,\alpha_n)$ is a multiindex in $\mathbb{N}^n$, we denote its *length* by $|\alpha| := \alpha_1+\cdots+\alpha_n$ and the corresponding partial derivative of a power series by $\partial_x^\alpha\varphi(x) := \partial_{x_1}^{\alpha_1}\cdots\partial_{x_n}^{\alpha_n}\varphi(x)$. Sometimes, we use also the equivalent notation $\partial^{|\alpha|}\varphi(x)/\partial x_1^{\alpha_1}\cdots\partial x_n^{\alpha_n}$. We have $\varphi_\alpha = [1/\alpha!]\,\partial_x^\alpha\varphi(x)|_{x=0}$. If the coefficients satisfy a Cauchy estimate like $|\varphi_\alpha| \le C\,\rho^{-|\alpha|}$, where $C > 0$ and $\rho > 0$, the series *converges normally* in the polydisc $\Delta_n(\rho) = \{x \in \mathbb{K}^n : |x| < \rho\}$. We say that φ is $\mathbb{K}$-*analytic* and we write $\varphi(x) \in \mathbb{K}\{x\}$. If there exists moreover a nonzero polynomial $P(X_1,\dots,X_n,\Phi) \in \mathbb{K}[X_1,\dots,X_n,\Phi]$ such that $P(x_1,\dots,x_n,\varphi(x_1,\dots,x_n)) \equiv 0$ for all $x \in \Delta_n(\rho)$, we say that φ is $\mathbb{K}$-*algebraic* (in the sense of J. Nash) and we write $\varphi(x) \in \mathscr{A}_\mathbb{K}\{x\}$. By classical elimination theory it follows that if, more generally, a power series $\varphi(x) \in \mathbb{K}\{x\}$ satisfies a polynomial equation $P(\varphi(x)) \equiv 0$, where $P(\Phi) \in \mathscr{A}_\mathbb{K}\{x\}[T]$ is a polynomial in the indeterminate Φ with coefficients in $\mathscr{A}_\mathbb{K}\{x\}$, then $\varphi(x)$ is $\mathbb{K}$-algebraic. We have the following inclusions:

$$\mathbb{K}[\![x]\!] \supset \mathbb{K}\{x\} \supset \mathscr{A}_\mathbb{K}\{x\}, \tag{2.1.2}$$

which are all strict. The three rings $\mathbb{K}[\![x]\!]$, $\mathbb{K}\{x\}$ and $\mathscr{A}_\mathbb{K}\{x\}$ are local, noetherian and they enjoy the Weierstrass division property.

2.1.3. Composition, differentiation and implicit function theorem. Furthermore, the rings $\mathbb{K}[\![x]\!]$, $\mathbb{K}\{x\}$ and $\mathscr{A}_\mathbb{K}\{x\}$ are stable under elementary algebraic operations, under composition, under differentiation and the implicit function theorem holds true. Only $\mathscr{A}_\mathbb{K}\{x\}$ is dramatically unstable under integration. The following known theorem, that we shall admit, summarizes these properties.

Theorem 2.1.4. *The following three statements hold true:*

- **(1)** *Let n and d be positive integers, let $x \in \mathbb{K}^n$, let $y \in \mathbb{K}^d$, let $\varphi(x)$ belong to $\mathbb{K}[\![x]\!]$, to $\mathbb{K}\{x\}$ or to $\mathscr{A}_\mathbb{K}\{x\}$, let $\psi_1(y),\dots,\psi_n(y)$ belong to $\mathbb{K}[\![y]\!]$, to $\mathbb{K}\{y\}$, or to $\mathscr{A}_\mathbb{K}\{y\}$ and vanish at the origin. Then $\varphi(\psi_1(y),\dots,\psi_n(y))$ belongs $\mathbb{K}[\![y]\!]$, to $\mathbb{K}\{y\}$, or to $\mathscr{A}_\mathbb{K}(y)$.*
- **(2)** *Let n be a positive integer and let $x \in \mathbb{K}^n$. If a power series $\varphi(x)$ belongs to $\mathbb{K}[\![x]\!]$, to $\mathbb{K}\{x\}$, or to $\mathscr{A}_\mathbb{K}\{x\}$, then for every multiindex $\alpha \in \mathbb{N}^n$, the partial derivative $\partial_x^\alpha\varphi(x)$ also belongs to $\mathbb{K}[\![x]\!]$, to $\mathbb{K}\{x\}$, or to $\mathscr{A}_\mathbb{K}\{x\}$.*
- **(3)** *Let n and d be positive integers, let $x \in \mathbb{K}^n$, $y \in \mathbb{K}^d$ and let $H_1(x,y),\dots,H_d(x,y)$ be a collection of formal, analytic or algebraic power series vanishing at the origin, namely the $H_j(x,y)$ belongs to $\mathbb{K}[\![x,y]\!]$, to $\mathbb{K}\{x,y\}$, or to $\mathscr{A}_\mathbb{K}\{x,y\}$ and they satisfy $H_j(0,0) = 0$ for $j = 1,\dots,d$. Assume that the functional determinant $(\partial H_{j_1}/\partial y_{j_2}(0))_{1\le j_1,j_2\le d}$ does not vanish. Then*

there exists a unique $\mathbb{K}^d$-valued power series mapping $\varphi(x) = (\varphi_1(x), \ldots, \varphi_d(x))$, where the $\varphi_j(x)$ belong to $\mathbb{K}[\![x]\!]$, to $\mathbb{K}\{x\}$, or to $\mathscr{A}_{\mathbb{K}}\{x\}$ and vanish at the origin, such that $H_j(x, \varphi(x)) \equiv 0$ for $j = 1, \ldots, d$.

2.1.5. Local submanifolds and their mappings. By definition, a *local submanifold* M of $\mathbb{K}^n$ is identified with the data of $d \leq n$ power series $r_1(x), \ldots, r_d(x)$ vanishing at the origin and which belong to $\mathbb{K}[\![x]\!]$, to $\mathbb{K}\{x\}$, or to $\mathscr{A}_{\mathbb{K}}\{x\}$ such that the linear forms $dr_1(0), \ldots, dr_d(0)$ are linearly independent. Two data $r(x) = (r_1(x), \ldots, r_d(x))$ and $\widehat{r}(x) = (\widehat{r}_1(x), \ldots, \widehat{r}_d(x))$ define the *same submanifold* if there exists an invertible $d \times d$ matrix $a(x) = (a_{j_1,j_2}(x))_{1 \leq j_1, j_2 \leq d}$ of power series in $\mathbb{K}[\![x]\!]$, in $\mathbb{K}\{x\}$, or in $\mathscr{A}_{\mathbb{K}}\{x\}$, such that $\widehat{r}_j(x) \equiv \sum_{l=1}^d a_{j,l}(x)\, r_l(x)$, or in matrix notation $\widehat{r}(x) \equiv a(x)\, r(x)$. Clearly this defines an equivalence relation between d-tuples of power series $r(x) = (r_1(x), \ldots, r_d(x))$ whose differentials are independent at the origin. A submanifold identifies with an equivalence class. We shall write $M : r_1(x) = \cdots = r_d(x) = 0$, keeping in mind that the identification of M with its "zero set" is meaningless in the formal category. We call d the *codimension* of M. Let $x' = \Phi(x)$ be a formal, algebraic or analytic invertible change of coordinates centered at the origin and let $x = \Phi'(x')$ denote its inverse. The *transformed submanifold* $M' := \Phi(M)$ is defined by the collection $r'(x') := (r_1(\Phi'(x')), \ldots, r_d(\Phi'(x')))$. It follows from the formal, analytic or algebraic implicit function theorem, that there exists a local invertible transformation $x' = \Phi(x)$ such that $r_1(\Phi'(x')) = x'_1, \ldots, r_d(\Phi'(x')) = x'_d$, so the image $M' := \Phi(M)$ writes $M' : x'_1 = \cdots = x'_d = 0$.

Let n and n' be two positive integers. A formal, analytic or algebraic *local mapping from $\mathbb{K}^n$ to $\mathbb{K}^{n'}$* consists of the datum of a n'-tuple $h(x) = (h_1(x), \ldots, h_{n'}(x))$ of power series $h_{i'}(x)$ in $\mathbb{K}[\![x]\!]$, in $\mathbb{K}\{x\}$, or in $\mathscr{A}_{\mathbb{K}}\{x\}$, with $h_{i'}(0) = 0$ for $i' = 1, \ldots, n'$. We write $x' = h(x)$. If n'' is a third positive integer and if $x'' = g(x')$ is a second formal, analytic or algebraic mapping, the *composition* $x'' = g(h(x))$ is the collection of power series $(g_1(h(x)), \ldots, g_{n''}(h(x)))$, which is a local mapping from $\mathbb{K}^n$ to $\mathbb{K}^{n''}$. If $\widetilde{x} = \Phi(x)$ and $\widetilde{x}' = \Psi(x')$ are changes of coordinates in $\mathbb{K}^n$ and in $\mathbb{K}^{n'}$, the *transformed mapping* $\widetilde{h}$ is the mapping $\widetilde{x}' = \widetilde{h}(\widetilde{x})$, where $\widetilde{h}(\widetilde{x}) := \Psi(h(\Phi^{-1}(\widetilde{x})))$. The *rank at the origin* of h is the rank of the Jacobian matrix $(\partial h_{i'}(0)/\partial x_i)_{1 \leq i' \leq n', 1 \leq i \leq n}$. We denote it by $\mathrm{rk}_0(h)$. The *generic rank* of h is the largest integer $e \leq \min(n, n')$ such that there exists an $e \times e$ minor of the Jacobian matrix $\mathrm{Jac}\, h(x)$ which does not vanish identically, but all $(e+1) \times (e+1)$ minors do vanish identically. We denote it by $\mathrm{genrk}_{\mathbb{K}}(h)$.

Let now d and d' be two positive integers and let $M : r_1(x) = \cdots = r_d(x) = 0$ and $M' : r'_1(x') = \cdots = r'_{d'}(x') = 0$ be two formal, analytic or algebraic submanifolds. We say that h *maps M into M'* if there exists a $d' \times d$ matrix $b(x) = (b_{j',j}(x))_{1 \leq j' \leq d', 1 \leq j \leq d}$ of formal, analytic or

algebraic power series such that $r'_{j'}(h(x)) \equiv \sum_{j=1}^{d} b_{j',j}\, r_j(x)$, or in matrix notation $r'(h(x)) \equiv b(x)\, r(x)$. This definition is meaningful, since if $\widehat{r}(x) = a(x)\, r(x)$ and $\widehat{r}'(x') = a'(x')\, r'(x')$ denote two equivalent defining formal, analytic or algebraic defining power series for M and for M', then $\widehat{r}'(h(x)) \equiv a'(h(x))\, r'(h(x)) \equiv a'(h(x))\, b(x)\, [a(x)]^{-1}\, \widehat{r}(x)$, so we have $\widehat{r}'(h(x)) \equiv \widehat{b}(x)\, \widehat{r}(x)$ with $\widehat{b}(x) := a'(h(x))\, b(x)\, [a(x)]^{-1}$.

2.1.6. Cauchy-Riemann submanifolds of $\mathbb{C}^n$. We want to study some aspects of the geometry of real submanifolds of $\mathbb{C}^n$. Most often in this memoir, we shall mainly be concentrated on the local study of pieces of submanifolds centered at one point. *However, we stress that we shall never use the language of germs, because it might sometimes be confusing*. Hence we have to work within precise neighborhoods of central points.

Without loss of generality, we can assume that the center point is the origin in suitable coordinates $z = x+iy \in \mathbb{C}^n$. Thus, we consider a (local) *real* d-codimensional submanifold M of $\mathbb{C}^n \cong \mathbb{R}^{2n}$ passing through the origin which defined by equations $r_1(x,y) = \cdots = r_d(x,y) = 0$ where the differentials $dr_1, \ldots, dr_d$ are linearly independent at the origin. If $z = x+iy \in \mathbb{C}$ or equivalently $(x,y) \in \mathbb{R}^{2n}$, we use the cube norms $|x| = \max_{1\leq k\leq n} |x_k|$, $|y| = \max_{1\leq k\leq n} |y_k|$ and the polydisc norm $|z| = \max_{1\leq k\leq n} |z_k|$, where $|z_k| = (x_k^2 + y_k^2)^{1/2}$. For given $\nu \in \mathbb{N}$ with $\nu \geq 1$ and $\rho \in \mathbb{R}$ with $\rho > 0$ we denote by $\mathbb{I}_\nu(\rho)$ the real cube $(-\rho,\rho)^\nu$ in $\mathbb{R}^\nu$. If $\rho > 0$, we denote by $\Delta_n(\rho) = \{z \in \mathbb{C}^n : |z| < \rho\}$ the open polydisc of radius ρ centered at the origin. *Throughout this memoir, we shall always work with cubes and polydiscs*.

For useful and complete background about Cauchy-Riemann (CR for short) structures, we refer the reader to [1], [7]. Here, we only give quick definitions for the purpose of being self-contained. Let J denote the complex structure of $T\mathbb{C}^n$, acting on real vectors as if it were multiplication by $\sqrt{-1}$, hence satisfying $J^2 = -\mathrm{Id}$. Let M be a connected local real algebraic or analytic submanifold of $\mathbb{C}^n$ of codimension d. For $p \in M$, the smallest J-invariant subspace of the tangent space T_pM is given by $T_p^cM := T_pM \cap JT_pM$ and is called the *complex tangent space to M at p*.

Definition 2.1.7. The submanifold M is called

- **(1)** *Holomorphic* if $T_p^cM = T_pM$ at every point $p \in M$;
- **(2)** *Totally real* if $T_p^cM = \{0\}$ at every point $p \in M$;
- **(3)** *Generic* if $T_pM + JT_pM = T_p\mathbb{C}^n$ at every point $p \in M$;
- **(4)** *Cauchy-Riemann* (CR for short) if the dimension of T_p^cM is equal to a fixed constant at every point $p \in M$.

In particular, holomorphic and totally real submanifolds are obviously CR. The generic submanifolds are also CR (and in fact of minimal possible CR dimension), because by the dimension formula $\dim_{\mathbb{R}}(E+F) = \dim_{\mathbb{R}} E + \dim_{\mathbb{R}} F - \dim_{\mathbb{R}}(E \cap F)$ for real vector subspaces, we deduce from $\dim_{\mathbb{R}}(T_pM + JT_pM) = 2n$ that $\dim_{\mathbb{R}}(T_pM \cap JT_pM) = 2n - 2d$, which is

constant. We shall remember that for generic submanifolds, the CR dimension is given by $m = n - d$.

By means of the dimension formula, we also see that if M is totally real, then $\dim_{\mathbb{R}} M \leq n$; also, if M is generic, then $\dim_{\mathbb{R}} M \geq n$. If M is totally real and generic, then $\dim_{\mathbb{R}} M = n$. In this case, we call M *maximally real*.

The two J-invariant spaces $T_pM \cap JT_pM$ and $T_pM + JT_pM$ are clearly of even real dimension. We denote by m_p the integer $\frac{1}{2}\dim_{\mathbb{R}}(T_pM \cap JT_pM)$ and call it the *CR dimension of M at p*. We denote by c_p the integer $n - \frac{1}{2}\dim_{\mathbb{R}}(T_pM + JT_pM)$ and call it the *holomorphic codimension of M at p*. Of course, we have $c_p = d - n + m_p$. In terms of these two integers m_p and c_p, we may rephrase the above definition as follows.

Definition 2.1.8. The d-codimensional real submanifold $M \subset \mathbb{C}^n$ is

- **(1')** Holomorphic if $2n - d = \dim_{\mathbb{R}} M = 2m_p$ at every point $p \in M$;
- **(2')** Totally real if $m_p = 0$ at every point $p \in M$;
- **(3')** Generic if $m_p = n - d$ at every point $p \in M$; in this case, m_p is as small as possible and we call the integer $m := n - d$ the *CR dimension* of M;
- **(4')** CR if m_p is equal to a fixed constant m at every point $p \in M$; in this case, we call the integer m the *CR dimension* of M; also, it follows that the holomorphic codimension $c_p := d - n + m_p = d - n + m$ is constant and we call it the *holomorphic codimension* of M.

For the proof of the following local graph representation theorem, we refer to [1], [7].

Theorem 2.1.9. *Let M be a real algebraic or analytic submanifold of $\mathbb{C}^n$ of codimension d.*

- **(1)** *Assume that M is holomorphic, let $m = \frac{1}{2}\dim_{\mathbb{R}} M$ be the CR dimension of M and let $d_1 := \frac{1}{2}d$. Then for every point $p_0 \in M$, there exist local complex algebraic or analytic coordinates $(z, w) \in \mathbb{C}^m \times \mathbb{C}^{d_1}$ vanishing at p_0 and there exists $\rho_1 > 0$ such that $M \cap \Delta_n(\rho_1)$ is given by the d_1 complex equations $w_j = 0$, $j = 1, \ldots, d_1$ or equivalently by the d real equations $\operatorname{Re} w_j = \operatorname{Im} w_j = 0$, $j = 1, \ldots, d_1$.*
- **(2)** *Assume that M is totally real, let $c = d - n \geq 0$ be the holomorphic codimension of M and let $d_1 := d - 2c$. Then for every point $p_0 \in M$, there exist complex algebraic or analytic coordinates $(w, v) \in \mathbb{C}^{d_1} \times \mathbb{C}^c$ centered at p_0 and there exists $\rho_1 > 0$ such that $M \cap \Delta_n(\rho_1)$ is given by the d real equations*

$$\begin{cases} \operatorname{Im} w_j = 0, & j = 1, \ldots, d_1, \\ \operatorname{Re} v_k = \operatorname{Im} v_k = 0, & k = 1, \ldots, c. \end{cases} \tag{2.1.10}$$

- **(3)** *Assume that M is generic and let $m = d - n$ be the CR dimension of M. Then for every point $p_0 \in M$ and for every choice of complex affine coordinates $(z, w) \in \mathbb{C}^m \times \mathbb{C}^d$ centered at p_0 such that $T^c_{p_0}M \cap \{w = 0\} = \{0\}$, there exists $\rho_1 > 0$ and there exist uniquely defined*

real algebraic or analytic functions φ_j, $j = 1, \dots, d$, *converging normally in the cube* $\mathbb{I}_{2m+d}(2\rho_1)$ *and vanishing at the origin such that* $M \cap \Delta_n(\rho_1)$ *is given by the* d *real equations*

$$\operatorname{Im} w_j = \varphi_j(\operatorname{Re} z, \operatorname{Im} z, \operatorname{Re} w), \qquad j = 1, \dots, d. \tag{2.1.11}$$

We can in addition choose the coordinates in order that $T_0 M$ *is given by the equations* $\operatorname{Im} w_j = 0$, $j = 1, \dots, d$, *in which case we have moreover* $d\varphi_j(0) = 0$, *for* $j = 1, \dots, d$.

(4) *Assume that* M *is CR, let* m *be the CR dimension of* M, *let* $c = d - n + m$ *be the holomorphic codimension of* M *and let* $d_1 := d - 2c \geq 0$. *Then for every point* $p_0 \in M$, *there exist local complex algebraic or analytic coordinates* $(z, w, v) \in \mathbb{C}^m \times \mathbb{C}^{d_1} \times \mathbb{C}^c$ *centered at* p_0 *with* $T^c_{p_0} M \cap \{w = v = 0\} = \{0\}$ *and there exist real algebraic or analytic functions* φ_j *converging normally in the cube* $\mathbb{I}_{2m+d_1}(2\rho_1)$ *for some* $\rho_1 > 0$ *and vanishing at the origin such that* $M \cap \Delta_n(\rho_1)$ *is given by the* d *real equations*

$$\begin{cases} \operatorname{Im} w_j = \varphi_j(\operatorname{Re} z, \operatorname{Im} z, \operatorname{Re} w), & j = 1, \dots, d_1, \\ \operatorname{Re} v_k = \operatorname{Im} v_k = 0, & k = 1, \dots, c. \end{cases} \tag{2.1.12}$$

In particular, M *is contained and generic in the complex linear subspace* $(\mathbb{C}^m \times \mathbb{C}^{d_1} \times \{0\}) \cap \Delta_n(\rho_1)$, *which we call the intrinsic complexification of* M. *We can in addition choose the coordinates in order that* $T_0 M$ *is given by the equations* $\operatorname{Im} w_j = 0$, $j = 1, \dots, d_1$, $\operatorname{Re} v_k = \operatorname{Im} v_k = 0$, $k = 1, \dots, c$, *in which case we have moreover* $d\varphi_j(0) = 0$ *for* $j = 1, \dots, d_1$.

2.1.13. Complex defining equations. We now consider a real algebraic or analytic *generic* submanifold M of $\mathbb{C}^n$ given as in Theorem 2.1.9 by real defining equations $v_j = \varphi_j(x, y, u)$, $j = 1, \dots, d$, where $(z, w) = (x + iy, u + iv) \in \mathbb{C}^m \times \mathbb{C}^d$. Unless the contrary is explicitely mentioned, *our generic submanifolds will always be of positive codimension* $d \geq 1$ *and of positive CR dimension* $m \geq 1$. Without loss of generality, we can assume that $d\varphi_j(0) = 0$ for $j = 1, \dots, d$. Replacing x by $(z + \bar{z})/2$, y by $(z - \bar{z})/2i$, u by $(w + \bar{w})/2$ and v by $(w - \bar{w})/2i$ in the defining equations of M, which yields

$$\frac{w_j - \bar{w}_j}{2i} = \varphi_j\left(\frac{z + \bar{z}}{2}, \frac{z - \bar{z}}{2i}, \frac{w + \bar{w}}{2}\right), \tag{2.1.14}$$

for $j = 1, \dots, d$, then by means of the algebraic or analytic implicit function theorem, we can solve the $\bar{w}_j$ in terms of $(\bar{z}, z, w)$, which yields

$$\bar{w}_j = \Theta_j(\bar{z}, z, w), \qquad j = 1, \dots, d, \tag{2.1.15}$$

for some complex algebraic or analytic functions Θ_j, which vanish at the origin and which are defined in a neighborhood of the origin in $\mathbb{C}^{2m+d}$. Shrinking $\rho_1 > 0$ if necessary, we can assume that the Θ_j converge normally in $\Delta_{2m+d}(2\rho_1)$. We call these new equations *complex defining equations* for M and we want to compare them with the real defining equations.

Generally speaking, given an arbitrary series $\Phi(t) = \sum_{\gamma\in\mathbb{N}^n} \Phi_\gamma\, t^\gamma$ with complex coefficients $\Phi_\gamma \in \mathbb{C}$, we are led to define the series $\overline{\Phi}(t) := \sum_{\gamma\in\mathbb{N}^n} \overline{\Phi}_\gamma\, t^\gamma$ by conjugating only its complex coefficients. With this definition, the conjugation operator (overline) can be applied independently over functions and over variables, as shown by the functional equation $\overline{\Phi(t)} \equiv \overline{\Phi}(\bar{t})$. We shall use this property very frequently.

Let $(z, w) \in M$. Conjugating the defining equations of M, we get $w_j = \overline{\Theta}_j(z, \bar{z}, \bar{w})$ and replacing the $\bar{w}_l$ by their value Θ_l, we get the following equation, valuable for all (z, w) belonging to M:

$$w_j = \overline{\Theta}_j(z, \bar{z}, \Theta(\bar{z}, z, w)), \qquad j = 1, \dots, d. \tag{2.1.16}$$

But as we may write $(z, w) = (z, u + i\varphi(x, y, u)) \in M$, where $u = (u_1, \dots, u_d) = \operatorname{Re} w$, we can replace in (2.1.16), which yields a power series identity in terms of the variables (x, y, u) for all $(x, y, u) \in \mathbb{I}_{2m+d}(\rho_1)$. As the $(2m + d)$-dimensional real algebraic or analytic submanifold $\{(x, y, u + i\varphi(x, y, u))\}$ of $\mathbb{C}^{2m+d}$ is maximally real, by an application of the generic uniqueness principle, we get the power series identity

$$w_j \equiv \overline{\Theta}_j(z, \bar{z}, \Theta(\bar{z}, z, w)), \qquad j = 1, \dots, d. \tag{2.1.17}$$

in $\mathbb{C}\{z, \bar{z}, \bar{w}\}$ or for all $(\bar{z}, z, w) \in \Delta_{2m+d}(\rho_1)$.

Conversely, suppose that these power series identities (2.1.17) holds. By the implicit function theorem, there exists unique complex algebraic or analytic solutions $\varphi_j((z+\zeta)/2, (z-\zeta)/2i, w)$, $j = 1, \dots, d$, $z \in \mathbb{C}^m$, $\zeta \in \mathbb{C}^m$, $w \in \mathbb{C}^d$ of the functional equations

(2.1.18)
$$\begin{cases} w_j - i\varphi_j((z+\zeta)/2, (z-\zeta)/2i, \zeta, w) \equiv \\ \qquad\qquad\qquad \equiv \Theta_j(\zeta, z, w + i\varphi((z+\zeta)/2, (z-\zeta)/2i, w)), \end{cases}$$

for $j = 1, \dots, d$. We then claim that $\varphi_j(x, y, u)$ is real for $x = (x_1, \dots, x_m) \in \mathbb{R}^m$, $y = (y_1, \dots, y_m) \in \mathbb{R}^m$ and $u = (u_1, \dots, u_d) \in \mathbb{R}^d$. Indeed, by replacing first w by $u + i\varphi((z+\bar{z})/2, (z-\bar{z})/2i, u)$ in the functional equations (2.1.17), we get

(2.1.19)
$$\begin{cases} u_j + i\varphi_j((z+\bar{z})/2, (z-\bar{z})/2i, u) \equiv \\ \qquad\qquad\qquad \overline{\Theta}_j(z, \bar{z}, \Theta(\bar{z}, z, u + i\varphi((z+\bar{z})/2, (z-\bar{z})/2i, u))), \end{cases}$$

for $j = 1, \dots, d$. Using the implicit equations (2.1.18) which define φ with ζ replaced by $\bar{z}$ and w replaced by u, we may then simplify the terms behind Θ in (2.1.19), wich yields

$$u_j + i\varphi_j(x, y, u) \equiv \overline{\Theta}_j(z, \bar{z}, u - i\varphi(x, y, u)), \qquad j = 1, \dots, d. \tag{2.1.20}$$

Conjugating these identities, we get

$$u_j - i\overline{\varphi}_j(x, y, u) \equiv \Theta_j(\bar{z}, z, u + i\overline{\varphi}(x, y, u)), \qquad j = 1, \dots, d. \tag{2.1.21}$$

Comparing with the implicit equations (2.1.18) with ζ replaced by $\bar{z}$ and w replaced by u, we see that $\varphi(x, y, u)$ and $\overline{\varphi}(x, y, u)$ are solutions of the

same implicit equations. By uniqueness in the implicit function theorem, we obtain $\overline{\varphi}(x,y,u) \equiv \varphi(x,y,u)$, as claimed. Finally, the identities $u_j - i\varphi_j(x,y,u) \equiv \Theta_j(z,\bar{z},u+i\varphi(x,y,u))$ show that the set of points (z,w) satisfying $\bar{w}_j = \Theta_j(\bar{z},z,w)$, $j=1,\dots,d$, coincides with the real algebraic or analytic generic submanifold of equations $v_j = \varphi_j(x,y,u)$, for $j = 1,\dots d$. In conclusion, we have established the following important theorem which we shall use very often in the sequel.

Theorem 2.1.22. *Let M be a real algebraic or analytic generic submanifold of codimension $d \geq 1$ and of CR dimension $m = n-d \geq 1$ in $\mathbb{C}^n$. Then for every point $p_0 \in M$, and for every choice of complex affine coordinates $t = (z,w) \in \mathbb{C}^m \times \mathbb{C}^d$ centered at p_0 such that $T^c_{p_0}M \cap \{w=0\} = \{0\}$, there exists $\rho_1 > 0$ and there exist uniquely defined complex algebraic or analytic functions Θ_j, $j=1,\dots,d$, vanishing at the origin, defined and converging normally in $\Delta_{2m+d}(2\rho_1)$ such that $M \cap \Delta_n(\rho_1)$ is given by the d complex defining equations*

$$\bar{w}_j = \Theta_j(z,\bar{z},w), \qquad j=1,\dots,d, \tag{2.1.23}$$

or equivalently by the d conjugate complex defining equations

$$w_j = \overline{\Theta}_j(z,\bar{z},\bar{w}), \qquad j=1,\dots,d. \tag{2.1.24}$$

Here, the vector-valued mapping $\Theta := (\Theta_1,\dots,\Theta_d)$ satisfies the two conjugate vectorial functional equations

$$\begin{cases} \bar{w} \equiv \Theta(\bar{z},z,\overline{\Theta}(z,\bar{z},\bar{w})), \\ w \equiv \overline{\Theta}(z,\bar{z},\Theta(\bar{z},z,w)). \end{cases} \tag{2.1.25}$$

Conversely, given a collection $\Theta = (\Theta_1,\dots,\Theta_d)$ of complex algebraic or analytic functions vanishing at the origin, converging normally in $\Delta_{2m+d}(2\rho_1)$ for some $\rho_1 > 0$ and satisfying the functional equations (2.1.25)*, then the set $M := \{(z,w) \in \Delta_n(\rho_1) : \bar{w}_j = \Theta_j(\bar{z},z,w),\ j=1,\dots,d\}$ is a real generic submanifold of codimension d. Finally, with these equations, a basis of $(0,1)$ vector fields tangent to M is given for $k=1,\dots,m$ by*

$$\overline{L}_k := \frac{\partial}{\partial \bar{z}_k} + \sum_{j=1}^{d} \frac{\partial \Theta_j}{\partial \bar{z}_k}(\bar{z},z,w)\,\frac{\partial}{\partial \bar{w}_j}. \tag{2.1.26}$$

Let $\tau = (\zeta,\xi) \in \mathbb{C}^m \times \mathbb{C}^d$ be new independent complex variables. As in §2.2.10 below, we define the *extrinsic complexification* $\mathscr{M}$ *of* M to be the complex analytic or algebraic d-codimensional submanifold of $\mathbb{C}^n \times \mathbb{C}^n$ defined by the equations $\xi_j - \Theta_j(\zeta,t) = 0$, $j=1,\dots,d$. The following lemma, which is equivalent to the functional equations (2.1.25), will also be very useful.

Lemma 2.1.27. *There exists an invertible $d \times d$ matrix $a(t,\tau)$ of algebraic or analytic power series such that*

$$\xi - \Theta(\zeta,t) \equiv a(t,\tau)\,[w - \overline{\Theta}(w,\tau)]. \tag{2.1.28}$$

Proof. We consider the involution σ defined by $\sigma(t,\tau) := (\tau, t)$. Let us say that an ideal $\mathscr{J}$ of $\mathscr{A}_{\mathbb{C}}\{t,\tau\}$ or of $\mathbb{C}\{t,\tau\}$ is *invariant under the involution* σ if for every element $\psi(t,\tau) \in \mathscr{J}$, we have $\overline{\psi}(\sigma(t,\tau)) = \overline{\psi}(\tau,t) \in \mathscr{J}$. Then the ideal $\mathscr{J}$ generated by the functions $(w_j - \xi_j)/2i - \varphi_j((z+\zeta)/2, (z-\zeta)/2i, (w+\xi)/2)$, for $j = 1,\dots,d$, is clearly invariant under the involution σ, since the φ_j are real functions. By the implicit function theorem, we can solve as above with respect to ξ, and we have

$$\mathscr{J} = \langle \xi_j - \Theta(\zeta,t)\rangle_{1\le j\le d} = \sigma_*(\mathscr{J}) = \left\langle w_j - \overline{\Theta}(z,\tau)\right\rangle_{1\le j\le d}, \tag{2.1.29}$$

from which the existence of the matrix $a(t,\tau)$ follows. □

2.1.30. Existence of normal coordinates. For notational convenience, it is often more appropriate in the real algebraic or analytic categories to consider power series not with respect to $(x,y) \in \mathbb{R}^m \times \mathbb{R}^m$ but with respect to $(z,\bar z) \in \mathbb{C}^m \times \mathbb{C}^m$, which is equivalent because $(x,y) = ((z+\bar z)/2, (z-\bar z)/2i)$ and $(z,\bar z) = (x+iy, x-iy)$.

Convention 2.1.31. As the local generic submanifold M is algebraic, analytic or formal, we shall write its defining equations $v_j = \varphi_j(z,\bar z,u)$, for $j = 1,\dots,d$, in coordinates $(z,w) = (x+iy, u+iv) \in \mathbb{C}^m \times \mathbb{C}^d$, where the φ_j are power series with respect to $(z,\bar z,u)$ centered at the origin. In such a representation, we mix the real and the complex variables.

We can now state the existence of *normal coordinates*, which are coordinates in which the conditions (2.1.34) below are satisfied. Such coordinates are not unique, as may easily be verified.

Theorem 2.1.32. *Let M be as in Theorem 2.1.22. Then there exists a complex algebraic or analytic change of coordinates $t' = h(t)$ of the special form*

$$z' = z, \qquad w' = g(z,w), \tag{2.1.33}$$

such that the image $M' := h(M)$ has real defining equations of the form $v'_j = \varphi'_j(z',\bar z',u')$, $j = 1,\dots,d$ and complex defining equations of the form $\bar w'_j = \Theta'_j(\bar z', z', w')$, $j = 1,\dots,d$, satisfying

$$\begin{cases} \varphi'_j(0,\bar z',u') \equiv \varphi'_j(z',0,u') \equiv 0, \\ \Theta'_j(0,z',w') \equiv \Theta'_j(\bar z',0,w') \equiv w'_j. \end{cases} \tag{2.1.34}$$

Proof. After a linear transformation of the form (2.1.33), we can assume that $T_0M = \{v = 0\}$, hence $d\varphi_j(0) = 0$, $j = 1,\dots,d$. Next, the local transformation defined by $z = z'$, $w = w' + i\varphi(0,0,w')$ straightens the maximally real d-dimensional submanifold

$$\{(0, v + i\varphi(0,0,v)) : j = 1,\dots,d\} \subset \{0\} \times \Delta_d(\rho_1) \tag{2.1.35}$$

to the d-dimensional plane $\{(0,v')\}$. Thus, we can also assume that $\varphi_j(0,0,v) \equiv 0$, $j = 1,\dots,d$. It follows that $\Theta_j(0,0,w) \equiv w_j$. We continue the proof with the complex defining equations of M.

But before proceeding further, we remark firstly that by reality of the power series φ'_j, we have $\varphi'_j(z', \bar{z}', u') \equiv \overline{\varphi}'_j(\bar{z}', z', u')$, whence the collection of relations $\varphi'_j(0, \bar{z}', u') \equiv 0$, $j = 1, \dots, d$, is equivalent to the collection of relations $\varphi'_j(z', 0, u') \equiv 0$, $j = 1, \dots, d$. Secondly, using the functional relations (2.1.25), we see immediately that the collection of relations $\Theta'_j(0, z', w') \equiv w'_j$, $j = 1, \dots, d$, is also equivalent to the collection of relations $\Theta'_j(\bar{z}', 0, w') \equiv w'_j$, $j = 1, \dots, d$. Thirdly, by inspecting the way how the real and the complex defining equations of M' are related (*see* especially the proof of Theorem 2.1.22), we observe easily that the collection of relations in the first line of (2.1.34) is equivalent to the collection of relation in the second line of (2.1.34). Consequently, it suffices to find a change of coordinates of the form (2.1.33) such that $\Theta'_j(\bar{z}', 0, w') \equiv w'_j$ for $j = 1, \dots, d$.

We then claim that the transformation $(z', w') := (z, \Theta(0, z, w))$ is appropriate. Indeed, working with the extrinsic complexifications $\mathscr{M}$ and $\mathscr{M}'$, we have $(z, w, \zeta, \xi) \in \mathscr{M}$ if and only if $(z, \Theta(0, z, w), \zeta, \overline{\Theta}(0, \zeta, \xi)) \in \mathscr{M}'$, which yields

$$\overline{\Theta}(0, \zeta, \xi) = \xi' = \Theta'(\zeta, z, \Theta(0, z, w)), \tag{2.1.36}$$

again for $(z, w, \zeta, \xi) \in \mathscr{M}$. Replacing ξ by its value $\Theta(\zeta, z, w)$ on $\mathscr{M}$ and setting $z = 0$, we obtain the power series identity

$$\overline{\Theta}(0, \zeta, \Theta(\zeta, 0, w)) \equiv \Theta'(\zeta, 0, \Theta(0, 0, w)). \tag{2.1.37}$$

But we remember that the functional equations (2.1.25) hold, which enables us to simplify the left hand side and we remember that we have already the relation $\Theta(0, 0, w) \equiv w$, which enables us to simplify the right hand side and we obtain the desired power series identity

$$w \equiv \Theta'(\zeta, 0, w). \tag{2.1.38}$$

This completes the proof of Theorem 2.1.32. □

2.1.39. The formal case. All the previous computations are meaningful in the purely formal case. Especially, Theorems 2.1.22 and 2.1.32 hold true in the formal category.

2.1.40. Conclusion. As we shall observe and confirm in the sequel, the representation of M by complex defining equations is substantially more convenient and more tractable than the representation by real defining equations. We remind that, unless the contrary is explicitely mentioned, *our generic submanifolds will always be of positive codimension* $d \geq 1$ *and of positive CR dimension* $m \geq 1$.

Notation 2.1.41. Throughout this memoir, we shall fix the following notations:

(1) The generic submanifold M of $\mathbb{C}^n$ will be of codimension $d \geq 1$ and of CR dimension $m = n - d \geq 1$. The coordinates on $\mathbb{C}^n$ will be denoted by

$$t = (t_1, \dots, t_n) = (z_1, \dots, z_k, w_1, \dots, w_d) \in \mathbb{C}^m \times \mathbb{C}^d = \mathbb{C}^n \tag{2.1.42}$$

and the complex defining equations of M by $\bar{w}_j = \Theta_j(\bar{z}, z, w)$, $j = 1, \dots, d$.

(2) The index $i \in \mathbb{N}$ will run from 1 to n, namely $i = 1, \dots, n$, for instance in the denotation of a vector field $L = \sum_{i=1}^n a_i(t)\, \partial_{t_i}$. The letter i will also be used to denote $\sqrt{-1}$.

(3) The index $j \in \mathbb{N}$ will run from 1 to d, namely $j = 1, \dots, d$.

(4) The index $k \in \mathbb{N}$ will run from 1 to m, namely $k = 1, \dots, m$. The letter k will also often be used to denote another integer varying in $\mathbb{N}$.

(5) Also, we denote $z_k = x_k + iy_k$, $w_j = u_j + iv_j$, $x = (x_1, \dots, x_m)$, $y = (y_1, \dots, y_m)$, $u = (u_1, \dots, u_d)$ and $v = (v_1, \dots, v_d)$.

2.1.43. Precise definition of local generic submanifolds. Throughout this memoir, we shall often need to localize our geometric constructions. It is therefore necessary to formulate once for all times a firm and precise choice of local representation.

Definition 2.1.44. A *local generic submanifold* M *of* $\mathbb{C}^n$ of codimension $d \geq 1$ and of CR dimension $m = n - d \geq 1$ is defined in coordinates $t = (z, w) = (x + iy, u + iv) \in \mathbb{C}^m \times \mathbb{C}^d$ vanishing at a point $p_0 \in M$ as a graph

$$M = \{(z, w) \in \Delta_n(\rho_1) : \, v_j = \varphi_j(x, y, u), \, j = 1, \dots, d\}, \tag{2.1.45}$$

where the functions φ_j are real algebraic or analytic for $|(x, y, u)| < 2\rho_1$. We also require that for all ρ with $0 \leq \rho \leq \rho_1$, we have $|\varphi(x, y, u)| < \rho$ if $|(x, y, u)| < \rho$, namely M is a "good graph", as shown in FIGURE 2.1.47 below. Of course, after peharps shrinking $\rho_1 > 0$, this condition is automatically satisfied if we adjust the coordinates in order that $T_0 M = \{v = 0\}$. In fact, we shall often prefer the representation by complex defining equations

$$M = \{(z, w) \in \Delta_n(\rho_1) : \, \bar{w}_j = \Theta_j(\bar{z}, z, w), \, j = 1, \dots, d\}, \tag{2.1.46}$$

where M is again a good graph and the Θ_j converge normally for $|(\bar{z}, z, w)| < 2\rho_1$.

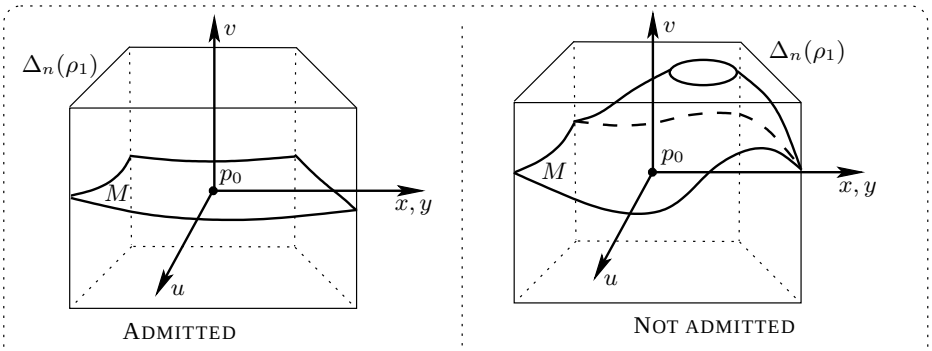

FIGURE 2.1.47: LOCAL GENERIC SUBMANIFOLD

The *process of localization* consists in choosing subsequent smaller polydiscs $\Delta_n(\rho_2)$, $\Delta_n(\rho_3)$, $\Delta_n(\rho_4)$, $\ldots$, with $0 < \cdots < \rho_4 < \rho_3 < \rho_2 < \rho_1$, where the choice of smaller radii ρ_2, ρ_3, ρ_4 depends on the construction of further geometric objects related to M. We say that p_0 is the *central point*. This process may be illustrated symbolically as follows:

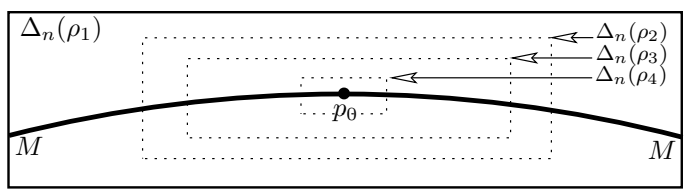

FIGURE 2.1.48: A LOCAL GENERIC SUBMANIFOLD M IN THE POLYDISC $\Delta_n(\rho_1)$

If a globally defined connected generic submanifold M is given, for every point $p_0 \in M$, we can obviously *localize* M *at* p_0 by choosing complex affine coordinates vanishing at p_0 such that M in a neighborhood of p_0 is represented as in Definition 2.1.44.

§2.2. SEGRE VARIETIES AND EXTRINSIC COMPLEXIFICATION

2.2.1. Reality condition. Although we shall mainly work with the complex defining equations, it will be useful on occasion to work with arbitrary real defining equations. So we consider an arbitrary set of d real defining equations for M which we denote by $\rho_j(t, \bar{t}) = 0$, $j = 1, \ldots, d$, for instance $\rho_j(t, \bar{t}) := v_j - \varphi_j(z, \bar{z}, u)$, with $\rho_j(0) = 0$. Here, we assume that the complex differentials $\partial\rho_1, \ldots, \partial\rho_d$ are linearly independent at the origin, so that M is generic. By reality of the ρ_j, we have $\rho_j(t, \bar{t}) \equiv \overline{\rho_j(t, \bar{t})}$. Developping the ρ_j in power series, we may write $\rho_j(t, \bar{t}) \equiv \sum_{\mu,\, \nu \in \mathbb{N}^n} \rho_{j,\mu,\nu}\, t^\mu\, \bar{t}^\nu$, with $\rho_{j,\mu,\nu} \in \mathbb{C}$. From this functional equation, we deduce that $\rho_{j,\mu,\nu} = \overline{\rho_{j,\nu,\mu}}$ for all j, μ, ν. Conversely, any such converging power series with complex coefficients satisfying $\rho_{j,\mu,\nu} = \overline{\rho_{j,\nu,\mu}}$ takes only real values. As an application, we may write $\overline{\rho_j(t, \bar{t})} \equiv \bar{\rho}_j(\bar{t}, t)$, so the reality condition on ρ_j is simply

$$\rho_j(t, \bar{t}) \equiv \bar{\rho}_j(t, \bar{t}), \qquad j = 1, \ldots, d. \tag{2.2.2}$$

Now, let $\tau \in \mathbb{C}^n$ be a new independent variable corresponding to the extrinsic complexification of the variable $\bar{t}$. We shall write symbolically $\tau := (\bar{t})^c$, where the letter "c" stands for the word "complexified". As (2.2.2) is equivalent to $\rho_{j,\mu,\nu} = \overline{\rho_{j,\nu,\mu}}$, we observe that the complexified series $\rho_j(t,\tau)$ satisfy the important symmetry functional equation

$$\rho_j(t,\tau) \equiv \bar{\rho}_j(\tau,t), \qquad j = 1,\dots,d. \tag{2.2.3}$$

which is simply obtained by replacing $\bar{t}$ by τ in (2.2.2). We can summarize these observations.

Lemma 2.2.4. *As the defining functions* $\rho_j(t,\bar{t}) = \sum_{\mu,\nu\in\mathbb{N}^n} \rho_{j,\mu,\nu}\, t^\mu\, \bar{t}^\nu$, $j = 1,\dots,d$ *are real power series, we have* $\rho_{j,\mu,\nu} = \overline{\rho_{j,\nu,\mu}}$ *for all* j,μ,ν *and*

(1) $\rho_j(t,\tau) \equiv \bar{\rho}_j(\tau,t)$.
(2) $\rho_j(t,\tau) = 0$ *if and only if* $\rho_j(\bar{\tau},\bar{t}) = 0$.

Property **(2)** follows trivially from **(1)** and will be useful later.

2.2.5. Classical Segre varieties and conjugate Segre varieties. Let $\rho_1 > 0$ such that the ρ_j converge normally in $\Delta_{2n}(2\rho_1)$ and consider the zero-set $M := \{t \in \Delta_n(\rho_1) :\ \rho_j(t,\bar{t}) = 0\}$. Let $\rho'_j(t,\bar{t}) = 0$ be an another choice of defining equations for the same generic submanifold. It follows that there exists an invertible $d\times d$ matrix $a(t,\bar{t})$ of real power series (of the same regularity as M, namely algebraic or analytic) such that $\rho'(t,\bar{t}) \equiv a(t,\bar{t})\,\rho(t,\bar{t})$. With this relation, we observe easily that the (classical) *Segre variety* associated to a point $p \in \Delta_n(\rho_1)$ with coordinates $t_p = (t_{1p},\dots,t_{np}) \in \mathbb{C}^n$, defined as in [34] by

$$S_{\bar{t}_p} := \{t \in \Delta_n(\rho_1) :\ \rho_j(t,\bar{t}_p) = 0,\ j = 1,\dots,d\}, \tag{2.2.6}$$

does not depend on the choice of defining equations for M, namely we also have $S_{\bar{t}_p} = \{t \in \Delta_n(\rho_1) :\ \rho'(t,\bar{t}_p) = 0\}$. In the litterature, this Segre variety is usually denoted by Q_p, *cf.* [1], [8], [9], [12], [22], [23], [27], [30], [31], [34], [35], [36]. Here, we choose instead the letter "S", because it is the initial of the name Segre. More importantly, we stress the notation $S_{\bar{t}_p}$ or $S_{\bar{p}}$, and not S_p, *with the bar of complex conjugation over* t_p, as in the expresson $\rho_j(t,\bar{t}_p)$.

In fact, for reasons of symmetry, we are also led to define the *conjugate Segre variety* by

$$\overline{S}_{t_p} := \{\bar{t} \in \Delta_n(\rho_1) :\ \rho_j(t_p,\bar{t}) = 0,\ j = 1,\dots,d\}. \tag{2.2.7}$$

To the author's knowledge, conjugate Segre varieties are not considered in the literature. As a matter of fact, if for an arbitrary subset $E \subset \mathbb{C}^n$ we define the set of conjugate points of E by $\overline{E} := \{\bar{t} :\ t \in E\}$, it follows that $\overline{S}_{t_p}$ is just the set of conjugate points of $S_{\bar{t}_p}$, as the reader may verify thanks to Lemma 2.2.4. It follows that we can write

$$\overline{S}_{t_p} = \overline{S}_{\bar{\bar{t}}_p} = \overline{S_{\bar{t}_p}} \quad \text{and} \quad S_{\bar{t}_p} = \overline{\overline{S}}_{\bar{t}_p} = \overline{\overline{S}_{t_p}}. \tag{2.2.8}$$

with the complex conjugation operator acting separately as an involution over the letter S and over its argument t_p. Finally, we would like to observe

that the third (tempting) definition $\{t \in \Delta_n(\rho_1) : \rho_j(t_p, \bar{t}) = 0, 1, \ldots, d\}$ (instead of (2.2.7)) does not provide us with the correct definition of conjugate Segre variety, because Lemma 2.2.4 implies that this set coincides in fact with $S_{\bar{t}_p}$.

We claim that both Segre and conjugate Segre varieties are biholomorphic invariants of M. Indeed, let $t' = h(t)$ be a local biholomorphic change of coordinates and denote by $t = h'(t')$ its inverse, by $M' := h(M)$ and by $\rho'_j(t', \bar{t}') := \rho_j(h'(t'), \bar{h}'(\bar{t}'))$ the defining equations of M', for $j = 1, \ldots, d$. Since h maps M into M', according to §2.1.5, there exists an invertible $d \times d$ matrix $a(t, \bar{t})$ of power series such that $\rho'(h(t), \bar{h}(\bar{t})) \equiv a(t, \bar{t})\, \rho(t, \bar{t})$. From this relation, it follows easily that $h(S_{\bar{t}_p}) = S'_{\bar{h}(\bar{t}_p)}$ and $h(\overline{S}_{t_p}) = \overline{S}'_{\bar{h}(\bar{t}_p)}$, which proves the claim. Finally, we collect some classical properties.

Lemma 2.2.9. *The following four properties are satisfied:*

(1) $q \in S_{\bar{t}_p}$ *if and only if* $p \in S_{\bar{t}_q}$.
(2) $p \in S_{\bar{t}_p}$ *if and only if* $p \in M$.
(3) $\bar{q} \in \overline{S}_{t_p}$ *if and only if* $\bar{p} \in \overline{S}_{t_q}$.
(4) $\bar{p} \in \overline{S}_{t_p}$ *if and only if* $p \in M$.

Proof. Indeed, applying Lemma 2.2.4 **(2)**, we have $\rho(t_q, \bar{t}_p) = 0$ if and only if $\rho(t_p, \bar{t}_q) = 0$, which yields **(1)** and **(3)**. Also, we have $\rho(t_p, \bar{t}_p) = 0$ if and only if $t_p \in M$, which yields **(2)** and **(4)**. □

2.2.10. Extrinsic complexification. Now, let $\zeta \in \mathbb{C}^m$ and $\xi \in \mathbb{C}^d$ denote some new independent coordinates corresponding to the complexification of the variables $\bar{z}$ and $\bar{w}$, which we denote symbolically by $\zeta := (\bar{z})^c$ and $\xi := (\bar{w})^c$, where the letter "c" stands for the word "complexified". We also write $\tau := (\bar{t})^c$, so $\tau = (\zeta, \xi) \in \mathbb{C}^n$. The *extrinsic complexification* $\mathscr{M} := (M)^c$ of M is the complex d-codimensional submanifold defined precisely by

(2.2.11)
$$\mathscr{M} := \{(z, w, \zeta, \xi) \in \Delta_n(\rho_1) \times \Delta_n(\rho_1) : \xi_j = \Theta_j(\zeta, z, w),\ j = 1, \ldots, d\}.$$

Let σ denote the antiholomorphic involution defined by $\sigma(t, \tau) := (\bar{\tau}, \bar{t})$. Since by Lemma 2.1.27, there exists an invertible $d \times d$ matrix $a(t, \tau)$ of power series such that $w - \overline{\Theta}(z, \zeta, \xi) \equiv a(t, \tau)[\xi - \Theta(\zeta, z, w)]$, we see that σ maps $\mathscr{M}$ bi-antiholomorphically onto $\mathscr{M}$. In this chapter, we shall essentially deal with $\mathscr{M}$ instead of dealing with M. In fact, M clearly imbeds in $\mathscr{M}$ as the intersection of $\mathscr{M}$ with the antiholomorphic diagonal defined by $\underline{\Lambda} := \{(t, \tau) \in \mathbb{C}^n \times \mathbb{C}^n : \tau = \bar{t}\}$. Also, we shall very frequently use the fact that $\mathscr{M}$ can be represented by the following two equivalent families of d complex defining equations:

(2.2.12)
$$\mathscr{M} : \ w_j = \overline{\Theta}_j(z, \zeta, \xi), \quad j = 1, \ldots, d, \quad \text{or} \quad \xi_j = \Theta_j(\zeta, z, w), \quad j = 1, \ldots, d.$$

§2.3. Complexified Segre varieties and complexified CR vector fields

2.3.1. Complexified Segre varieties. Next, for $\tau_p \in \Delta_n(\rho_1)$ fixed, we define the associated *complexified Segre variety* by

(2.3.2)
$$\mathscr{S}_{\tau_p} := \{(t,\tau) \in \Delta_{2n}(\rho_1) : \tau = \tau_p,\, w_j = \overline{\Theta}_j(z,\tau_p),\, j = 1,\dots,d\}.$$

We shall write symbolically $\mathscr{S}_{\tau_p} = (S_{\bar{t}_p})^c$. Clearly, $\mathscr{S}_{\tau_p}$ is an m-dimensional submanifold contained in $\mathscr{M}$ and it coincides in fact with the intersection of $\mathscr{M}$ with the horizontal slice $\{(t,\tau) : \tau = \tau_p\}$. Analogously, for $t_p \in \Delta_n(\rho_1)$ fixed, we define the associated *conjugate complexified Segre variety* by

(2.3.3)
$$\underline{\mathscr{S}}_{t_p} := \{(t,\tau) \in \Delta_{2n}(\rho_1) : t = t_p,\, \xi_j = \Theta_j(\zeta,t_p),\, j = 1,\dots,d\}.$$

Clearly again, $\underline{\mathscr{S}}_{t_p}$ is an m-dimensional submanifold contained in $\mathscr{M}$ and it coincides in fact with the intersection of $\mathscr{M}$ with the vertical slice $\{(t,\tau) : t = t_p\}$.

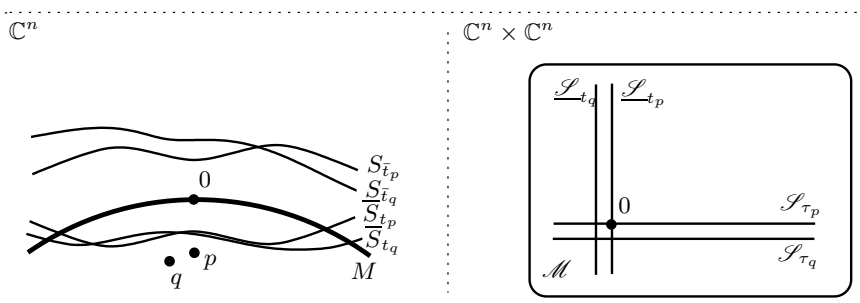

FIGURE 2.3.4: NON FOLIATION PROPERTY IN AMBIENT SPACE
COMPLEXIFICATION AS A BLOWING UP YIELDING TWO FOLIATIONS

It is very important to notice that the ambient Segre varieties $S_{\bar{t}_p}$ and $\overline{S}_{t_p}$ are extrinsic to M: they lie in general outside M, even in the Levi-flat case. Moreover, the union of $\cup_{p\in\Delta_n(\rho_1)} S_{\bar{p}}$ never makes a foliation by m-dimensional submanifolds. These assertions may easily be checked by inspecting the Levi-flat hyperplane $\{\operatorname{Im} w = 0\}$ in $\mathbb{C}^n$ and the Heisenberg sphere $\operatorname{Im} w = |z_1|^2 + \cdots + |z_{n-1}|^2$ in $\mathbb{C}^n$. Fortunately, by the strange miracle of extrinsic complexification, *we blow-up the two unions* $\cup_p S_{\bar{p}}$ *and* $\cup_p \overline{S}_p$ *in a double foliation of* $\mathscr{M}$ *by complex* m*-dimensional Segre varieties* (as explained in Theorem 2.3.9 below). This geometric observation is of utmost importance, is illustrated symbolically in FIGURE 2.3.4 and will be explained more closely in the next subparagraphs.

2.3.5. Complexified CR vector fields. We consider the following "natural" basis of $(1,0)$ vector fields tangent to M:

$$L_k := \frac{\partial}{\partial z_k} + \sum_{j=1}^{d} \frac{\partial \overline{\Theta}_j}{\partial z_k}(z,\bar{z},\bar{w})\,\frac{\partial}{\partial w_j}, \qquad k=1,\dots,m. \tag{2.3.6}$$

One verifies immediately that $L_k(w_j - \overline{\Theta}_j(z,\bar{z},\bar{w})) \equiv 0$ for $k=1,\dots,m$ and $j=1,\dots,d$. We also consider the conjugates of these vector fields, which form a basis of the $(0,1)$ vector fields tangent to M:

$$\overline{L}_k := \frac{\partial}{\partial \bar{z}_k} + \sum_{j=1}^{d} \frac{\partial \Theta_j}{\partial \bar{z}_k}(\bar{z},z,w)\,\frac{\partial}{\partial \bar{w}_j}, \qquad k=1,\dots,m. \tag{2.3.7}$$

Again obviously, we verify that $\overline{L}_k(\bar{w}_j - \Theta_j(\bar{z},z,w)) \equiv 0$ for $k=1,\dots,m$ and $j=1,\dots,d$. Of course, this second system of relations is the conjugate of the first.

By complexification, the vector fields behave as follows: we write $[\chi(t,\bar{t})]^c = \chi(t,\tau)$, if $\chi(t,\bar{t})$ is a real analytic function of $(t,\bar{t})$ and $\left[\sum_{j=1}^n a_j(t,\bar{t})\,\partial/\partial t_j + \sum_{j=1}^n b_j(t,\bar{t})\,\partial/\partial \bar{t}_j\right]^c := \sum_{j=1}^n a_j(t,\tau)\,\partial/\partial t_j + \sum_{j=1}^n b_j(t,\tau)\,\partial/\partial \tau_j$. It follows that $(L\chi)^c = L^c\chi^c$.

Consequently, we can complexify the pair of conjugate generating families of CR vector fields tangent to M given by (2.3.6) and (2.3.7), namely the vector fields $L_1,\dots,L_m$ and their conjugates $\overline{L}_1,\dots,\overline{L}_m$ above. Their complexification yields a pair of collections of m vector fields defined explicitely over $\Delta_n(\rho_1)\times\Delta_n(\rho_1)$ by

$$\begin{cases} \mathscr{L}_k := \dfrac{\partial}{\partial z_k} + \displaystyle\sum_{j=1}^{d} \dfrac{\partial \overline{\Theta}_j}{\partial z_k}(z,\zeta,\xi)\,\dfrac{\partial}{\partial w_j}, \quad k=1,\dots,m, \\[2ex] \underline{\mathscr{L}}_k := \dfrac{\partial}{\partial \zeta_k} + \displaystyle\sum_{j=1}^{d} \dfrac{\partial \Theta_j}{\partial \zeta_k}(\zeta,z,w)\,\dfrac{\partial}{\partial \xi_j}, \quad k=1,\dots,m. \end{cases} \tag{2.3.8}$$

We write $\mathscr{L}_k = (L_k)^c$ and $\underline{\mathscr{L}}_k = (\overline{L}_k)^c$. The reader may check directly that $\mathscr{L}_k(w_j - \overline{\Theta}_j(z,\zeta,\xi)) \equiv 0$ (this relation also holds by complexication), which shows that the vector fields $\mathscr{L}_k$ are tangent to $\mathscr{M}$. Similarly, $\underline{\mathscr{L}}_k(\xi_j - \Theta_j(\zeta,z,w)) \equiv 0$, so the vector fields $\underline{\mathscr{L}}_k$ are also tangent to $\mathscr{M}$. Of course, all of this is obvious, but we prefer to start slowly. Furthermore, we may check the commutation relations $[L_{k_1},L_{k_2}]=0$, $[\overline{L}_{k_1},\overline{L}_{k_2}]=0$, $[\mathscr{L}_{k_1},\mathscr{L}_{k_2}]=0$ and $[\underline{\mathscr{L}}_{k_1},\underline{\mathscr{L}}_{k_2}]=0$ for all $k_1,k_2=1,\dots,m$. By the theorem of Frobenius, it follows that the two m-dimensional distributions spanned by the two collections of m vector fields $\{\mathscr{L}_k\}_{1\le k\le m}$ and $\{\underline{\mathscr{L}}_k\}_{1\le k\le m}$ have the integral manifold property. This is not astonishing, due to the fact that the vector fields $\mathscr{L}_k$ are just the vector fields tangent

to the intersection of $\mathscr{M}$ with the sets $\{\tau = \tau_p = ct.\}$, which are the m-dimensional complexified Segre varieties $\mathscr{S}_{\tau_p}$ already defined above. Similarly, the $\underline{\mathscr{L}}_k$ have the conjugate complexified Segre varieties $\underline{\mathscr{S}}_{t_p}$ as integral manifolds. Hence in fact, we do not have to appeal to the theorem of Frobenius.

All the geometric observations which we have done so far may be gathered in the following statement just below. We shall frequently use the abbreviations $\mathscr{L} = \{\mathscr{L}_k\}_{1\leq k\leq m}$ and $\underline{\mathscr{L}} = \{\underline{\mathscr{L}}_k\}_{1\leq k\leq m}$. We denote by $\pi_t : (t,\tau) \mapsto t$ and $\pi_\tau : (t,\tau) \mapsto \tau$ the two canonical projections.

Theorem 2.3.9. *Let $\mathscr{M} = (M)^c$ be as above and let $\mathscr{L}_k$, $k = 1,\dots,m$ be a basis of complexified $(1,0)$ vector fields tangent to M and let $\underline{\mathscr{L}}_k$, $k = 1,\dots,m$, be their complexified conjugates. Recall that $\{\mathscr{L}_k\}_{1\leq k\leq m}$ and $\{\underline{\mathscr{L}}_k\}_{1\leq k\leq m}$ are Frobenius-integrable. Then the following four properties hold true:*

- **(1)** *$\mathscr{L}$ and $\underline{\mathscr{L}}$ induce naturally two local flow foliations $\mathscr{F}_{\mathscr{L}}$ and $\mathscr{F}_{\underline{\mathscr{L}}}$ of $\mathscr{M}$.*
- **(2)** *If $\sigma(t,\tau) := (\bar{\tau},\bar{t})$, then $\sigma(\mathscr{F}_{\mathscr{L}}) = \mathscr{F}_{\underline{\mathscr{L}}}$ and their two leaves passing through a point $p^c = (t_p,\bar{t}_p) \in \mathbb{C}^n \times \overline{\mathbb{C}^n}$ satisfy $\mathscr{F}_{\mathscr{L}}(p^c) \cap \mathscr{F}_{\underline{\mathscr{L}}}(p^c) = p^c$.*
- **(3)** *The fibers of the projections π_t and π_τ also coincide with the leaves of the flow foliations $\mathscr{F}_{\underline{\mathscr{L}}}$ and $\mathscr{F}_{\mathscr{L}}$, respectively.*
- **(4)** *The leaves of the foliation $\mathscr{F}_{\mathscr{L}}$ are the Segre varieties $\mathscr{S}_{\tau_p}$ and the leaves of the foliation $\mathscr{F}_{\underline{\mathscr{L}}}$ are the conjugate Segre varieties $\underline{\mathscr{S}}_{t_p}$:*

$$\mathscr{F}_{\mathscr{L}} = \bigcup_{\tau_p\in\Delta_n(\rho_1)} \mathscr{S}_{\tau_p} \quad \text{and} \quad \mathscr{F}_{\underline{\mathscr{L}}} = \bigcup_{t_p\in\Delta_n(\rho_1)} \underline{\mathscr{S}}_{t_p}. \tag{2.3.10}$$

In other words, the leaves of these two flow foliations are the two families of complexified (conjugate) Segre varieties. In symbolic representation, for these two foliations, we have the correspondence:

(2.3.11)

CR-flow foliations of $\mathscr{M}$ $\iff$ Foliations by complexified Segre varieties.

2.3.12. Conclusion. The following symbolic picture summarizes this geometrical theorem. However, we warn the reader that the codimension $d \geq 1$ of the union of the two foliations $\mathscr{F}_{\mathscr{L}}$ and $\mathscr{F}_{\underline{\mathscr{L}}}$ in $\mathscr{M}$ is not rendered visible in this two-dimensional figure. A three-dimensional FIGURE 2.3.3 will be provided below.

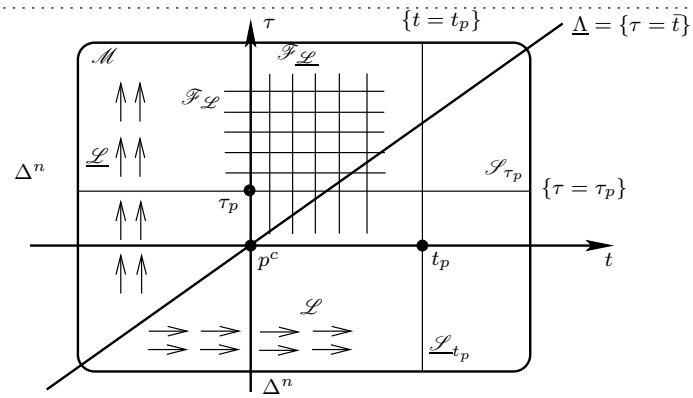

FIGURE 2.3.13: GEOMETRY OF THE COMPLEXIFICATION $\mathscr{M}$

2.4. MULTIPLE FLOWS AND SEGRE CHAINS

2.4.1. Pair of complex flows. Now, we introduce the "multiple" flows of the two collections of conjugate vector fields $(\mathscr{L}_k)_{1\le k\le m}$ and $(\underline{\mathscr{L}}_k)_{1\le k\le m}$. This multiple flow will be used frequently throughout the next chapters of Part II. Precisely, for an arbitrary point $p = (w_p, z_p, \zeta_p, \xi_p) \in \mathscr{M}$ and for an arbitrary complex "multitime" parameter $z_1 = (z_{1,1}, \dots, z_{1,m}) \in \mathbb{C}^m$, we define

(2.4.2)
$$\begin{cases} \mathscr{L}_{z_1}(z_p, w_p, \zeta_p, \xi_p) \ := \exp(z_1\mathscr{L})(p) := \exp(z_{1,1}\mathscr{L}_1(\cdots(\exp(z_{1,m}\mathscr{L}_m(p)))\cdots)) := \\ \qquad\qquad := \big(z_p + z_1,\ \overline{\Theta}(z_p + z_1, \zeta_p, \xi_p),\ \zeta_p,\ \xi_p\big)\,. \end{cases}$$

With this formal definition, there exists a maximal connected open subset Ω of $\mathscr{M} \times \mathbb{C}^m$ containing $\mathscr{M} \times \{0\}$ such that $\mathscr{L}_{z_1}(p) \in \mathscr{M}$ for all $(z_1, p) \in \Omega$. Analogously, for (ζ_1, p) running in a similar open subset $\underline{\Omega}$, we may define the map

$$\underline{\mathscr{L}}_{\zeta_1}(z_p, w_p, \zeta_p, \xi_p) := (z_p,\ w_p,\ \zeta_p + \zeta_1,\ \Theta(\zeta_p + \zeta_1, z_p, w_p))\,. \tag{2.4.3}$$

Of course, the two mappings (2.4.2) and (2.4.3) are of the same regularity as M, namely they are algebraic or analytic.

2.4.4. Segre chains. Now, let us start from the point p being the origin and let us move alternately in the (horizontal) direction of $\mathscr{F}_{\mathscr{L}}$ (namely the direction of $\mathscr{S}$) and in the (vertical) direction of $\mathscr{F}_{\underline{\mathscr{L}}}$ (namely the direction of $\underline{\mathscr{S}}$). More precisely, we consider the two maps $\Gamma_1(z_1) := \mathscr{L}_{z_1}(0)$ and $\underline{\Gamma}_1(z_1) := \underline{\mathscr{L}}_{z_1}(0)$, where $z_1 \in \mathbb{C}^m$. Next, we start from these endpoints and we move in the other direction. More precisely, we consider the two maps

$$\Gamma_2(z_1, z_2) := \underline{\mathscr{L}}_{z_2}(\mathscr{L}_{z_1}(0)), \qquad \underline{\Gamma}_2(z_1, z_2) := \mathscr{L}_{z_2}(\underline{\mathscr{L}}_{z_1}(0)), \tag{2.4.5}$$

where $z_1,\ z_2 \in \mathbb{C}^m$. Also, we define $\Gamma_3(z_1, z_2, z_3) := \mathscr{L}_{z_3}(\underline{\mathscr{L}}_{z_2}(\mathscr{L}_{z_1}(0)))$, *etc.* For the sake of concreteness, let us exhibit the complete expressions of

Γ_1, Γ_2 and Γ_3, which follows by a repeated application of formulas (2.4.2) and (2.4.3):

(2.4.6)
$$\begin{cases} \mathscr{L}_{z_1}(0) = \big(z_1,\, \overline{\Theta}(z_1,0,0),\, 0,\, 0\big)\,. \\ \underline{\mathscr{L}}_{z_2}(\mathscr{L}_{z_1}(0)) = \big(z_1,\, \overline{\Theta}(z_1,0,0),\, z_2,\, \Theta(z_2,z_1,\overline{\Theta}(z_1,0,0))\big)\,. \\ \mathscr{L}_{z_3}(\underline{\mathscr{L}}_{z_2}(\mathscr{L}_{z_1}(0)))) = \big(z_1+z_3,\, \overline{\Theta}(z_1+z_3,z_2,\Theta(z_2,z_1,\overline{\Theta}(z_1,0,0))),\, z_2,\, \Theta(z_2,z_1,\overline{\Theta}(z_1,0,0))\big)\,. \end{cases}$$

By induction, for every integer $k \in \mathbb{N}$ with $k \geq 1$, we obtain two maps $\Gamma_k(z_1,\dots,z_k)$ and $\underline{\Gamma}_k(z_1,\dots,z_k)$, where $z_1,\dots,z_k \in \mathbb{C}^m$. Clearly, there are precise combinatorial formulas generalizing (2.4.6). In the sequel, we shall often use the notation $z_{(k)} := (z_1,\dots,z_k) \in \mathbb{C}^{mk}$. We shall call the map Γ_k the *k-th Segre chain* and the map $\underline{\Gamma}_k$ the *conjugate k-th Segre chain*. Since $\Gamma_k(0) = \underline{\Gamma}_k(0) = 0$, for every $k \in \mathbb{N}_*$, there exists a sufficiently small open polydisc $\Delta_{mk}(\delta_k)$ centered at the origin in $\mathbb{C}^{mk}$ with $\delta_k > 0$ such that $\Gamma_k(z_{(k)})$ and $\underline{\Gamma}_k(z_{(k)})$ belong to $\mathscr{M}$ for all $z_{(k)} \in \Delta_{mk}(\delta_k)$.

We also exhibit a simple link between the maps Γ_k and $\underline{\Gamma}_k$. Let σ be the antiholomorphic involution defined by $\sigma(t,\tau) := (\bar{\tau},\bar{t})$. Since $w = \overline{\Theta}(z,\zeta,\xi)$ if and only if $\xi = \Theta(\zeta,z,w)$, this involution maps $\mathscr{M}$ onto $\mathscr{M}$ and it also fixes the antidiagonal $\underline{\Lambda}$ pointwise. Using the definitions (2.4.2) and (2.4.3), we see readily that $\sigma(\mathscr{L}_{z_1}(0)) = \underline{\mathscr{L}}_{\bar{z}_1}(0)$. It follows generally that $\sigma(\Gamma_k(z_{(k)})) = \underline{\Gamma}_k(\overline{z_{(k)}})$. To give a concrete illustration, we may compute the explicit expressions of $\underline{\Gamma}_1$, $\underline{\Gamma}_2$ and $\underline{\Gamma}_3$ and compare with (2.4.6):

(2.4.7)
$$\begin{cases} \underline{\mathscr{L}}_{z_1}(0) = (0,\, 0,\, z_1,\, \Theta(z_1,0,0))\,. \\ \mathscr{L}_{z_2}(\underline{\mathscr{L}}_{z_1}(0)) = \big(z_2,\, \overline{\Theta}(z_2,z_1,\Theta(z_1,0,0)),\, z_1,\, \Theta(z_1,0,0)\big)\,. \\ \underline{\mathscr{L}}_{z_3}(\mathscr{L}_{z_2}(\underline{\mathscr{L}}_{z_1}(0))) = \big(z_2,\, \overline{\Theta}(z_2,z_1,\Theta(z_1,0,0)),\, z_1+z_3,\, \Theta(z_1+z_3,z_2,\overline{\Theta}(z_2,z_1,\Theta(z_1,0,0)))\big) \end{cases}$$

Also, we observe that $\Gamma_{k+1}(z_{(k)},0) = \Gamma_k(z_{(k)})$, since $\mathscr{L}_0$ and $\underline{\mathscr{L}}_0$ coincide with the identity map by (2.4.2) and (2.4.3). So, for k increasing, the ranks at the origin of the maps Γ_k are increasing. We now introduce the following important definition.

Definition 2.4.8. The generic submanifold M is said to be *minimal* at p if the maps Γ_k are of (maximal possible) rank equal to $2m+d = \dim_{\mathbb{C}} \mathscr{M}$ at the origin in $\Delta_{mk}(\delta_k)$ for all k large enough.

In other words, M is minimal at p if and only if sufficiently high order Segre chains are submersive. Equivalently, sufficiently high order conjugate Segre chains are submersive. In the next Section 2.5, we shall show that minimality is characterized by the fact that the maps are of generic rank equal to $2m+d$ for all k large enough. First of all, in order to enlighten this definition, we shall prove a general *local orbit theorem* in the spirit of H.J. Sussmann [32].

2.4.9. Local orbit theorem in the $\mathbb{K}$-analytic category. Let $\mathbb{K} = \mathbb{R}$ or $\mathbb{C}$ and let $\Delta := \{x \in \mathbb{K} : |x| < 1\}$ and $r\Delta := \{x \in \mathbb{K} : |x| < r\}$. Let

$n \in \mathbb{N}$ with $n \geq 1$. In Δ^n equipped with coordinates $x = (x_1, \ldots, x_n)$, we consider the origin as a center point. Let $\mathbb{L} = \{L^a\}_{1 \leq a \leq A}$, $A \geq 1$, be a *finite* system of nonzero vector fields defined all over Δ^n. *We do not require that this set is stable under taking linear combinations with coefficients being analytic or algebraic functions over* Δ^n. Let $L \in \mathbb{L}$. As previously, we shall simply denote the flow map of L by $(t, x) \mapsto L_t(x) \equiv \exp(tL)(x)$.

We recall the defining properties of the flow map: $L_0(x) = x$ and $\frac{d}{dt}(L_t(x)) = L(L_t(x))$, where $L(x')$ denotes the value of L at x'. As is known, the $\mathbb{K}$-algebraic case is exceptional because the flow of a vector field L having $\mathbb{K}$-algebraic coefficients is in general transcendent. This is why we shall in fact make two kinds of precise regularity assumptions:

`(Algebraic):` The coefficients of all elements of $\mathbb{L}$ are $\mathbb{K}$-algebraic *and moreover* their flow if also $\mathbb{K}$-algebraic. In fact, the $\mathbb{K}$-algebraicity of the flow implies the $\mathbb{K}$-algebraicity of the coefficients.

`(Analytic):` The coefficients of all elements of $\mathbb{L}$ are $\mathbb{K}$-analytic power series centered at the origin converging in Δ^n, whence their flow is $\mathbb{K}$-analytic.

Choose now r with $0 < r \leq 1/2$. We first define finite concatenations of flow mappings of vector fields in $\mathbb{L}$ as follows. If $k \in \mathbb{N}_*$, $L = (L^1, \ldots, L^k) \in \mathbb{L}^k$, $t = (t_1, \ldots, t_k) \in \mathbb{K}^k$ and $x \in (r\Delta)^n$, we use again the notation $L_t(x) = L^k_{t_k}(\cdots(L^1_{t_1}(x))\cdots)$ whenever the composition is defined. Anyway, after bounding $k \leq 3n$, it is clear that there exists $\delta > 0$ such that all maps $(t, x) \mapsto L_t(x)$ are well-defined for $t \in (2\delta\Delta)^k$, $x \in (\frac{r}{2}\Delta)^n$ and satisfy $L_t(x) \in (r\Delta)^n$. By definition, the point $x' = L^k_{t_k} \circ \cdots \circ L^1_{t_1}(x)$ is the endpoint of a piecewise smooth algebraic or analytic curve with origin x: it consists in following L^1 during time t_1, following L^2 during time $t_2 \ldots$ and following L^k during time t_k.

Next, we shall say that an embedded small piece of $\mathbb{K}$-manifold $N \subset \Delta^n$ passing through the origin (which is either $\mathbb{K}$-algebraic or $\mathbb{K}$-analytic) is a *weak* $\mathbb{L}$*-integral manifold* if $T_x N \supset \mathbb{L}(x)$ for all $x \in N$. In the formal case, however, this condition is meaningless. Equivalently, we mean that for each $L \in \mathbb{L}$, $L|_N$ is tangent to N. Now, this new condition makes sense in the formal case. We shall in fact consider the formal case afterwards, as a generalization of the algebraic and analytic cases. In particular, it clearly ensues from the tangency of $L|_N$ to N that any integral curve of an element $L \in \mathbb{L}$ with origin a point $x \in N$ which belongs to N stays in N.

Now, we introduce the following special definitions. The $\mathbb{L}$*-orbit of* 0 *in* Δ^n, denoted by $\mathscr{O}_{\mathbb{L}}(0)$, is the set of all points $L_t(0) \in (r\Delta)^n$ for all $t \in (\delta\Delta)^k$, $k \leq 3n$. The reason why we bound $k \leq 3n$ will be clear afterwards. We shall say that the open set $(r\Delta)^n$ is $\mathbb{L}$*-minimal at* 0 if $\mathscr{O}_{\mathbb{L}}(0)$ contains a polydisc $(\varepsilon\Delta)^n$, where $\varepsilon > 0$. If $L = (L^1, \ldots, L^k) \in \mathbb{L}^k$ with $k \leq 3n$, we shall denote by $\Gamma_L(t)$ the mapping $t \mapsto L^k_{t_k}(\cdots(L^1_{t_1}(0))\cdots)$.

We can now state the *local orbit theorem*. By induction, we shall construct a special sequence of vector fields $L^{*k} := (L^{*1}, \ldots, L^{*k}) \in \mathbb{L}^k$,

$k \in \mathbb{N}_*$. We state a long but progressively explained theorem with the purpose of exhibiting all the relevant informations.

Theorem 2.4.10. *As above, let $\mathbb{L} = \{L^a\}_{1 \leq a \leq A}$, $A \in \mathbb{N}_*$, be a finite nonempty set of vector fields which are defined over Δ^n and satisfy one of the two regularity assumptions* `(Algebraic)` *or* `(Analytic)`. *Then there exists an integer $e \geq 1$ and a multiplet of vector fields $L^* = (L^{*1}, \ldots, L^{*e}) \in \mathbb{L}^e$ such that the following seven properties hold*:

- **(1)** *For every $k = 1, \ldots, e$, the map $(t_1, \ldots, t_k) \mapsto L^{*k}_{t_k}(\cdots(L^{*1}_{t_1}(0))\cdots)$ is of generic rank equal to k.*
- **(2)** *For every arbitrary element $L' \in \mathbb{L}$, the map $(t_1, \ldots, t_e, t') \mapsto L'_{t'}(L^{*e}_{t_e}(\cdots(L^{*1}_{t_1}(0))\cdots))$ is of generic rank e, hence e is the maximal possible generic rank.*
- **(3)** *There exists an element $t^* \in \Delta^e$ arbitrarily close to the origin which is of the special form $(t^*_1, \ldots, t^*_{e-1}, 0)$, namely with $t^*_e = 0$, and there exists an open connected neighborhood ω^* of t_* in Δ^e such that the map $\Gamma_{L^*} : t \mapsto L^{*e}_{t_e}(\cdots(L^{*1}_{t_1}(0)))$ is of constant rank e over ω^*.*
- **(4)** *After setting $L^* := (L^{*1}, \ldots, L^{*e})$, $K^* := (L^{*e-1}, \ldots, L^{*1})$ and $s^* := (-t^*_{e-1}, \ldots, -t^*_1)$, we then have $K^*_{s^*} \circ L^*_{t^*}(0) = 0$. Furthermore, the map $\psi : \omega^* \to \Delta^n$ defined by $\psi : t \mapsto K^*_{s^*} \circ L^*_t(0)$ is of constant rank equal to e over the domain ω^*.*
- **(5)** *Then the image $\psi(\omega^*)$ is a piece of $\mathbb{K}$-manifold passing through the origin which is either $\mathbb{K}$-algebraic or $\mathbb{K}$-analytic, because the flows of the elements of $\mathbb{L}$ are $\mathbb{K}$-algebraic or $\mathbb{K}$-analytic.*
- **(6)** *This piece of $\mathbb{K}$-manifold is a weak $\mathbb{L}$-integral manifold. Furthermore, very weak $\mathbb{L}$-integral manifold passing through 0 must contain $\mathscr{O}_{\mathbb{L}}(0)$ in a neighborhood of 0.*
- **(7)** *There exists $\varepsilon > 0$ such that $\mathscr{O}_{\mathbb{L}}(0) \cap (\varepsilon\Delta)^n = \psi(\omega^*)$.*

In conclusion, the local orbit $\mathscr{O}_{\mathbb{L}}(0)$ is represented by the small $\mathbb{K}$-manifold $\psi(\omega^*)$ and its dimension e is characterized by the generic rank properties **(1)** *and* **(2)**.

Proof. If all vector fields in $\mathbb{L}$ vanish at the origin, then $\mathscr{O}_{\mathbb{L}}(0) = \{0\}$. We now exclude this possibility. Choose a vector field $L^{*1} \in \mathbb{L}$ which does not vanish at 0. The map $t_1 \mapsto L^{*1}_{t_1}(0)$ is of generic rank one. If there exists $L' \in \mathbb{L}$ such that the map $(t_1, t') \mapsto L'_{t'}(L^{*1}_{t_1}(0))$ is of generic rank two, we choose one such L' and we denote it by L^{*2}. Continuing this process, we get vector fields $L^{*1}, \ldots, L^{*e}$ satisfying properties **(1)** and **(2)**. Since the generic rank of the map $\Gamma_{L^*} : (t_1, \ldots, t_e) \mapsto L^{*e}_{t_e}(\cdots(L^{*1}_{t_1}(0))\cdots)$ equals e, and since this map is either $\mathbb{K}$-algebraic or $\mathbb{K}$-analytic, there exist elements $t^* \in \Delta^e$ arbitrarily close to the origin such that its rank at t_* equals e. We claim that we can moreover choose t^* to be of the special form $(t^*_1, \ldots, t^*_{e-1}, 0)$, *i.e.* with $t^*_e = 0$. This is a consequence of the following lemma.

Lemma 2.4.11. *Let $n \in \mathbb{N}_*$, $e \in \mathbb{N}_*$, $t \in \mathbb{K}^e$ and $t \mapsto \varphi(t) = (\varphi_1(t), \ldots, \varphi_n(t)) \in \mathbb{K}^n$ be a mapping of generic rank equal to $(e-1)$*

which is either $\mathbb{K}$-algebraic or $\mathbb{K}$-analytic. Let $L' \in \mathbb{L}$ and assume that the mapping $\psi : (t, t') \mapsto L'_{t'}(\varphi(t))$ has generic rank e. Then there exists a point $(t^*, 0)$ at which the rank of ψ is equal to e.

Proof. Suppose on the contrary that at all points $(t^*, 0)$, the map $(t, t') \mapsto L'_{t'}(\varphi(t))$ has rank $\leq e - 1$. Choose t^* arbitrarily close to zero at which φ has maximal, hence locally constant rank $(e - 1)$. By the rank theorem, there exists a neighborhood ω^* of t^* in $\mathbb{K}^e$ such that $N := \varphi(\omega^*)$ is a small piece of $\mathbb{K}$-manifold which is either $\mathbb{K}$-algebraic or $\mathbb{K}$-analytic. Let $L' \in \mathbb{L}$. Since by assumption the rank of $(t, t') \mapsto L'_{t'}(\varphi(t))$ equals $(e - 1)$ at every point $(t^*, 0) \in \omega^* \times \mathbb{K}$, it follows necessarily that L' is tangent to N. Consequently, the flow of L' stabilizes N. Finally, for $\varphi(t) \in N$, we have $L'_{t'}(\varphi(t)) \in N$ also, whence the rank of $(t, t') \mapsto L'_{t'}(\varphi(t))$ is less than or equal to $\dim_{\mathbb{K}} N = e - 1$ at every point in a neighborhood of $(t^*, 0)$ in $\mathbb{K}^n \times \mathbb{K}$. We have proved that the mapping $(t, t') \mapsto L'_t(\varphi(t))$ is of generic rank $(e-1)$ in a neighborhood of $(t^*, 0)$ in $\mathbb{K}^e \times \mathbb{K}$, hence everywhere by the principle of analytic continuation, which contradicts the assumption that it has generic rank equal to e. This completes the proof. $\square$

End of the proof of Theorem 2.4.9. Now, we choose a point $(t_1^*, \dots, t_{e-1}^*, 0) \in \Delta^e$ arbitrarily close to 0 at which the rank of $t \mapsto L^{*e}_{t_e}(\cdots(L^{*1}_{t_1}(0))\cdots)$ is maximal and equals e, so we get **(3)**. In **(4)**, the property $K^*_{s^*} \circ L^*_{t^*}(0)$ is obvious, since the mapping:

$$L^{*1}_{-t_1^*} \circ \cdots \circ L^*_{-t_{e-1}^*} \circ L^{*e}_0 \circ L^*_{t_{e-1}^*} \circ \cdots \circ L^*_{t_1^*}(\cdot) = \mathrm{Id} \tag{4.5.7}$$

is the indentity. By **(2)**, the mapping $(t, s) \mapsto K^*_s \circ L^*_t(0)$ is also of generic rank e, whence its restriction to $\omega^* \times \{s^*\}$ is of constant rank e since the mapping $K^*_{s^*}(\cdot)$ is a local diffeomorphism. We get **(4)** and then **(5)** obviously. So we have constructed a piece N of $\mathbb{K}$-manifold passing through the origin. Let $L' \in \mathbb{L}$. We claim that L' is tangent to N. Otherwise, if L' would not be tangent, the mapping $(t, s, t') \mapsto L'_{t'}(K_s(L_t(0)))$ would be of generic rank $\geq e + 1$, contrarily to the definition of e. This completes the proof of Theorem 2.4.9. $\square$

§2.5. Segre type and Segre multitype

We now apply the general considerations of Theorem 2.4.9 to the specific situation where $\mathbb{K} = \mathbb{C}$, where Δ^n is replaced by $\mathscr{M}$ and where the collection $\mathbb{L}$ of vector fields is our previous complexified vector fields $\{\mathscr{L}_k, \underline{\mathscr{L}}_k\}_{1 \leq k \leq m}$. We also bring some refinements.

2.5.1. Increasing generic ranks. Let us denote by $\mathrm{genrk}_{\mathbb{C}}(\Phi)$ the *generic rank* of a $\mathbb{C}$-algebraic or $\mathbb{C}$-analytic map $\Phi : X \to Y$ of connected complex manifolds. Here of course, we have $\mathrm{genrk}_{\mathbb{C}}(\Gamma_1) = \mathrm{genrk}_{\mathbb{C}}(\underline{\Gamma}_1) = m$ and $\mathrm{genrk}_{\mathbb{C}}(\Gamma_2) = \mathrm{genrk}_{\mathbb{C}}(\underline{\Gamma}_2) = 2m$, which is evident in equations (2.4.6) and (2.4.7). We set $e_1 := m$ and $e_2 := m$. Next, we set $e_3 := \mathrm{genrk}_{\mathbb{C}}(\Gamma_3) - 2m$ and, by induction $e_{k+1} := \mathrm{genrk}_{\mathbb{C}}(\Gamma_{k+1}) - e_3 - \cdots - e_k - 2m$, whence

$\mathrm{genrk}_{\mathbb{C}}(\Gamma_k) = 2m + e_3 + \cdots + e_k$ if $k \geq 3$, and similarly, we can define the sequence $\underline{e}_k$ for $\underline{\Gamma}_k$. We notice at once that we have $\underline{e}_k = e_k$, since $\sigma(\Gamma_k(z_{(k)})) = \underline{\Gamma}_k(\overline{z_{(k)}})$.

We claim that $e_l = 0$ for all $l \geq k+1$ if $e_{k+1} = 0$ and $e_k \neq 0$. In other words, the generic rank enjoys a stabilization property. Indeed, we first choose a point $z^*_{(k)}$ arbitrarily close to the origin in $\mathbb{C}^{mk}$ such that Γ_k has (necessarily locally constant) rank equal to $2m + e_3 + \cdots + e_k$ at $z^*_{(k)}$ and we set $q := \Gamma_k(z^*_{(k)}) \in \mathscr{M}$. Then by the rank theorem, the image $\mathscr{H}$ of a neighborhood $\mathscr{W}^*$ of $z^*_{(k)}$ is a submanifold of $\mathscr{M}$ of dimension $2m + e_3 + \cdots + e_k$. We claim that the vector fields $\mathscr{L}_k$ and $\underline{\mathscr{L}}_k$ are all tangent to $\mathscr{H}$. For instance, to fix ideas, we assume that k is even (the odd case will be similar). Thus we can write $\Gamma_k(z_{(k)}) = \underline{\mathscr{L}}_{z_k}(\cdots(\mathscr{L}_{z_1}(0))\cdots)$, *i.e.* the chain Γ_k ends-up with a $\underline{\mathscr{L}}$. This shows that $\mathscr{H}$ is fibered by the leaves of $\mathscr{F}_{\underline{\mathscr{L}}}$, so the $\underline{\mathscr{L}}_k$ are already tangent to $\mathscr{H}$ at every point. By differentiating $\Gamma_{k+1} = \mathscr{L}_{z_{k+1}}(\Gamma_k(z_{(k)}))$ with respect to z_{k+1} at $z_{k+1} = 0$, we obtain the m-dimensional space $\mathscr{L}(\Gamma_k(z_{(k)}))$, namely the tangent space to the foliation $\mathscr{F}_{\mathscr{L}}$ at the point $\Gamma_k(z_{(k)})$. Then the assumption $e_{k+1} = 0$ entails that this space $\mathscr{L}(\Gamma_k(z_{(k)}))$ is necessarily contained in the tangent space to $\mathscr{H}$ at $\Gamma_k(z_{(k)})$, which proves the claim. Finally, as the $\mathscr{L}_k$ and the $\underline{\mathscr{L}}_k$ are all tangent to $\mathscr{H}$, it follows that their local flow at q is contained in $\mathscr{H}$, whence the range of the subsequent Γ_l, $l \geq k+1$, is locally contained in $\mathscr{H}$. Because they are either algebraic or analytic, this shows that their generic rank does not go beyond $2m+e_3+\cdots+e_k$, which proves the claim.

In conclusion, there exists a well-defined integer $\mu_0 \geq 2$ with $\mu_0 \leq d+2$ such that $e_3 > 0, \ldots, e_{\mu_0} > 0$ and $e_l = 0$, for all $l \geq \mu_0 + 1$. We call the integer μ_0 the *Segre type* of $\mathscr{M}$ at the origin and we call the μ_0-tuple $(m, m, e_3, \ldots, e_{\mu_0})$ the *Segre multitype* of $\mathscr{M}$ at the origin. This *Segre multitype* simply recollects all the jumps of generic ranks of the Γ_k. It is clear that Segre type and multitype are biholomorphic invariants, because the Segre foliations defined by $\mathscr{L}$ and $\underline{\mathscr{L}}$ are so. To summarize, we have :

(a) $\mathrm{genrk}_{\mathbb{C}}(\Gamma_k) = 2m + e_3 + \cdots + e_k = \mathrm{genrk}_{\mathbb{C}}(\underline{\Gamma}_k)$, for $2 \leq k \leq \mu_0$,
(b) $\mathrm{genrk}_{\mathbb{C}}(\Gamma_k) = 2m + e_3 + \cdots + e_{\mu_0} = \mathrm{genrk}_{\mathbb{C}}(\underline{\Gamma}_k)$, for $k \geq \mu_0$.

The main advantage of dealing with $\mathscr{M}$, $\mathscr{L}$, $\underline{\mathscr{L}}$, Γ_k and $\underline{\Gamma}_k$ lies in the fact that all these objects may be understood in a coordinate-free way. Even the two projections π_t and π_τ can be defined abstractly, because their fibers are the leaves of the Segre foliations. As §2.4.9, We may define the orbit $\mathscr{O}_{\mathscr{L},\underline{\mathscr{L}}}(\mathscr{M}, 0)$ and we have the following theorem.

Theorem 2.5.2. *Assume that M is a real algebraic or analytic generic submanifold of $\mathbb{C}^n$, let $p_0 \in M$, let $\mathscr{M} := (M)^c$ be its complexification and let $(p_0)^c := (p_0, \bar{p}_0)$, identified with the origin in coordinates (t, τ). Let $\mathscr{L}_k$ and $\underline{\mathscr{L}}_k$, $k = 1, \ldots, n$, be vector fields generating the pair of Segre foliations. Then there exists $z^*_{(\mu_0)} \in \mathbb{C}^{m\mu_0}$ arbitrarily close to the origin of the form $z^*_{(\mu_0)} = (z^*_1, \ldots, z^*_{\mu_0-1}, 0)$ and a small neighborhood $\mathscr{W}^*$ of $z^*_{(\mu_0)}$ in*

$\Delta_{m\mu_0}(\delta_{\mu_0})$ *such that, if we denote* $\omega^*_{(\mu_0-1)} := (-z^*_{\mu_0-1}, \dots, -z^*_1)$, *then we have*:

- **(c)** *The complex algebraic or analytic map* Γ_{μ_0} *is of rank* $2m + e_3 + \cdots + e_{\mu_0}$ *at* $z^*_{(\mu_0)}$.
- **(d)** $\Gamma_{2\mu_0-1}(z^*_{(\mu_0)}, \omega^*_{(\mu_0-1)}) = 0$.
- **(e)** *The restricted map* $\Gamma_{2\mu_0-1} : \mathscr{W}^* \times \omega^*_{(\mu_0-1)} \to \mathscr{M}$ *is of constant rank equal to* $2m + e_3 + \cdots + e_{\mu_0}$.
- **(f)** *The image* $\Gamma_{2\mu_0-1}(\mathscr{W}^* \times \omega^*_{(\mu_0-1)})$ *is a complex algebraic or analytic manifold-piece, denoted by* $\mathscr{O}_{\mathscr{L},\underline{\mathscr{L}}}(\mathscr{M}, 0)$ *and called the* $\{\mathscr{L}, \underline{\mathscr{L}}\}$*-orbit of the origin with the property that the vector fields* $\mathscr{L}_k$ *and* $\underline{\mathscr{L}}_k$ *are tangent to it.*
- **(g)** *This integer* $2m + e_3 + \cdots + e_{\mu_0}$ *is equal to* $\dim_{\mathbb{C}} \mathscr{O}_{\mathscr{L},\underline{\mathscr{L}}}(\mathscr{M}, 0)$.

Of course, the same statement holds with $\underline{\Gamma}_{2\mu_0-1}$ *instead of* $\Gamma_{2\mu_0-1}$.

Proof. The proof is similar to the proof of Theorem 2.4.10, with minor modifications. According to **(b)**, Γ_{μ_0} is of generic rank $2m+e_3+\cdots+e_{\mu_0}$. Consequently, for every point $z^*_{(\mu_0)} \in \Delta_{m\mu_0}(\delta_{\mu_0})$ outside of some proper complex subvariety, the map Γ_{μ_0} is of rank $2m+e_3+\cdots+e_{\mu_0}$ *at* $z^*_{(\mu_0)}$. In fact, we claim that we can even choose such a $z^*_{(\mu_0)}$ of the form $(z^*_1, \dots, z^*_{\mu_0-1}, 0)$, *i.e.* with $z^*_{\mu_0} = 0$. Indeed, as $\Gamma_{(k)}(z_{(k)}) = [\mathscr{L} \text{ or } \underline{\mathscr{L}}]_{z_k}(\Gamma_{(k-1)}(z_{(k-1)}))$, we can apply the following lemma, which follows directly form Lemma 2.4.11.

Lemma 2.5.3. *Let* $z \in \mathbb{C}^m$, $z' \in \mathbb{C}^{m'}$, *let* $\Gamma(z') \in \mathscr{M}$ *be a formal, algebraic or analytic map of* z' *with* $\Gamma(0) = 0$ *and let* $\varphi(z, z') := \mathscr{L}_z(\Gamma(z'))$ *or* $\varphi(z, z') := \underline{\mathscr{L}}_z(\Gamma(z'))$. *Then* φ *attains its maximal generic rank at some points of the form* $(0, z'^*) \in \mathbb{C}^m \times \mathbb{C}^{m'}$.

Now, we fix such a $z^*_{(\mu_0)}$ of the form $(z^*_1, \dots, z^*_{\mu_0-1}, 0)$, which satisfies **(c)** and we check that it satisfies the other claims. Let $\omega^*_{(\mu_0-1)} := (-z^*_{\mu_0-1}, \dots, -z^*_1)$. First, **(d)** is easy: suppose for instance μ_0 is even, then we have $\Gamma_{2\mu_0-1}(z^*_{(\mu_0)}, \omega^*_{(\mu_0-1)}) = \mathscr{L}_{-z^*_1} \circ \cdots \circ \mathscr{L}_{-z^*_{\mu_0-1}} \circ \underline{\mathscr{L}}_0 \circ \mathscr{L}_{z^*_{\mu_0-1}} \circ \cdots \circ \mathscr{L}_{z^*_1}(0) = 0$, because $\underline{\mathscr{L}}_0(q) = q$, $\mathscr{L}_{-w} \circ \mathscr{L}_w = \mathrm{Id}$ and $\underline{\mathscr{L}}_{-\zeta} \circ \underline{\mathscr{L}}_\zeta = \mathrm{Id}$. The odd case is similar. Now, we prove **(e)**. The restricted map $z_{(\mu_0)} \mapsto \mathscr{L}_{-z^*_1} \circ \cdots \circ \mathscr{L}_{-z^*_{\mu_0-1}} \circ \Gamma_{\mu_0}(z_{(\mu_0)})$ (again written in case μ_0 is even), is clearly of rank $2m + e_3 + \cdots + e_{\mu_0}$ at the point $z^*_{(\mu_0)}$, because the map $q \mapsto \mathscr{L}_{-z^*_1} \circ \cdots \circ \mathscr{L}_{-z^*_{\mu_0-1}}(q)$ is a local biholomorphism, by definition of flows. Notice that $\Gamma_{2\mu_0-1}$ is then of *constant rank* equal to $2m + e_3 + \cdots + e_{\mu_0}$ in a neighborhood of $(z^*_{(\mu_0)}, \omega^*_{(\mu_0-1)})$ in $\mathscr{W}^* \times \omega^*_{(\mu_0-1)}$, since, by **(b)**, $2m + e_3 + \cdots + e_{\mu_0}$ is already the maximum value of all the generic ranks of the Γ_k. This proves **(e)**. By definition, the orbit $\mathscr{O}_{\mathscr{L},\underline{\mathscr{L}}}(\mathscr{M}, 0)$ is the union of the ranges of the maps Γ_k and $\underline{\Gamma}_k$. It is easy to check that this double union coincides in fact with the union of only the Γ_k (or of only the $\underline{\Gamma}_k$), simply because, setting $z_1 = 0$, we have $\Gamma_k(0, z_2, \dots, z_k) \equiv \underline{\Gamma}_{k-1}(z_2, \dots, z_k)$. Thanks to the constant rank property **(e)**, we already know that this orbit contains

the $(2m + e_3 + \cdots + e_{\mu_0})$-dimensional manifold-piece passing through 0: $\mathscr{N} := \Gamma_{2\mu_0-1}(\mathscr{W}^* \times \omega^*_{(\mu_0-1)})$. Because by **(b)** the next generic ranks for $k \geq 2\mu_0 - 1$ do not increase and because of the principle of analytic continuation, we then deduce that all the ranges of the subsequent Γ_k are contained in this manifold piece $\mathscr{N}$ and it follows that $\mathscr{L}$ and $\underline{\mathscr{L}}$ are tangent to this manifold-piece. In conclusion, we get **(f)** and **(g)**, which completes the proof of Theorem 2.5.2. $\square$

In the hypersurface case, we have the following simple criterion of minimality, left to the reader.

Corollary 2.5.4. *If M is a real algebraic or analytic hypersurface,* i.e. *if $d = 1$, then*

(h) *M is minimal at $0 \iff \mu_0 = 3$.*
(i) *M is nonminimal at $0 \iff \mu_0 = 2$.*

2.5.7. Example. We now give a simple example in the hypersurface case which illustrates statements **(e)** and **(f)** of Theorem 2.5.2 in a very concrete way. We let M be the hypersurface of $\mathbb{C}^2$ of equation $z = \bar{z} + iw^2\bar{w}^2$. We choose $p = 0$ and here $2\mu_0 - 1 = 5$. We compute:

(2.5.8)
$$\begin{cases} \Gamma_1(z_1) = (z_1,\, 0,\, 0,\, 0) \\ \Gamma_2(z_1, z_2) = (z_1,\, 0,\, z_2,\, -iz_1^2 z_2^2) \\ \Gamma_3(z_1, z_2, z_3) = (z_1 + z_3,\, iz_2^2[z_3^2 + 2z_1z_3],\, z_2,\, -iz_1^2 z_2^2) \\ \Gamma_4(z_1, z_2, z_3, z_4) = (z_1 + z_3,\, iz_2^2[z_3^2 + 2z_1z_3],\, z_2 + z_4, \\ \qquad\qquad iz_2^2[z_3^2 + 2z_1z_3] - i[(z_2 + z_4)(z_1 + z_3)]^2) \\ \Gamma_5(z_1, z_2, z_3, z_4, z_5) = (z_1 + z_3 + z_5,\, iz_2^2[z_3^2 + 2z_1z_3] - \\ \qquad - i[(z_2 + z_4)(z_1 + z_3)]^2) + i[(z_1 + z_3 + z_5)(z_2 + z_4)]^2, \\ \qquad z_2 + z_4,\, iz_2^2[z_3^2 + 2z_1z_3] - i[(z_2 + z_4)(z_1 + z_3)]^2). \end{cases}$$

The maps Γ_k have range in $\mathscr{M}$, on which either the coordinates (z, w, ζ) or (ζ, ξ, z) can be chosen. We do the first choice for k even and the second choice for k odd. Thus, we view Γ_5 as a map $\mathbb{C}^5 \to \mathbb{C}^3_{(z,\zeta,\xi)}$, *i.e.* we forget the second w-coordinate in the above expression of Γ_5. Now, computing the 3×5 Jacobian matrix of Γ_5 at the point $(z^*_{(3)}, \omega^*_{(2)})$ as in Theorem 2.5.2 which is necessarily of the form $(z_1^*, z_2^*, 0, -z_2^*, -z_1^*)$, and for which we clearly have $\Gamma_5(z_1^*, z_2^*, 0, -z_2^*, -z_1^*) = 0$, we see that the determinant of the first 3×3 submatrix is equal to $2iz_1^*(z_2^*)^2$. Thus, it is nonzero for an arbitrary choice of $z_1^* \neq 0$ and $z_2^* \neq 0$. By the way, the question arises whether the integer $(2\mu_0 - 1)$ in Theorem 2.5.2 is optimal. Incidentally, this example shows that it is optimal. Indeed, if we ask whether there exists $z^*_{(4)} = (z_1^*, z_2^*, z_3^*, z_4^*)$ such that $\Gamma_4(z^*_{(4)}) = 0$ and the rank at $z^*_{(4)}$ of the differential of Γ_4 equals 3 (the dimension of $\mathscr{M}$), then looking at eqs (2.5.8), we get first $z_1^* + z_3^* = 0$, $(z_2^*)^2 z_3^*[z_3^* + 2z_1^*] = 0$ and $z_2^* + z_4^* = 0$, thus $z^*_{(4)}$

is necessarily of the form $(0, z_2^*, 0, -z_2^*)$ or $(z_1^*, 0, -z_1^*, 0)$. Viewing now Γ_4 as a map $\mathbb{C}^4 \to \mathbb{C}^3_{(z,w,\zeta)}$, and computing its 3×4 Jacobian matrix at such points, one sees that it is of rank 2, which proves the claim.

2.5.9. Segre geometry in the formal category. Replacing the complex defining equations (2.1.15) by purely formal power series, the reader may verify that all the previous results are meaningful and may be expressed in terms of purely formal power series.

§2.6. Extrinsic complexification of CR orbits

2.6.1. Intrinsic CR orbits and their smoothness. On M the complex tangent bundle T^cM is generated by the $2m$ sections $\operatorname{Re} L_1, \operatorname{Im} L_1, \dots, \operatorname{Re} L_m, \operatorname{Im} L_m$. In the formal case, their flow is formal. In the analytic case, their flow is analytic. However, a very subtle point occurs in the algebraic category. We have seen that the complex flows of the complexified vector fields $\mathscr{L}_k$, given by (2.4.2) and (2.4.3), are algebraic. This is untrue about the real flows of the real and imaginary parts of the vector fields L_k, as shows the following example.

Example 2.6.2. Let M be the real analytic hypersurface passing through the origin in $\mathbb{C}^2$ defined by $\operatorname{Im} w = \sqrt{1 + z\bar{z}} - 1$. The vector field $\overline{L} := \partial_{\bar{z}} + iz(1 + z\bar{z})^{-1/2}\, \partial_{\bar{w}}$ generates $T^{0,1}M$. Its real and imaginary parts are given by

(2.6.3)
$$\begin{cases} 2 \operatorname{Re} \overline{L} = \partial_x - y(1 + x^2 + y^2)^{-1/2}\, \partial_u + x(1 + x^2 + y^2)^{-1/2}\, \partial_v, \\ 2 \operatorname{Im} \overline{L} = -\partial_y + x(1 + x^2 + y^2)^{-1/2}\, \partial_u + y(1 + x^2 + y^2)^{-1/2}\, \partial_v. \end{cases}$$

We claim that the flow of $2 \operatorname{Re} \overline{L}$ is not algebraic. Indeed, let s denote a real time parameter and let $(x(s), y(s), u(s), v(s))$ be the unique integral curve of $2 \operatorname{Re} \overline{L}$ with $x(0) = x_0$, $y(0) = y_0$, $u(0) = u_0$ and $v(0) = v_0$ with $(x_0 + iy_0, u_0 + iv_0) \in M$. We compute first $x(s) = x_0 + s$, $y(s) = y_0$, $v(s) = (1 + y_0^2 + (x_0 + s)^2)^{1/2} - 1$ and then $u(s)$ satisifies the ordinary differential equation

$$du(s)/ds = -y_0(1 + y_0^2(x_0 + s)^2)^{-1/2}, \tag{2.6.4}$$

which may be integrated as

$$u(s) = u_0 - y_0 \left[\operatorname{Arcsh} \left(\frac{x_0 + s}{\sqrt{1 + y_0^2}} \right) - \operatorname{Arcsh} \left(\frac{x_0}{\sqrt{1 + y_0^2}} \right) \right] \tag{2.6.5}$$

Consequently, the flow of $2 \operatorname{Re} \overline{L}$ is not algebraic. However, *we stress that the complex flow of the complexified vector field* $\underline{\mathscr{L}} = \partial_\zeta + iz(1 + z\zeta)^{-1/2}\, \partial_\xi$ *is complex algebraic*, as shown by the general expression (2.4.3), which yields in this particular case $\underline{\mathscr{L}}_\zeta(z_p, w_p, \zeta_p, \xi_p) = (z_p, w_p, \zeta_p + \zeta, w_p + 2i(\sqrt{1 + z\zeta} - 1)))$: indeed, this expression is clearly algebraic !

We now consider the set $\mathbb{L} := \{\mathrm{Re}\, L_1, \mathrm{Im}\, L_1, \ldots, \mathrm{Re}\, L_m, \mathrm{Im}\, L_m\}$ of $2m$ real vector fields generating T^cM. Applying Theorem 2.4.10, we may construct the *local CR orbits of points* p *in* M, which we denote by $\mathscr{O}_{CR}(M,p)$. Since they are weak T^cM-integral manifolds, they are of the same CR dimension as M. According to Example 2.6.2 just above, we only know that $\mathscr{O}_{CR}(M,p)$ is a real analytic submanifold passing through p. Algebraicity seems to be lost, but naturally, according to Leibniz' principle of sufficient reason, one expects however that $\mathscr{O}_{CR}(M,p)$ is algebraic if M is algebraic

The above Example 2.6.2 shows that the algebraicity of the CR orbits of a real algebraic generic manifold cannot be established by means of sections of the complex tangent bundle $T^cM = \mathrm{Re}\, T^{0,1}M$. Fortunately, by passing to the extrinsic complexification, we may avoid this difficulty.

Theorem 2.6.6. *There is a one-to-one correspondence between the CR orbits and their extrinsic complexifications, namely for all* p *in a neighborhood of the origin, we have* :

(1) $\mathscr{O}_{CR}(M,p)^c = \mathscr{O}_{\mathscr{L},\underline{\mathscr{L}}}(\mathscr{M}, p^c)$, *and*
(2) $\mathscr{O}_{CR}(M,p) = \pi_t(\underline{\Lambda} \cap \mathscr{O}_{\mathscr{L},\underline{\mathscr{L}}}(\mathscr{M}, p^c))$,

where we remind the notation $p^c = (p, \bar{p}) \in \mathbb{C}^n \times \mathbb{C}^n$. *In particular, if* M *is a real algebraic generic submanifold, the complexified orbit* $\mathscr{O}_{\mathscr{L},\underline{\mathscr{L}}}(\mathscr{M}, p^c)$ *is complex algebraic, whence by* **(2)** *the CR orbit* $\mathscr{O}_{CR}(M,p)$ *is real algebraic.*

Proof. By Theorem 2.4.10, $\mathscr{O}_{CR}(M,p)$ is a real analytic closed submanifold of M passing through p. Even if M is real analytic, the flows of elements of $\mathbb{L}$ are not algebraic in general, as shows Example 2.6.2, so we do not know more than the analyticity of $\mathscr{O}_{CR}(M,p)$. Thus, let $\mathscr{O}$ be a small open connected manifold-piece of $\mathscr{O}_{CR}(M,p)$ through p, and let $\mathscr{O}^c$ be its extrinsic complexification. Because $L_k|_{\mathscr{O}}$ and $\bar{L}_k|_{\mathscr{O}}$ are tangent to $\mathscr{O}$, the *generic uniqueness principle* (*via* $\mathscr{O} \subset \underline{\Lambda}$, where $\underline{\Lambda}$ is maximally real, so $\mathscr{O}$ is generic in $\mathscr{O}^c$) entails that $\mathscr{L}_k|_{\mathscr{O}^c}$ and $\underline{\mathscr{L}}_k|_{\mathscr{O}^c}$ are tangent to $\mathscr{O}^c$. Therefore $\mathscr{O}^c$ is an integral manifold for $\{\mathscr{L}, \underline{\mathscr{L}}\}$ through p^c, whence $\mathscr{O}^c \supset \mathscr{O}_{\mathscr{L},\underline{\mathscr{L}}}(\mathscr{M}, p^c)$, since a characterizing property of the orbit $\mathscr{O}_{\mathscr{L},\underline{\mathscr{L}}}(\mathscr{M}, p^c)$ is to say that it is the *smallest integral manifold-piece* for $\{\mathscr{L}, \underline{\mathscr{L}}\}$ through p^c.

Conversely, Let $\mathscr{N}$ be a manifold-piece of $\mathscr{O}_{\mathscr{L},\underline{\mathscr{L}}}(\mathscr{M}, p^c)$ through p^c. We have just shown that $\mathscr{N} \subset \mathscr{O}^c$, hence to finish the proof, we want to show that $\mathscr{N} \supset \mathscr{O}^c$. We claim that we have $\sigma(\mathscr{N}) = \mathscr{N}$ in a neighborhood of p^c. Indeed, By definition, the orbit is the following set of endpoints of concatenations of flows of $\mathscr{L}$ and of flows of $\underline{\mathscr{L}}$ (notice that because $\mathscr{L}_{z_2} \circ \mathscr{L}_{z_1} = \mathscr{L}_{z_1+z_2}$ and $\underline{\mathscr{L}}_{\zeta_2} \circ \underline{\mathscr{L}}_{\zeta_1} = \underline{\mathscr{L}}_{\zeta_1+\zeta_2}$ but $\mathscr{L}$ and $\underline{\mathscr{L}}$ do not commute, there can be only two different kinds of concatenated flow maps ;

we do not use the abbreviated notation Γ_k here) :

(2.6.7)

$$\begin{cases} \mathscr{O}_{\mathscr{L},\underline{\mathscr{L}}}(\mathscr{M},p^c) = \{\mathscr{L}_{z_k}\circ\cdots\circ\mathscr{L}_{z_2}\circ\underline{\mathscr{L}}_{\zeta_1}\circ\mathscr{L}_{z_1}(p^c) : \\ \qquad\qquad : z_1,\zeta_1,z_2,\ldots,z_k\in\mathbb{C}\text{ small}, k\in\mathbb{N}\}\bigcup \\ \qquad \bigcup\{\underline{\mathscr{L}}_{\zeta_k}\circ\cdots\circ\underline{\mathscr{L}}_{\zeta_2}\circ\mathscr{L}_{z_1}\circ\underline{\mathscr{L}}_{\zeta_1}(p^c) : \\ \qquad\qquad : \zeta_1,z_1,\zeta_2,\ldots,\zeta_k\in\mathbb{C}\text{ small}, k\in\mathbb{N}\} := E\cup F. \end{cases}$$

Now an examination of (2.4.2) and (2.4.3) shows that we have $\sigma(\mathscr{L}_w(q)) = \underline{\mathscr{L}}_{\bar{w}}(\sigma(q))$ and $\sigma(\underline{\mathscr{L}}_\zeta(q)) = \mathscr{L}_{\bar{\zeta}}(\sigma(q))$, for each $q\in\mathscr{M}$. Consequently :

(2.6.8)

$$\begin{cases} \sigma(\mathscr{L}_{z_k}\circ\underline{\mathscr{L}}_{\zeta_{k-1}}\circ\cdots\circ\mathscr{L}_{z_1}(p^c)) = \underline{\mathscr{L}}_{\bar{w}_k}(\sigma(\underline{\mathscr{L}}_{\zeta_{k-1}}\circ\cdots\circ\mathscr{L}_{z_1}(p^c))) = \\ = \underline{\mathscr{L}}_{\bar{w}_k}\circ\mathscr{L}_{\bar{\zeta}_{k-1}}\circ\cdots\circ\sigma(\mathscr{L}_{z_1}(p^c)) = \underline{\mathscr{L}}_{\bar{w}_k}\circ\mathscr{L}_{\bar{\zeta}_{k-1}}\circ\cdots\circ\underline{\mathscr{L}}_{\bar{w}_1}(p^c), \end{cases}$$

since $\sigma(p^c) = p^c$. This proves $F = \sigma(E)$, hence $\sigma(\mathscr{O}_{\mathscr{L},\underline{\mathscr{L}}}(\mathscr{M},p^c)) = \mathscr{O}_{\mathscr{L},\underline{\mathscr{L}}}(\mathscr{M},p^c)$, so we have $\sigma(\mathscr{N}) = \mathscr{N}$ as announced. By Theorem 2.4.10, $\mathscr{N}$ is smooth at p^c and satisfies $\sigma(\mathscr{N}) = \mathscr{N}$. To conclude, we need the following lemma.

Lemma 2.6.9. *There is a one-to-one correspondence between real analytic subsets $\Sigma\subset M$ and complex analytic subvarieties Σ_1 of $\mathscr{M}$ satisfying $\sigma(\Sigma_1) = \Sigma_1$ given by $\Sigma\mapsto\Sigma^c =: \Sigma_1$, with inverse $\Sigma_1\mapsto\pi_t(\Sigma_1\cap\underline{\Lambda}) =: \Sigma$. Furthermore, Σ is a smooth submanifold if and only if Σ_1 is smooth.*

Proof. Let $\Sigma\subset M$ be given by real analytic equations $\chi_l(t,\bar{t}) = 0$, $l = 1,\ldots,c$. If Σ is smooth, we can assume that $d\rho_1\wedge\cdots\wedge d\rho_d\wedge d\chi_1\wedge\cdots\wedge d\chi_l(0)\neq 0$. Let $\Sigma^c\subset\mathscr{M}$ be defined by $\chi_l(t,\tau) = 0$. Clearly, Σ^c is again smooth and $\Sigma = \pi_t(\Sigma^c\cap\underline{\Lambda})$.

Conversely, let $\Sigma_1\subset\mathscr{M}$ be given by $\chi_l(t,\tau) = 0$, $l = 1,\ldots,c$. If Σ_1 is smooth, we can assume that $d\rho_1\wedge\cdots\wedge d\rho_d\wedge d\chi_1\wedge\cdots\wedge d\chi_l(0)\neq 0$. By assumption, Σ_1 is σ-invariant, *i.e.* we have $\chi_l(t,\tau) = 0$, $l = 1,\ldots,c$ if and only if $\chi_l(\bar{\tau},\bar{t}) = 0$, $l = 1,\ldots,c$. This implies that if we set $\Sigma := \{t\in M : \chi_l(t,\bar{t}) = 0,\ l = 1,\ldots,c\} = \pi_t(\Sigma_1\cap\underline{\Lambda})$, then Σ is real, *i.e.* satisfies $t\in\Sigma$ if and only if $\bar{t}\in\Sigma$ and satisfies $(\Sigma)^c = \Sigma_1$. Finally, Σ is smooth if Σ_1 is. $\square$

Continuing the proof of Theorem 2.6.6, we now know that there exists $N := \pi_t(\mathscr{N}\cap\underline{\Lambda})$ a unique piece of a real analytic submanifold $N\subset M$ passing through p such that $N^c = \mathscr{N}$.

Let us denote $\mathscr{N} = \{\rho(t,\tau) = 0, \chi(t,\tau) = 0\}$, so that $N = \{\rho(t,\bar{t}) = 0, \chi(t,\bar{t}) = 0\}$. Then $\mathscr{L}_k\rho = 0$, $\underline{\mathscr{L}}_k\rho = 0$, $\mathscr{L}_k\chi = 0$, $\underline{\mathscr{L}}_k\chi = 0$ on $\{\rho = \chi = 0\}$, since $\mathscr{N}$ is an $\{\mathscr{L},\underline{\mathscr{L}}\}$-integral manifold. Therefore, after restriction to the antidiagonal $\{\tau = \bar{t}\} = \underline{\Lambda}$, we have $L_k\rho = 0$, $\bar{L}_k\rho = 0$, $L_k\chi = 0$ and $\bar{L}_k\chi = 0$ on $\{\rho(t,\bar{t}) = 0, \chi(t,\bar{t}) = 0\} = N$, so that N is an $\{L,\bar{L}\}$-integral manifold. Thus by the minimality property of CR-orbits, we have $N\supset\mathscr{O}$ as germs at p. By complexifying, we get $\mathscr{N}\supset\mathscr{O}^c$, as desired. $\square$

Thanks to Theorem 4, an equivalent definition of minimality is as follows (*cf.* Definition 2.4.8):

Definition 2.6.10. The generic submanifold M is called *minimal at* $p \in M$ if the CR orbit $\mathscr{O}_{CR}(M,p)$ is of maximal dimension equal to $\dim_{\mathbb{R}} M$.

2.6.11. Segre type of M. Now, let us define the maps $\psi^1(z_1) := \pi_t(\Gamma_1(z_1))$, $\psi^2(z_1,z_2) := \pi_\tau(\Gamma_2(z_1,z_2))$ and more generally:

(2.6.12)
$$\psi^{2j}(z_{(2j)}) := \pi_\tau(\Gamma_{2j}(z_{(2j)})) \quad \text{and} \quad \psi^{2j+1}(z_{(2j+1)}) := \pi_t(\Gamma_{2j+1}(z_{(2j+1)})).$$

Notice that by the definitions (2.4.2) and (2.4.3)), the action of the flow of $\mathscr{L}$ leaves unchanged the (ζ,ξ)-coordinates, and vice versa, the action of the flow of $\underline{\mathscr{L}}$ leaves unchanged the (z,w)-coordinates. Similarly also, we can define the maps $\underline{\psi}^k$ by $\underline{\psi}^{2j}(z_{(2j)}) := \pi_t(\underline{\Gamma}_{2j}(z_{(2j)}))$ and $\underline{\psi}^{2j+1}(z_{(2j+1)}) := \pi_\tau(\underline{\Gamma}_{2j+1}(z_{(2j+1)}))$. We need the following lemma (of course, a similar statement also holds with $\underline{\Gamma}_{k+2}$ and $\underline{\psi}^{k+1}$ instead):

Lemma 2.6.13. *For* $0 \le k \le \mu_0$, *we have*:

(2.6.14) $$m + \text{genrk}_{\mathbb{C}}(\psi^{k+1}) = \text{genrk}_{\mathbb{C}}(\Gamma_{k+2}) = 2m + e_3 + \cdots + e_k,$$

and $\text{genrk}_{\mathbb{C}}(\psi^{k+1}) = m + e_3 + \cdots + e_{\mu_0}$ *for* $k \ge \mu_0$.

Proof. For $k = 0$, we have $\psi^1(z_1) = (z_1, i\bar{\Theta}(z_1,0,0))$, whence $\text{genrk}_{\mathbb{C}}(\psi^1) = m$ obviously. Recall that, by (2.4.6), we have

(2.6.15) $$\Gamma_2(z_1,z_2) = \big(z_1,\, \overline{\Theta}(z_1,0,0),\, z_2,\, \Theta(z_2,z_1,\overline{\Theta}(z_1,0,0))\big)\,,$$

so $m + \text{genrk}_{\mathbb{C}}(\psi^1) = \text{genrk}_{\mathbb{C}}(\Gamma_2) = 2m$. More generally, for $k = 2j$, we have:

(2.6.16)
$$\begin{cases} \mathscr{L}_{z_{2j+1}}(\Gamma_{2j}(z_{(2j)})) = \mathscr{L}_{z_{2j+1}}(z(z_{(2j)}), w(z_{(2j)}), \zeta(z_{(2j)}), \xi(z_{(2j)})) \\ \qquad\qquad = \big(z_{2j+1} + z(z_{(2j)}),\, \bar{\Theta}(z_{2j+1} + z(z_{(2j)}), \zeta(z_{(2j)}), \xi(z_{(2j)})),\, \zeta(z_{(2j)}),\, \xi(z_{(2j)})\big)\,. \end{cases}$$

We choose the coordinates (z,ζ,ξ) on $\mathscr{M}$, whence we consider the map $\Gamma_{2j+1}(z_{(2j+1)})$ in (2.6.16) to have range in $\mathbb{C}^{2m+d}_{(z,\zeta,\xi)}$. It is then the map $(z_{(2j)}, z_{2j+1}) \mapsto \big(z_{2j+1} + z(z_{(2j)}), \zeta(z_{(2j)}),\, \xi(z_{(2j)})\big)$. It follows immediately that

(2.6.17)
$$\text{genrk}_{\mathbb{C}}(\Gamma_{2j+1}) = m + \text{genrk}_{\mathbb{C}}[z_{(2j)} \mapsto (\zeta(z_{(2j)}), \xi(z_{(2j)}))] = m + \text{genrk}_{\mathbb{C}}\psi^{2j}.$$

This completes the proof of Lemma 2.6.13. □

We now define the *Segre type of* M *at* $p \in M$ (not to be confused with μ_0) to be the smallest integer ν_0 satisfying $\text{genrk}_{\mathbb{C}}(\psi^{\nu_0}) = \text{genrk}_{\mathbb{C}}(\psi^{\nu_0+1})$. By (2.6.17), we readily observe that in fact, we have $\nu_0 = \mu_0 - 1$. The Segre type *of* M can be related to its CR orbits as will be explained in the next paragraph.

2.6.18. Intrinsic complexification of CR-orbits. By the *intrinsic complexification* N^{i_c} *of a real CR manifold* N, we understand the smallest complex algebraic or analytic manifold containing N in $\mathbb{C}^n$. It exists and satisfies $\dim_{\mathbb{C}} N^{i_c} = \mathrm{CRdim}\, N + \mathrm{Hcodim}\, N$ (*holomorphic codimension*, *cf.* §2.1.6). Let $\mathscr{O}$ denote a manifold-piece of $\mathscr{O}_{CR}(M,p)$ through p and let $\mathscr{O}^{i_c}$ be its *intrinsic complexification*, namely the smallest complex manifold of the ambient space $\mathbb{C}^n$ containing $\mathscr{O}$. By construction, the ranges of the ψ^{2j} are contained in $\mathbb{C}^n_\tau$, but we will prefer to work in $\mathbb{C}^n_t$ (although it is equivalent in principle to work in $\mathbb{C}^n_\tau$), hence we shall consider the $\underline{\psi}^{2j}$ instead. We can now establish that $\mathrm{genrk}_{\mathbb{C}}(\underline{\psi}^{\nu_0}) = \dim_{\mathbb{C}} \mathscr{O}^{i_c}$ and that the range of $\underline{\psi}^{2\nu_0}$ contains a manifold-piece of $\mathscr{O}^{i_c}$ through p.

Theorem 2.6.19. *There exist some points* $\underline{z}^*_{(2\nu_0)} \in \mathbb{C}^{m2\nu_0}$ *arbitrarily close to the origin and small neighborhoods* $\mathscr{V}^*$ *of* $\underline{z}^*_{(2\nu_0)}$ *in* $(\delta\Delta^m)^{2\nu_0}$ *such that we have*:

- **(j)** $\underline{\psi}^{2\nu_0}(\underline{z}^*_{(2\nu_0)}) = p$.
- **(k)** *The map* $\underline{\psi}^{2\nu_0}$ *is of constant rank* $m + e_3 + \cdots + e_{\mu_0}$ *in* $\mathscr{V}^*$.
- **(l)** $\underline{\psi}^{2\nu_0}(\mathscr{V}^*)$ *is a manifold-piece* $\mathscr{O}^{i_c}$ *of the intrinsically complexified CR orbit of* M *through* p.
- **(m)** $m + e_3 + \cdots + e_{\mu_0} = \dim_{\mathbb{C}} \mathscr{O}^{i_c} = \mathrm{CRdim}\, \mathscr{O} + \mathrm{Hcodim}\, \mathscr{O}$.

Proof. Recall that in view of Theorem 2.5.2, there exists $\underline{z}^*_{(2\mu_0-1)} \in (\delta\Delta^m)^{2\mu_0-1}$ with $\underline{\Gamma}_{2\mu_0-1}(\underline{z}^*_{(2\mu_0-1)}) = p^c$, such that $\underline{\Gamma}_{2\mu_0-1}$ is of rank $2m + e_3 + \cdots + e_{\mu_0}$ at $\underline{z}^*_{(2\mu_0-1)}$. Looking again at (2.6.17) (for $k = 2j+1$ odd, which we have not written, but the corresponding equation is similar), and using the chain rule, we deduce that $\underline{\psi}^{2\mu_0-2}$ is of rank $m+e_3+\cdots+e_{\mu_0}$ at the point $\underline{z}^*_{2\nu_0} := (\underline{z}^*_1, \ldots, \underline{z}^*_{2\mu_0-2})$ and that $\underline{\psi}^{2\nu_0}(\underline{z}^*_{(2\nu_0)}) = p$ (recall $\nu_0 = \mu_0 - 1$). This yields **(j)** and **(k)**. For reasons of dimension, we already know that $\dim_{\mathbb{C}} \mathscr{O}^{i_c}$ must be equal to $m + e_3 + \cdots + e_{\mu_0}$, since $\mathrm{CRdim}\, \mathscr{O} = m$ and $\dim_{\mathbb{C}} \mathscr{O}^c = m + \dim_{\mathbb{C}} \mathscr{O}^{i_c}$. This yields **(m)**. Finally, to deduce **(l)**, we claim that it can be observed that the range of $\underline{\psi}^{2\nu_0}$ is *a priori* contained in $\mathscr{O}^{i_c}$, and afterwards for dimensional reasons, the image $\underline{\psi}^{2\nu_0}(\mathscr{V}^*)$ will necessarily be a manifold-piece of $\mathscr{O}^{i_c}$ through p. To complete this observation, we introduce holomorphic coordinates $(z, w_1, w_2) \in \mathbb{C}^m \times \mathbb{C}^{e_3+\cdots+e_{\mu_0}} \times \mathbb{C}^{n-m-e_3-\cdots-e_{\mu_0}}$ vanishing at p in which the equation of $\mathscr{O}^{i_c}$ is $\{w_2 = 0\}$, which is possible. Using the assumption that $M \cap \{w_2 = 0\}$ is smooth and of CR dimension m, one shows that the equations of $\mathscr{M}$ can then be written in the form $w_1 = \overline{\Theta}_1(z, \zeta, \xi_1, \xi_2)$ and $w_2 = \overline{\Theta}_2(z, \zeta, \xi_1, \xi_2)]$ with $\overline{\Theta}_2(z, \zeta, \xi_1, 0) \equiv 0$. Then an inspection of the inductive construction of the maps $\underline{\Gamma}_k$ shows that they have range contained in $\{w_2 = 0, \xi_2 = 0\}$, whence the maps $\underline{\psi}_{2j}$ have range in $\{w_2 = 0\}$, as announced. The proof of Theorem 2.6.19 is complete. $\square$

Example 2.6.20. Looking at the map Γ_4 in (2.5.8), we see that the integer $2\nu_0 = 2\mu_0 - 2$ satisfying the assertions **(j)** and **(k)** of Theorem 2.6.19 is in general optimal.

§2.7. Segre chains and Segre sets in ambient space

2.7.1. Segre chains as k-th orbit chains of vector fields. In this section, we shall define certain subsets of $\mathscr{M}$ which are the images of the Segre chains Γ_k. These last results will close up our presentation of the general theory of Segre chains. Although we shall not use them in the sequel, their definition seems to be interesting geometrically speaking. Here is an illustration:

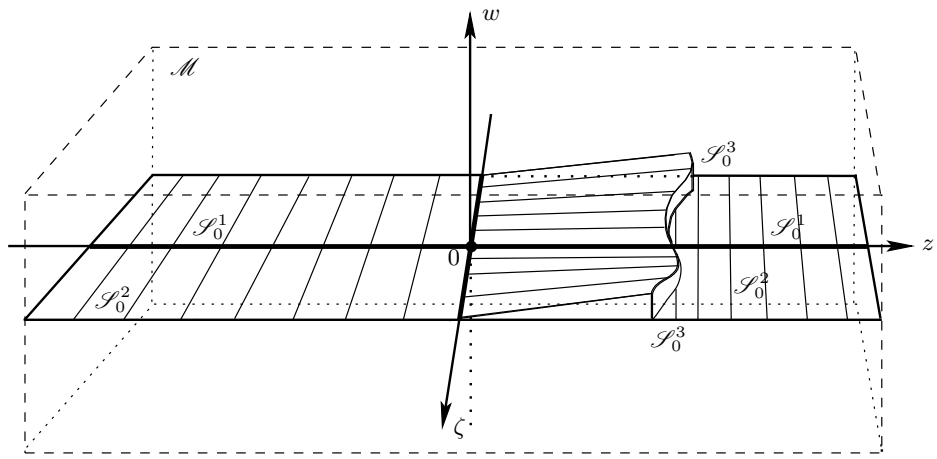

FIGURE 2.7.2: EMERGENCE OF SEGRE CHAINS

At first, we come back to the concatenated flow maps in (2.4.2) and (2.4.3). For each $k \in \mathbb{N}$, we choose in advance $\delta_k > 0$ so small that $[\mathscr{L} \text{ or } \underline{\mathscr{L}}]_{z_k}(\cdots(\mathscr{L}_{z_1}(p^c))\cdots)$ belongs to $\Delta_{2n}(\rho_1)$ for all $z_{(k)} \in \Delta_{mk}(\delta_k)$ and all $(t_p, \tau_p) \in \mathscr{M}$ with $(t_p, \tau_p) \in \Delta_{2n}(\rho_1/2)$. Looking at (2.5.2) and (2.5.3), we see that (up to a shrinking) the complexified Segre varieties of a point $(t_p, \tau_p) \in \mathscr{M}$ can be defined by $\mathscr{S}_{\tau_p} := \{\mathscr{L}_{z_1}(t_p, \tau_p) \in \Delta_{2n}(\rho_1) : z_1 \in \Delta_m(\delta_1)\}$ and $\underline{\mathscr{S}}_{t_p} := \{\underline{\mathscr{L}}_{z_1}(t_p, \tau_p) \in \Delta_{2n}(\rho_1) : z_1 \in \Delta_m(\delta_1)\}$. At order $k = 2$, we can define:

$$\text{(2.7.3)} \quad \begin{cases} \mathscr{S}^2_{\tau_p} = \{\underline{\mathscr{L}}_{z_2}(\mathscr{L}_{z_1}(t_p, \tau_p)) \in \Delta_{2n}(\rho_1) : (z_1, z_2) \in \Delta_{2m}(\delta_2)\}, \\ \underline{\mathscr{S}}^2_{t_p} = \{\mathscr{L}_{z_2}(\underline{\mathscr{L}}_{z_1}(t_p, \tau_p)) \in \Delta_{2n}(\rho_1) : (z_1, z_2) \in \Delta_{2m}(\delta_2)\}. \end{cases}$$

More generally, we want to define the sets $\mathscr{S}^k_{\tau_p}$ and $\underline{\mathscr{S}}^k_{t_p}$. By a slight abuse of language, we shall also call these sets the k-th *Segre chain* and the k-th *conjugate Segre chain.* Since we shall only use the mappings Γ_k and $\underline{\Gamma}_k$ and not their images, there will be no risk of confusion.

At first, we remind that, because only two "starting actions" $\mathscr{L}_{z_1}(t_p,\tau_p)$ and $\underline{\mathscr{L}}_{\zeta_1}(t_p,\tau_p)$ can make a difference in a concatenation of flows of $\mathscr{L}$ and of $\underline{\mathscr{L}}$, there can exist only two different families of k-th Segre chains. The precise definition of $\mathscr{S}^k_{\tau_p}$ and of $\mathscr{S}^k_{t_p}$ is as follows:

(2.7.4)
$$\begin{cases} \mathscr{S}^{2j}_{\tau_p} := \{\underline{\mathscr{L}}_{z_{2j}} \circ \cdots \circ \mathscr{L}_{z_1}(t_p,\tau_p) : (z_1,\dots,z_{2j}) \in \Delta_{2mj}(\delta_{2j})\}, \\ \mathscr{S}^{2j+1}_{\tau_p} := \{\mathscr{L}_{z_{2j+1}} \circ \cdots \circ \mathscr{L}_{z_1}(t_p,\tau_p) : (z_1,\dots,z_{2j+1}) \in \Delta_{2mj+m}(\delta_{2j+1})\}, \\ \underline{\mathscr{S}}^{2j}_{t_p} := \{\mathscr{L}_{z_{2j}} \circ \cdots \circ \underline{\mathscr{L}}_{z_1}(t_p,\tau_p) : (z_1,\dots,z_{2j}) \in \Delta_{2mj}(\delta_{2j})\}, \\ \underline{\mathscr{S}}^{2j+1}_{t_p} := \{\underline{\mathscr{L}}_{z_{2j+1}} \cdots \circ \underline{\mathscr{L}}_{z_1}(t_p,\tau_p) : (z_1,\dots,z_{2j+1}) \in \Delta_{2mj+m}(\delta_{2j+1})\}, \end{cases}$$

for $k = 2j$ or $k = 2j+1$, where $j \in \mathbb{N}$. Clearly, we have $\mathscr{S}^k_{\tau_p} \subset \mathscr{M}$ and $\underline{\mathscr{S}}^k_{t_p} \subset \mathscr{M}$. As $\sigma(\mathscr{L}_w(q)) = \underline{\mathscr{L}}_{\bar{w}}(\sigma(q))$, we have $\sigma(\mathscr{S}^k_{\tau_p}) = \underline{\mathscr{S}}^k_{\bar{t}_p}$.

2.7.5. Segre sets in ambient space. We can now define Segre sets in ambient space as certain projections of Segre chains. The following picture gives an idea of the definition of Segre sets as unions of Segre varieties in the case of a minimal hypersurface in $\mathbb{C}^2$.

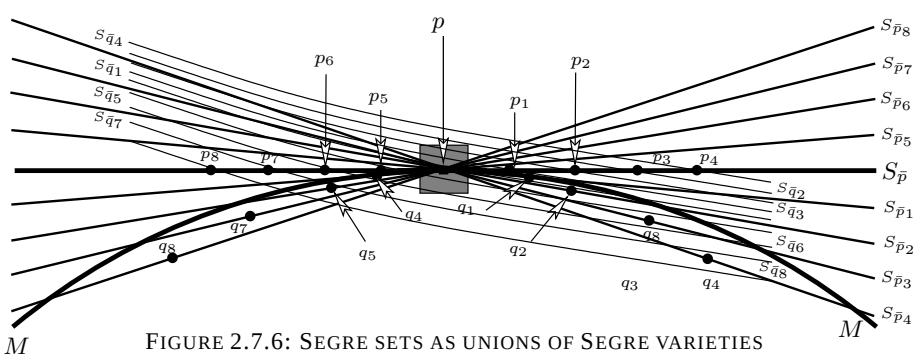

FIGURE 2.7.6: SEGRE SETS AS UNIONS OF SEGRE VARIETIES
$p \in M$, $p_1 \in S_{\bar{p}}, \dots, p_8 \in S_{\bar{p}}$, $q_1 \in S_{\bar{p}_1}, \dots, q_8 \in S_{\bar{p}_8}$

The sets $S^{2j+1}_{\bar{t}_p} := \pi_t(\mathscr{S}^{2j+1}_{\bar{t}_p}) \subset \Delta_n(\rho_1)$, $\overline{S}^{2j+1}_{t_p} := \pi_\tau(\underline{\mathscr{S}}^{2j+1}_{t_p}) \subset \Delta_n(\rho_1)$, $S^{2j}_{\bar{t}_p} := \pi_\tau(\mathscr{S}^{2j}_{\bar{t}_p}) \subset \Delta_n(\rho_1)$ and $\overline{S}^{2j}_{t_p} := \pi_t(\underline{\mathscr{S}}^{2j}_{t_p}) \subset \Delta_n(\rho_1)$ will be called the *k-th Segre sets and the k-th conjugate Segre sets*, with $k = 2j$ or $k = 2j+1$. Notice that by the definitions (2.4.2) and (2.4.3)), the action of the flow of $\mathscr{L}$ leaves unchanged the (ζ,ξ)-coordinates, and vice versa, the action of the flow $\underline{\mathscr{L}}$ leaves unchanged the (z,w)-coordinates. This is why in the definition of Segre sets, we alternately project in the $\mathbb{C}^n_t$-space and in the $\mathbb{C}^n_\tau$-space.

An equivalent, purely set-theoretic definition of Segre sets is as follows. We define: $S^0_{\bar{t}_p} := \{\bar{t}_p\}$, and $S^1_{\bar{t}_p} := S_{\bar{t}_p} = \bigcup_{\bar{t} \in S^0_{\bar{t}_p}} S_{\bar{t}}$, $S^2_{\bar{t}_p} = \bigcup_{t \in S^1_{\bar{t}_p}} \overline{S}_t$, and then inductively, for $j \in \mathbb{N}_*$, $S^{2j}_{\bar{t}_p} = \bigcup_{t \in S^{2j-1}_{\bar{t}_p}} \overline{S}_t$ and $S^{2j+1}_{\bar{t}_p} = \bigcup_{\bar{t} \in S^{2j}_{\bar{t}_p}} S_{\bar{t}}$. On the other hand, we also define $\overline{S}^0_{t_p} := \{t_p\}$, and $\overline{S}^1_{t_p} := \overline{S}_t = \bigcup_{t \in \overline{S}^0_{t_p}} \overline{S}_t$,

$\overline{S}^2_{t_p} := \bigcup_{\bar{t}\in\overline{S}^1_{t_p}} S_{\bar{t}}$, and inductively, for $j \in \mathbb{N}_*$, $\overline{S}^{2j}_{t_p} := \bigcup_{\bar{t}\in\overline{S}^{2j-1}_{t_p}} S_{\bar{t}}$, and $\overline{S}^{2j+1}_{t_p} = \bigcup_{t\in\overline{S}^{2j}_{t_p}} \overline{S}_t$. Finally, we mention the following two elementary properties:

(1) $\overline{S^k_{\bar{t}_p}} = \overline{S}^k_{t_p}$ and $S^k_{\bar{t}_p} = \overline{\overline{S}^k_{t_p}}$, $k \in \mathbb{N}$.

(2) $\overline{h}(S^{2j}_{\bar{t}_p}) = S'^{2j}_{\overline{h}(\bar{t}_p)}$, $h(S^{2j+1}_{\bar{t}_p}) = S'^{2j+1}_{\overline{h}(\bar{t}_p)}$, $h(\overline{S}^{2j}_{t_p}) = \overline{S}'^{2j}_{h(t_p)}$, $\overline{h}(\overline{S}^{2j+1}_{t_p}) = \overline{S}'^{2j+1}_{h(t_p)}$.

§2.8. Generic Segre multitype

2.8.1. Segre chains with varying base point. As before, let M be a connected generic real algebraic or analytic submanifold of $\mathbb{C}^n$. Let $p_0 \in M$. In a neighborhood of p_0, we can consider the pair of Segre foliations of the local complexification $\mathscr{M}$ of M. Let $p = (t_p, \tau_p) \in \mathscr{M}$. Identifying the point p_0 with the origin in some system of coordinates, we have denoted by $\Gamma_k(z_{(k)})$ the mapping $[\mathscr{L} \text{ or } \underline{\mathscr{L}}]_{z_k} \circ \cdots \circ \mathscr{L}_{z_1}(p_0, \bar{p}_0)$, namely the Segre chain with base point $(p_0)^c = (0,0) \in \mathbb{C}^n \times \mathbb{C}^n$. We want to let the base point vary, so we need a new notation. For $p = (t_p, \tau_p)$ in a neighborhood of $(p_0)^c$ in $\mathscr{M}$, we define

$$\Gamma_k(z_{(k)}, t_p, \tau_p) := [\mathscr{L} \text{ or } \underline{\mathscr{L}}]_{z_k} \circ \cdots \circ \mathscr{L}_{z_1}(t_p, \tau_p). \tag{2.8.2}$$

Similarly, we define $\underline{\Gamma}_k(z_{(k)}, t_p, \tau_p)$. In order to indicate the dependence of the Segre type with respect to p, we shall denote it by μ_p. Also, we shall denote the Segre multitype at p by $(m, m, e_{3,p}, \ldots, e_{\mu_p,p})$.

By Theorem 2.5.2., the generic rank of Γ_k stabilizes when $k \geq \mu_p$. We know that $\mu_p \leq d+2$ for all p in a neighborhood of p_0 and that the mapping $z_{(k)} \mapsto \Gamma_k(z_{(k)}, t_p, \tau_p)$ provides an open piece of the $\{\mathscr{L}, \underline{\mathscr{L}}\}$-orbit through $p \in \mathscr{M}$ for all $k \geq 2\mu_p - 1$. As $2\mu_p - 1 \leq 2d+3$, and as $2d+3 \leq 3(m+d) = 3n$, because $m \geq 1$ and $d \geq 1$ by assumption, we observe that the mapping $\Gamma_{3n}(z_{(3n)}, t_p, \tau_p)$ with the uniform integer $k = 3n$ suffices to construct the $\{\mathscr{L}, \underline{\mathscr{L}}\}$-orbits of all points p in a neighborhood of $(p_0)^c$ in $\mathscr{M}$.

Thanks to this observation and thanks to the algebraicity or the analyticity of the mapping $\Gamma_{3n}(z_{(3n)}, t_p, \tau_p)$, it is easy to see that there is a proper complex algebraic or complex analytic subvariety $\mathscr{E}$ of $\mathscr{M}$ with the property that the Segre type and multitype of $\mathscr{M}$ are constant at every point $p \in \mathscr{M} \backslash \mathscr{E}$. We shall denote these constants by $(m, m, e_{3,M}, \ldots, e_{\mu_M,M})$, where μ_M is the constant Segre type of $\mathscr{M}$ outside $\mathscr{E}$. In particular, the orbit dimension $2m + e_{1,M} + \cdots + e_{\mu_M,M}$ is constant in a neighborhood of p. Moreover, it also follows from the algebraicity or analyticity of the mappings $\Gamma_{3n}(z_{(3n)}, t_p, \tau_p)$ that the functions $p \mapsto \mu_p$ and $p \mapsto e_{3,p}, \ldots, p \mapsto e_{\mu_p,p}$ are lower semi-continuous. Finally, using the σ-invariance of the CR orbits of complexified points $p^c = (t_p, \bar{t}_p) \in \mathscr{M} \cap \underline{\Lambda}$, with $p \in M$, we get the

following theorem, which states that the Segre geometry possesses constant invariants over a Zariski open subset of M.

Theorem 2.8.3. *Let M be a connected real algebraic or analytic generic submanifold of $\mathbb{C}^n$ of codimension $d \geq 1$ and of CR dimension $m = n-d \geq 1$. Then there is a proper real algebraic or analytic subvariety E of M such that for every point $p \in M \backslash E$, the Segre type of M at p is constant equal to an integer $\nu_M = \mu_M - 1 \leq d+1$ and the Segre multitype of M at p is also constant equal to the multiplet $(m, e_{3,M}, \dots, e_{M,\mu_M})$. In particular, the CR-orbit dimension $\dim_{\mathbb{R}} \mathscr{O}_{CR}(M,p)$ is constant equal to $2m + e_{3,M} + \cdots + e_{\mu_M,M}$ for all $p \in M \backslash E$.*

We call μ_M the *generic Segre type of $\mathscr{M}$* and the multiplet $(m, m, e_{3,M}, \dots, e_{\mu_M,M})$ the *generic Segre multitype of $\mathscr{M}$*. Let

$$d_M := e_{3,M} + \cdots + e_{\mu_M,M}. \tag{2.8.4}$$

We call the integer $2m + d_M$ the *Zariski-generic orbit dimension* of M. We call the integer $d - d_M$ the *Zariski-generic orbit codimension* of M. Then using again the mapping $\Gamma_{3n}(z_{(3n)}, t_p, \tau_p)$, we can derive the following algebraic or analytic CR foliation theorem which shows that $d - d_M$ coincides with the Zariski-generic holomorphic codimension of the intrinsic complexification of CR orbits.

Corollary 2.8.5. *Let $p \in M \backslash E$ and set $d_{2,M} := d - e_{3,M} - \cdots - e_{\mu_M,M}$. Then a neighborhood of p in M is real algebraically or analytically foliated by CR orbits, namely there exist $d_{2,M}$ complex algebraic or analytic functions $h_1, \dots, h_{d_{2,M}}$ with $\partial h_1 \wedge \cdots \wedge \partial h_{d_{2,M}}(p) \neq 0$ such that*

- **(1)** *M is contained in $\{h_1 = \bar{h}_1, \dots, h_{d_{2,M}} = \bar{h}_{d_{2,M}}\}$. In other words, M is contained in a transverse intersection of $d_{2,M}$ Levi flat hypersurfaces in general position.*
- **(2)** *For every $c = (c_1, \dots, c_{d_{2,M}}) \in \mathbb{R}^{d_{2,M}}$, the manifold $M_c := M \cap \{h_1 = c_1, \dots, h_{d_{2,M}} = c_{d_{2,M}}\}$ is a CR orbit of M.*

Proof. Thanks to the mapping $\Gamma_{3n}(z_{(3n)}, t_p, \tau_p)$, we find real algebraic or analytic functions $h_1, \dots, h_{d_{2,M}}$ with linearly independent real differentials such that the level sets $\{h_1 = c_1, \dots, h_{d_{2,M}} = c_{d_{2,M}}\}$ are the CR orbits of M in a neighborhood of p. Since the functions $h_1, \dots, h_{d_{2,M}}$ are constant in each CR orbit, they are in particular trivially CR. By the Severi-Tomassini extension theorem, they extend complex algebraically or analytically to a neighborhood of p in $\mathbb{C}^n$. This proves the corollary. $\square$

Taking the functions $h_1, \dots, h_{d_{2,M}}$ as part of a system of complex coordinates and applying Theorem 2.1.32, we deduce:

Corollary 2.8.6. *For every point $p \in M \backslash E$, there exist complex algebraic or analytic local normal coordinates $(z, w_1, w_2) \in \mathbb{C}^m \times \mathbb{C}^{d-d_{2,M}} \times \mathbb{C}^{d_{2,M}}$ vanishing at p such that the complex defining equations of M are of the*

form

$$\begin{cases} 0 &= \bar{w}_2 - w_2, \\ 0 &= \bar{w}_1 - \Theta_1(\bar{z}, z, w_1, w_2), \end{cases} \tag{2.8.7}$$

where $\Theta_1(0, z, w_1, w_2) \equiv w_1$*, where for* $u_{2,q} \in \mathbb{R}^{d_{2,M}}$ *sufficiently small, the sets* $M \cap \{w_2 = u_{2,q} = ct.\}$ *coincide with the local CR orbit of the points* $q = (0, 0, u_{2,q}) \in M$ *and where the generic submanifold of* $\mathbb{C}^{m+d-d_{2,M}}$ *defined by the equations*

$$0 = \bar{w}_1 - \Theta_1(\bar{z}, z, w_1, u_{2,q}) \tag{2.8.8}$$

is minimal at $(z, w_1) = (0, 0)$ *for every* $u_{2,q}$*.*

§2.9. Local representation of nonminimal generic submanifolds

As a conclusion, we can now produce a general summary of important results which we will use constantly in the sequel. In advance, we formulate them in the most appropriate way for later use. As in Definition 2.1.44, let $M \subset \mathbb{C}^n$ be a local generic submanifold.

2.9.1. Minimal generic submanifolds. The following theorem is a corollary of Theorem 2.5.2 and Theorem 2.6.19 in the minimal case where $2m + e_2 + \cdots + e_{\mu_0} = 2m + d$. For later applications to the study of CR mappings, it is more convenient to state it with the conjugate Segre chain $\underline{\Gamma}_{2\nu_0}$.

Theorem 2.9.2. *If* M *is minimal at* p_0*, there exists a positive integer* $\nu_0 \leq d + 1$*, the Segre type of* M *at* p_0*, there exists an element* $\underline{z}^*_{(2\nu_0)} \in \mathbb{C}^{2m\nu_0}$ *arbitrarily close to the origin, there exists a* n*-dimensional complex affine subspace* H^* *passing through* $\underline{z}^*_{(2\nu_0)}$ *in* $\mathbb{C}^{2m\nu_0}$ *and there exists a complex affine parametrization* $s \mapsto \underline{z}_{(2\nu_0)}(s)$ *of* H^* *with* $\underline{z}_{(2\nu_0)}(0) = \underline{z}^*_{(2\nu_0)}$ *such that the mapping defined by composing the projection onto the first factor with the* $(2\nu_0)$*-th Segre chain, namely the mapping*

$$\mathbb{C}^n \ni s \longmapsto \pi_t(\underline{\Gamma}_{2\nu_0}(\underline{z}_{(2\nu_0)}(s))) \in \mathbb{C}^n \tag{2.9.3}$$

is of rank n *and vanishes at* $s = 0$*.*

We shall use this formulation very frequently in Part II of this memoir.

2.9.4. General generic submanifolds. In the case where M is not necessarily minimal, the holomorphic codimension in $\mathbb{C}^n$ of the local CR orbit $\mathscr{O}_{CR}(M, p_0)$ is an arbitrary integer d_2 with $0 \leq d_2 \leq d$ and $d_2 = 0$ if and only if M is minimal at p_0. We set $d_1 := d - d_2$, so $\mathscr{O}_{CR}(M, p_0)$ is of dimension $2m + d_1$. By Theorem 2.6.20, the intrinsic complexification $[\mathscr{O}_{CR}(M, p_0)]^{i_c}$ is a complex algebraic or analytic CR submanifold of $\mathbb{C}^n$ passing through p_0 which is of complex codimension d_2. After straightening it, we can assume that in coordinates $(z, w_1, w_2) \in \mathbb{C}^m \times \mathbb{C}^{d_1} \times \mathbb{C}^{d_2}$, it

coincides with $\{z_2 = 0\}$, so there are local defining equations for M of the form

$$\begin{cases} \bar{w}_{1,j_1} &= \Theta_{1,j_1}(\bar{z}, z, w_1, w_2), \quad j_1 = 1, \dots, d_1, \\ \bar{w}_{2,j_2} &= \Theta_{2,j_2}(\bar{z}, z, w_1, w_2), \quad j_2 = 1, \dots, d_2, \end{cases} \tag{2.9.5}$$

where $\Theta_{2,j_2}(\bar{z}, z, w_1, 0) \equiv 0$ and where the generic submanifold M_1 of $\mathbb{C}^{m+d_1}$ defined by

$$M_1 := M \cap \{w_2 = 0\} \tag{2.9.6}$$

is minimal at the origin, with Segre type equal to ν_0. Complexifying $(M)^c := \mathscr{M}$, we obtain the equations

$$\begin{cases} \xi_{1,j_1} &= \Theta_{1,j_1}(\zeta, z, w_1, w_2), \quad j_1 = 1, \dots, d_1, \\ \xi_{2,j_2} &= \Theta_{2,j_2}(\zeta, z, w_1, w_2), \quad j_2 = 2, \dots, d_2, \end{cases} \tag{2.9.7}$$

for $k = 1, \dots, m$ and the complexified $(1,0)$ vector fields

$$\begin{cases} \mathscr{L}_k := \dfrac{\partial}{\partial z_k} + \displaystyle\sum_{j_1=1}^{d_1} \dfrac{\partial \Theta_{1,j_1}}{\partial z_k}(\zeta, z, w_1, w_2) \dfrac{\partial}{\partial w_{1,j_1}} + \\ \qquad\qquad + \displaystyle\sum_{j_2=1}^{d_2} \dfrac{\partial \Theta_{2,j_2}}{\partial z_k}(\zeta, z, w_1, w_2) \dfrac{\partial}{\partial w_{2,j_2}}, \end{cases} \tag{2.9.8}$$

for $k = 1, \dots, m$ and the complexified $(1,0)$ vector fields

$$\begin{cases} \underline{\mathscr{L}}_k := \dfrac{\partial}{\partial \zeta_k} + \displaystyle\sum_{j_1=1}^{d_1} \dfrac{\partial \overline{\Theta}_{1,j_1}}{\partial \zeta_k}(z, \zeta, \xi_1, \xi_2) \dfrac{\partial}{\partial \xi_{1,j_1}} + \\ \qquad\qquad + \displaystyle\sum_{j_2=1}^{d_2} \dfrac{\partial \overline{\Theta}_{2,j_2}}{\partial \zeta_k}(z, \zeta, \xi_1, \xi_2) \dfrac{\partial}{\partial \xi_{2,j_2}}, \end{cases} \tag{2.9.9}$$

In the ambient space $\mathbb{C}^{2n}$ of the complexification $\mathscr{M}$, we shall denote the six coordinates in $\mathbb{C}^m \times \mathbb{C}^{d_1} \times \mathbb{C}^{d_2} \times \mathbb{C}^m \times \mathbb{C}^{d_1} \times \mathbb{C}^{d_2}$ by

$$(z, w_1, w_2, \zeta, \xi_1, \xi_2). \tag{2.9.10}$$

In $\mathbb{C}^{2n}$, the set

$$\mathscr{T} := \{(0, 0, w_2, 0, \Theta_1(0, 0, 0, w_2), \Theta_2(0, 0, 0, w_2), w_2)\} \tag{2.9.11}$$

is a transversal in $\mathscr{M}$ to the complexification $\mathscr{M}_1 := (M_1)^c$ given by

$$\mathscr{M}_1 : \quad w_2 = \xi_2 = 0, \qquad \xi_1 = \Theta_1(\zeta, w_1, 0), \tag{2.9.12}$$

namely we have $T_0\mathscr{M}_1 \oplus T_0\mathscr{T} = T_0\mathscr{M}$. Of course, this transversal depends on the choice of coordinates. To simplify a bit the expression of a choice of $\mathscr{T}$, we can (without loss of generality) assume that the coordinates (z, w_1, w_2) are normal, as described in Theorem 2.1.32, hence $\Theta_1(0, z, w_1, w_2) \equiv w_1$ and $\Theta_2(0, z, w_1, w_2) \equiv w_2$. Then

$$\mathscr{T} = \{(0, 0, w_2, 0, 0, w_2)\}. \tag{2.9.13}$$

With this choice, we may now generalize the definition of Segre chains by including the transversal parameter w_2 as follows. Firstly, for $z_{(1)} \in \mathbb{C}^m$, we set

(2.9.14)
$$\begin{cases} \underline{\Gamma}_1(z_{(1)} : w_2) := \underline{\mathscr{L}}_{z_1}(0,0,w_2,0,0,w_2) \\ \qquad\qquad\qquad = (0,0,w_2,z_1,\Theta_1(z_1,0,0,w_2),\Theta_2(z_1,0,0,w_2)). \end{cases}$$

Secondly, for $z_{(2)} = (z_1, z_2) \in \mathbb{C}^{2m}$, we set

$$\begin{cases} \underline{\Gamma}_2(z_{(2)} : w_2) & := \mathscr{L}_{z_2}(\Gamma_1(z_1 : w_2)), \\ \underline{\Gamma}_3(z_{(3)} : w_2) & := \underline{\mathscr{L}}_{z_3}(\underline{\Gamma}_2(z_{(2)} : w_2)), \end{cases} \tag{2.9.15}$$

and so on by induction. As a slight generalization of Theorem 2.5.2, we have the following theorem which describes the local Segre chain geometry in a neighborhood of an arbitrary point p_0 of M, without any nondegeneracy condition on M, in the most general setting.

Theorem 2.9.16. *If d_2 denotes the holomorphic codimension of the CR orbit of p_0 in $\mathbb{C}^n$ and if the coordinates $(z, w_1, w_2) \in \mathbb{C}^m \times \mathbb{C}^{d_1} \times \mathbb{C}^{d_2}$ are chosen such that $M_1 := M \cap \{w_2 = 0\}$ is the CR orbit of p_0, if the integer ν_0 with $\nu_0 \leq d_2 + 1$ denotes the Segre type of M at p_0, then there exists an element $\underline{z}^*_{(2\nu_0)} \in \mathbb{C}^{2m\nu_0}$ arbitrarily close to the origin, there exists a $(n - d_2)$-dimensional complex affine subspace H^* passing through $\underline{z}^*_{(2\nu_0)}$ in $\mathbb{C}^{2m\nu_0}$, there exists a complex affine parametrization $s \mapsto \underline{z}_{(2\nu_0)}(s)$ of H^* with $\underline{z}_{(2\nu_0)}(0) = \underline{z}^*_{(2\nu_0)}$ such that the projection of the conjugate Segre chains with origin the transversal $\mathscr{T}$ to the complexification $\mathscr{M}_1$, namely*

$$\mathbb{C}^{n-d_2} \times \mathbb{C}^{d_2} \ni (s, w_2) \longmapsto \pi_t(\underline{\Gamma}_{2\nu_0}(\underline{z}_{(2\nu_0)}(s) : w_2)) =: t \in \mathbb{C}^n \tag{2.9.17}$$

is of rank n and vanishes at $(s, w_2) = (0, 0)$.

In particular, if M is real algebraic or real analytic, if the local CR orbits of points p varying in a neighborhood of p_0 are all of holomorphic codimension equal to d_2, it follows from Corollary 2.8.6 that we can represent M in a neighborhood of p_0 by the equations

$$\begin{cases} \bar{w}_{1,j_1} & = \Theta_{1,j_1}(\bar{z}, z, w_1, w_2), \qquad & j_1 = 1, \ldots, d_1, \\ \bar{w}_{2,j_2} & = w_{2,j_2}, & j_2 = 1, \ldots, d_2, \end{cases} \tag{2.9.18}$$

where the last two equations represent the transversal intersection of d_2 Levi-flat hyperplanes in general position.

Corollary 2.9.19. *If M is real algebraic or analytic and if the orbit codimension is constant in a neighborhood of p_0, then for every $u_2 \in \mathbb{R}^{d_2}$ fixed, the image of the mapping*

$$\mathbb{C}^{n-d_2} \ni s \longmapsto \pi_t(\underline{\Gamma}_{2\nu_0}(\underline{z}_{(2\nu_0)}(s) : u_2)) =: t \in \mathbb{C}^n \tag{2.9.20}$$

covers a local piece of the intrinsic complexification of the CR orbit of the point in M with coordinates $(0, 0, u_2)$.

Chapter 3: Nondegeneracy conditions for generic submanifolds

§3.1. SEGRE MAPPING

3.1.1. Definition. Let M be a connected generic submanifold of $\mathbb{C}^n$ of codimension $d \geq 1$ and of CR dimension $m = n - d \geq 1$ and let $p_0 \in M$. As provided by Theorem 2.1.9, we choose coordinates $t = (t_1, \dots, t_n) = (z_1, \dots, z_m, w_1, \dots, w_d) \in \mathbb{C}^m \times \mathbb{C}^d$ vanishing at p_0 in which M is represented by the d complex defining equations

$$\bar{w}_j = \Theta_j(\bar{z}, t) = \Theta_j(\bar{z}, z, w), \qquad j = 1, \dots, d. \tag{3.1.2}$$

We remind that for every choice of coordinates (z, w) vanishing at p_0 such that $T^c_{p_0}M \cap (\{0\} \times \mathbb{C}^d_w) = \{0\}$, there exists a unique collection power series $\Theta_j(\bar{z}, t)$ such that M is represented by (3.1.2). Here, we shall assume that the powers series $\Theta_j(\bar{z}, z, w)$ are complex algebraic or analytic, namely they belong to $\mathscr{A}_{\mathbb{C}}\{\bar{z}, z, w\}$ or to $\mathbb{C}\{\bar{z}, z, w\}$. In this section, we shall only work at the central point p_0, which is the origin in these coordinates.

By developing the series $\Theta_j(\bar{z}, t)$ in powers of $\bar{z}$, we may write $\bar{w}_j = \sum_{\beta \in \mathbb{N}^m} \bar{z}^\beta \, \Theta_{j,\beta}(t)$. In terms of such a development, the *infinite Segre mapping of* M is defined to be the mapping

$$\mathscr{Q}_\infty : \ \mathbb{C}^n \ni t \longmapsto (\Theta_{j,\beta}(t))_{1 \leq j \leq d, \, \beta \in \mathbb{N}^m} \in \mathbb{C}^\infty. \tag{3.1.3}$$

Let $k \in \mathbb{N}$. For finiteness reasons, it is convenient to truncate this infinite collection and to define the *k-th Segre mapping of* M by

$$\mathscr{Q}_k : \ \mathbb{C}^n \ni t \longmapsto (\Theta_{j,\beta}(t))_{1 \leq j \leq d, \, |\beta| \leq k} \in \mathbb{C}^{N_{d,n,k}}, \tag{3.1.4}$$

where the integer $N_{d,n,k}$ denotes the number of k-th jets of a d-vectorial mapping of n independent variables $(t_1, \dots, t_n)$, namely $N_{d,n,k} = d \frac{(n+k)!}{n! \, k!}$. Let $k_2 \geq k_1$ and let π_{k_2,k_1} denote the canonical projection $\mathbb{C}^{N_{d,n,k_2}} \to \mathbb{C}^{N_{d,n,k_1}}$. Then we obviously have $\pi_{k_2,k_1}(\mathscr{Q}_{k_2}(t)) = \mathscr{Q}_{k_1}(t)$.

We shall see that these Segre mappings $\mathscr{Q}_k$ and $\mathscr{Q}_\infty$ are of utmost importance among the biholomorphically invariant objects attached to a real algebraic or analytic generic submanifold M.

3.1.5. Transformation of the Segre mapping under a change of coordinates. Apparently, the definition of the mappings $\mathscr{Q}_k$ strongly depends on the choice of coordinates and so the $\mathscr{Q}_k$ do not seem to represent an invariant analytico-geometric concept. However, we shall establish some canonical transformation rules which will show that all the definitions provided in this chapter are biholomorphically invariant.

The necessary ingredients for a biholomorphic transformation are as follows. Let $t' = h(t) = (h_1(t), \dots, h_n(t))$ be an invertible transformation, where the series $h_i(t)$ belong to $\mathscr{A}_{\mathbb{C}}\{t\}$ or to $\mathbb{C}\{t\}$, satisfy $h_i(0) = 0$ and $\det([\partial h_{i_1}/\partial t_{i_2}](0)_{1 \leq i_1, i_2 \leq n}) \neq 0$. Let $t = h'(t')$ denote the inverse mapping and split the mapping $h' = (f', g') = (f'_1, \dots, f'_m, g'_1, \dots, g'_d)$ according to

the splitting $t = (z, w)$ of the coordinates t. Furthermore, substitute t by $h'(t')$ and $\bar{t}$ by $\bar{h}'(\bar{t}')$ in (3.1.2), which yields

$$\bar{g}'_j(\bar{t}') = \Theta_j(\bar{f}'(\bar{t}'), h'(t')), \qquad j = 1, \dots, d. \tag{3.1.6}$$

If necessary, we renumber the coordinates in order that after splitting $t' = (z'_1, \dots, z'_m, w'_1, \dots, w'_d)$, after applying the algebraic or the analytic implicit function theorem, we can solve $\bar{w}'$ in terms of $(\bar{z}', z', w')$ in the following form which is analogous to (3.1.2):

$$\bar{w}'_j = \Theta'_j(\bar{z}', t') = \Theta'_j(\bar{z}', z', w'), \qquad j = 1, \dots, d. \tag{3.1.7}$$

This yields an algebraic or an analytic generic submanifold M' of $\mathbb{C}^n$. Finally, we develope these series in powers of $\bar{z}'$, which yields $\bar{w}'_j = \sum_{\beta \in \mathbb{N}^m} (\bar{z}')^\beta \, \Theta'_{j,\beta}(t')$, and we define the *transformed k-th Segre mapping of M'* by

$$\mathscr{Q}'_k : \ \mathbb{C}^n \ni t' \longmapsto (\Theta'_{j,\beta}(t'))_{1 \leq j \leq d, \, |\beta| \leq k} \in \mathbb{C}^{N_{d,n,k}}, \tag{3.1.8}$$

and we also define the *transformed infinite Segre mapping $\mathscr{Q}'_\infty$ of M'*. With such notations at hand, we can now state the following important transformation rules which we will prove in Section 3.6 below.

Theorem 3.1.9. *For every $j = 1, \dots, d$ and every $\beta \in \mathbb{N}^m$, there exists a mapping $R_{j,\beta}$ which is complex algebraic or analytic in its variables such that*

(3.1.10)
$$\begin{cases} \Theta'_{j,\beta}(h(t)) + \displaystyle\sum_{\gamma \in \mathbb{N}^m \setminus \{0\}} \frac{(\beta+\gamma)!}{\beta! \, \gamma!} \, (\bar{f}(0, \Theta(0,t)))^\gamma \, \Theta'_{j,\beta+\gamma}(h(t)) \equiv \\ \qquad\qquad\qquad\qquad \equiv Q_{j,\beta}(\{\Theta_{j_1,\beta_1}(t)\}_{1 \leq j_1 \leq d, \, |\beta_1| \leq |\beta|}). \end{cases}$$

Here, the left hand side is the power series developement of $\frac{1}{\beta!} \, [\partial^\beta_{\zeta'} \Theta'_{j,\beta}](\bar{f}(0, \Theta(0,t)), h(t))$. A collection of relations equivalent to the collection (3.1.10) *is as follows*

(7.1.11)
$$\begin{cases} \Theta'_{j,\beta}(h(t)) \equiv \displaystyle\sum_{\gamma \in \mathbb{N}^m} (-1)^\gamma \, \frac{(\beta+\gamma)!}{\beta! \, \gamma!} \, (\bar{f}(0, \Theta(0,t)))^\gamma \, Q_{j,\beta+\gamma}(\{\Theta_{j_1,\beta_1}(t)\}_{1 \leq j_1 \leq d, \, |\beta_1| \leq |\beta|+|\gamma|}) \\ \qquad\qquad \equiv R_{j,\beta}(\{\Theta_{j_1,\beta_1}(t)\}_{1 \leq j_1 \leq d, \, \beta_1 \in \mathbb{N}^m}). \end{cases}$$

for every $j = 1, \dots, d$ and every $\beta \in \mathbb{N}^m$.

Admitting this theorem, we shall verify in Section 3.3 below that every nondegeneracy condition on M which is defined in terms of the Segre mapping $\mathscr{Q}_\infty$ is invariant under changes of coordinates, namely such a condition is satisfied for $(M, \mathscr{Q}_\infty)$ if and only if it is satisfied for $(M', \mathscr{Q}'_\infty)$. First of all, we present five such nondegeneracy conditions.

3.2. Five pointwise nondegeneracy conditions

3.2.1. Levi nondegeneracy. To begin with, we shall say that M is *Levi nondegenerate at* p_0 if the first Segre mapping $\mathscr{Q}_1$ is of rank n at the origin.

We verify that this definition coincides with the usual one, firstly in the case $d = 1$. After diagonalizing the Hermitian matrix of its Levi form, a given hypersurface M passing through the origin in $\mathbb{C}^n$ may be represented by the equation $\bar{w} = w + i \sum_{k=1}^{r} \varepsilon_k \, |z_k| + \mathrm{O}(3)$, where $0 \leq r \leq n-1$ is the rank of the Levi form of M at the origin and where $\varepsilon_k = \pm 1$. Then $\mathscr{Q}_1(t) = (w, i\varepsilon_1 z_1, \dots, i\varepsilon_r z_r, 0, \dots, 0) + \mathrm{O}(2)$. Clearly, the rank of $\mathscr{Q}_1$ at 0 equals n if and only if $r = n-1$, as announced.

Secondly, in the case $d \geq 2$, a generic submanifold of codimension d may be represented by equations $\bar{w}_j = w_j + i \sum_{k_1,k_2=1}^{m} a_{j,k_1,k_2} \, z_{k_1} \, \bar{z}_{k_2} + \mathrm{O}(3)$, where $a_{j,k_1,k_2} = \overline{a_{j,k_2,k_1}} \in \mathbb{C}$. Introducing the Hermitian forms $\langle A_j(z), \bar{z} \rangle := \sum_{k_1,k_2=1}^{m} a_{j,k_1,k_2} \, z_{k_1} \, \bar{z}_{k_2}$, where the $A_j(z) = (\sum_{k_1=1}^{m} a_{j,k_1,1} \, z_{k_1}, \dots, \sum_{k_1=1}^{m} a_{j,k_1,m} \, z_{k_1})$ are complex linear endomorphisms of $\mathbb{C}^m$, we know by definition that M is Levi nondegenerate at the origin if and only if $\bigcap_{j=1}^{d} \operatorname{Ker} A_j = \{0\}$. On the other hand, we may write

$$\mathscr{Q}_1(t) = (w_j, iA_j(z))_{1 \leq j \leq d} + \mathrm{O}(2), \tag{3.2.2}$$

hence the rank of $\mathscr{Q}_1$ at the origin equals n if and only if $\bigcap_{j=1}^{d} \operatorname{Ker} A_j = \{0\}$ again. In conclusion, the two definitions of Levi nondegeneracy are equivalent.

Equivalently, we remind that Levi nondegeneracy of M can be expressed directly by means of a collection of d defining equations $r_1(t, \bar{t}) = \cdots = r_d(t, \bar{t}) = 0$ for M in a neighborhood of p_0, simply by the condition that the intersection of the kernels of the Levi forms of the defining functions $r_1, \dots, r_d$ at the origin reduces to $\{0\}$. In Lemma 3.2.6 below, this criterion is generalized.

3.2.3. Finite nondegeneracy. More generally, we shall say that M is *finitely nondegenerate at* p_0 if there exists an integer k such that the k-th Segre mapping $\mathscr{Q}_k$ is of rank n at the origin. Of course, this implies that $\mathscr{Q}_l$ is also of rank n for all $l \geq k$. If ℓ_0 denotes the smallest integer k such that $\mathscr{Q}_k$ is of rank n at the origin, we shall say that M is ℓ_0*-finitely nondegenerate at* p_0. Evidently, M is 1-finitely nondegenerate at p_0 if and only if it is Levi nondegenerate. For the moment, we shall admit that ℓ_0-nondegeneracy is independent of the choice of coordinates and of defining equations (this will be proved in Section 3.3 below and it follows in addition from the proof of Lemma 3.2.6 below). By the definition of $\mathscr{Q}_k$, the following characterization is immediate.

Lemma 3.2.4. *The generic submanifold M is ℓ_0-finitely nondegenerate at the origin if and only if there exists multiindices $\beta_*^1, \dots, \beta_*^n \in \mathbb{N}^m$ with $|\beta_*^i| \leq \ell_0$, $i = 1, \dots, n$, and integers $j_*^1, \dots, j_*^n$ with $1 \leq j_*^i \leq d$, $i =$*

$1, \dots, n$, *such that the rank at the origin of the mapping*

$$t \mapsto (\Theta_{j_*^1, \beta_*^1}(t), \dots, \Theta_{j_*^n, \beta_*^n}(t)) \tag{3.2.5}$$

is equal to n*, but such a property is impossible with multiindices satisfying* $|\beta_*^i| \leq \ell_0 - 1$.

Finite nondegeneracy of M at the origin can be expressed directly by means of a collection of d defining equations $r_1(t, \bar{t}) = \cdots = r_d(t, \bar{t}) = 0$ for M in a neighborhood of p_0. Indeed, let $\overline{L}_1, \dots, \overline{L}_m$ be a basis of $(0,1)$ vector fields tangent to M in a neighborhood of p_0. If $\beta = (\beta_1, \dots, \beta_m) \in \mathbb{N}^m$, we use the abbreviated notation $\overline{L}^\beta$ for the derivation of order $|\beta|$ defined by $\overline{L}_1^{\beta_1} \cdots \overline{L}_m^{\beta_m}$. Let $\nabla_t(r_j)(t, \bar{t})$ denote the complex gradient of $r_j(t, \bar{t})$, namely $([\partial r_j / \partial t_1](t, \bar{t}), \dots, [\partial r_j / \partial t_n](t, \bar{t}))$.

Lemma 3.2.6. *The generic submanifold* M *is* ℓ_0*-finitely nondegenerate at* p_0 *if and only if the complex linear span of all derivatives* $\overline{L}^\beta [\nabla_t(r_j)(t, \bar{t})]|_{t=p_0}$*, for* $|\beta| \leq \ell_0$ *and for* $1 \leq j \leq d$*, generates* $\mathbb{C}^n$*, a property which we may write symbolically as follows*

$$\mathrm{Span}_{\mathbb{C}}\{\overline{L}^\beta [\nabla_t(r_j)(t, \bar{t})]|_{t=0} : \beta \in \mathbb{N}^m, |\beta| \leq \ell_0, j = 1, \dots, d\} = \mathbb{C}^n, \tag{3.2.7}$$

but such a property cannot be satisfied with multiindices satisfying $|\beta| \leq \ell_0 - 1$.

Proof. Firstly, we can check directly that this new condition does not depend on the choice of a basis of $(0,1)$ vector fields tangent to M. Indeed, if $\overline{L}_1', \dots, \overline{L}_m'$ is another basis, there exists an invertible $m \times m$ matrix of power series $b(t, \bar{t})$ such that $\overline{L}_k' = \sum_{l=1}^m b_{k,l}(t, \bar{t}) \, \overline{L}_l$. Then computing $(\overline{L}')^\beta [\nabla_t(r_j)(t, \bar{t})]|_{t=0}$, we obtain a linear combination with constant coefficients of the vectors $(\overline{L})^{\beta_1} [\nabla_t(r_j)(t, \bar{t})]|_{t=0}$, where $|\beta_1| \leq |\beta|$. It follows that we have the inclusion relation

$$\begin{cases} \mathrm{Span}_{\mathbb{C}}\{\overline{L'}^\beta [\nabla_t(r_j)(t, \bar{t})]|_{t=0} : |\beta| \leq \ell_0, j = 1, \dots, d\} \subset \\ \subset \mathrm{Span}_{\mathbb{C}}\{\overline{L}^\beta [\nabla_t(r_j)(t, \bar{t})]|_{t=0} : |\beta| \leq \ell_0, j = 1, \dots, d\}. \end{cases} \tag{3.2.8}$$

As b is invertible, we can reverse the rôles of the vector fields $\overline{L}_k$ and of the vector fields $\overline{L}_k'$, which yields the opposite inclusion relation, hence an equality in (3.2.8).

Secondly, we verify that the new condition (3.2.7) neither depends on the choice of defining equations for M, nor on the choice of coordinates. This is a little bit tedious, but the principle of proof is also quite simple. Indeed, let $t' = h(t)$ be a change of coordinates with $h(0) = 0$ and assume that the image $M' := h(M)$ is represented by equations $r_1'(t', \bar{t}') = \cdots = r_d'(t', \bar{t}') = 0$. Equivalently, there exists an invertible $d \times d$ matrix $a(t, \bar{t})$ of complex algebraic or analytic power series such that $r'(h(t), \bar{h}(\bar{t})) \equiv a(t, \bar{t}) \, r(t, \bar{t})$. As we have already checked that the condition (3.2.7) does not depend on the choice of a basis of $(0,1)$ vector fields tangent to M', we

may choose the basis $\overline{L}'_k := (\bar{h})_*(\overline{L}_k)$, namely $\overline{L}'_k := \sum_{i=1}^n \overline{L}_k(\bar{h}_i)\,\partial_{\bar{t}'_i}$. If we denote the complex gradient $\nabla_t(r_j)$ by $([\partial r_j/\partial t_i](t,\bar{t}))_{1\le i\le n}$, we may compute the gradient of both sides of the vector identity $r'(h(t),\bar{h}(\bar{t})) \equiv a(t,\bar{t})\,r(t,\bar{t})$, which yields for $j=1,\dots,d$:

$$\text{(3.2.9)}\quad \begin{cases} \left(\displaystyle\sum_{i'=1}^n \frac{\partial h_{i'}}{\partial t_i}(t)\,\frac{\partial r'_j}{\partial t'_{i'}}(h(t),\bar{h}(\bar{t}))\right)_{1\le i\le n} \equiv \\ \equiv \left(\displaystyle\sum_{l=1}^d \frac{\partial a_{j,l}}{\partial t_i}(t,\bar{t})\,r_l(t,\bar{t}) + \sum_{l=1}^d a_{j,l}(t,\bar{t})\,\frac{\partial r_l}{\partial t_i}(t,\bar{t})\right)_{1\le i\le n}. \end{cases}$$

Next, we apply the derivations $(\overline{L})^\beta$ to this identity. Taking into account that the holomorphic terms are not differentiated, using the definition of $\overline{L}'_k$ and using the rule of Leibniz for the differentiation of a product, we get the following expression

(3.2.10)

$$\begin{cases} \left(\displaystyle\sum_{i'=1}^n \frac{\partial h_{i'}}{\partial t_i}(t)\,(\overline{L'}^\beta)\left(\frac{\partial r'_j}{\partial t'_{i'}}\right)(h(t),\bar{h}(\bar{t}))\right)_{1\le i\le n} \equiv \\ \equiv \left(\displaystyle\sum_{\gamma\le\beta} \frac{\beta!}{\gamma!\,(\beta-\gamma)!}\left(\sum_{l=1}^d \left(\overline{L}^\gamma\left(\frac{\partial a_{j,l}}{\partial t_i}\right)(t,\bar{t})\;\overline{L}^{\beta-\gamma}(r_l)(t,\bar{t}) + \right.\right.\right. \\ \left.\left.\left. + \overline{L}^\gamma(a_{j,l})(t,\bar{t})\;\overline{L}^{\beta-\gamma}\left(\frac{\partial r_l}{\partial t_i}\right)(t,\bar{t})\right)\right)\right)_{1\le i\le n}. \end{cases}$$

Here, for a multiindex $\gamma\in\mathbb{N}^m$, we write $\gamma\le\beta$ if $\gamma_k\le\beta_k$ for $k=1,\dots,m$. In this expression, we set $t=0$. Since the vector fields $\overline{L}_k$ are tangent to M, all the expressions $\overline{L}^{\beta-\gamma}(r_l)(0,0)$ in the right hand side vanish. Using the invertibility of the Jacobian matrix $(\partial h_{i'}/\partial t_i(0))_{1\le i,i'\le n}$, we then see that the vectors $\left((\overline{L'})^\beta\left(\partial r'_j/\partial t'_{i'}\right)(0,0)\right)_{1\le i'\le n}$ are linear combinations with constant coefficients of the vectors $\left((\overline{L}^{\beta_1})\,(\partial r_{j_1}/\partial t_i)\,(0,0)\right)_{1\le i\le n}$, where $j_1=1,\dots,d$ and $|\beta_1|\le|\beta|$. This entails that we have the inclusion relation

$$\text{(3.2.11)}\quad \begin{cases} \mathrm{Span}_{\mathbb{C}}\{(\overline{L'})^\beta[\nabla_{t'}(r'_j)(t',\bar{t}')]|_{t'=0} : |\beta|\le\ell_0,\ j=1,\dots,d\} \subset \\ \qquad \subset \mathrm{Span}_{\mathbb{C}}\{\overline{L}^\beta[\nabla_t(r_j)(t,\bar{t})]|_{t=0} : |\beta|\le\ell_0,\ j=1,\dots,d\}. \end{cases}$$

Let $t=h'(t')$ denote the inverse of $t'=h(t)$. Reasoning as above, we get the opposite inclusion relation, hence an equality in (3.2.11), as desired. We notice that the preceding reasoning also shows that for a fixed coordinate system, the condition (3.2.7) does not depend on the choice of d defining equations for M.

Finally, we check that this definition of finite nondegeneracy coincides with the first one given in the beginning of §3.2.3. As we have shown that the second definition of ℓ_0-finite nondegeneracy does not depend on the

choice of defining equations, we can assume that $r_j(t,\bar{t}) := \Theta_j(\bar{z},t) - \bar{w}_j$. Then $\nabla_t(r_j)(t,\bar{t}) = ([\partial\Theta_j/\partial t_1](\bar{z},t),\dots,[\partial\Theta_j/\partial t_n](\bar{z},t))$. We can also assume that the basis of $(0,1)$ vector fields tangent to M is the usual one, as in Chapter 2, which is given by $\overline{L}_k := \partial_{\bar{z}_k} + \sum_{j=1}^d \Theta_{j,\bar{z}_k}(\bar{z},t)\,\partial_{\bar{w}_j}$, for $k=1,\dots,m$. Then using the development $\Theta_j(\bar{z},t) = \sum_{\gamma\in\mathbb{N}^m}(\bar{z})^\gamma\,\Theta_{j,\gamma}(t)$, we may compute

$$\overline{L}^\beta[\nabla_t(r_j)(t,\bar{t})]|_{t=0} = \beta!\,([\partial\Theta_{j,\beta}/\partial t_1](0),\dots,[\partial\Theta_{j,\beta}/\partial t_n](0)). \tag{3.2.12}$$

As the right hand side coincides up to a nonzero factor with the (j,β)-th column of the Jacobian matrix of the Segre mapping $\mathscr{Q}_{\ell_0} : t \mapsto (\Theta_{j,\beta}(t))_{1\le j\le d,\,|\beta|\le\ell_0}$, we see immediately that $\mathscr{Q}_{\ell_0}$ is of rank n at the origin if and only if (3.2.7) holds. The proof of Lemma 3.2.6 is complete. $\square$

Example 3.2.13. We provide some elementary examples of finitely nondegenerate hypersurfaces at the origin:

(1) $\bar{w} = w + i[z^5\bar{z} + \bar{z}^5 z]$ in $\mathbb{C}^2$ is 5-finitely nondegenerate.
(2) $\bar{w} = w + i[z_1\bar{z}_1 + z_1^2\bar{z}_2 + \bar{z}_1^2 z_2]$ in $\mathbb{C}^3$ is 2-finitely nondegenerate.
(3) $\bar{w} = w + i[z_1\bar{z}_1 + z_1^2\bar{z}_2 + \bar{z}_1^2 z_2 + z_1^3\bar{z}_3 + \bar{z}_1^3 z_3]$ in $\mathbb{C}^4$ is 3-finitely nondegenerate.

More generally, let $\varphi_1(z),\dots,\varphi_m(z)$ be a collection of holomorphic functions vanishing at the origin in $\mathbb{C}^m$ such that the mapping $z \mapsto (\varphi_1(z),\dots,\varphi_m(z))$ is of rank m at the origin. Let $\psi_1(z),\dots,\psi_m(z)$ be an arbitrary collection of nonconstant holomorphic functions with different order of vanishing at 0 and let ℓ_0 be the highest order of vanishing of the ψ_k. Then the hypersurface

$$\bar{w} = w + i\left[\varphi_1(z)\overline{\psi_1(z)} + \overline{\varphi_1(z)}\psi_1(z) + \cdots + \varphi_m(z)\overline{\psi_m(z)} + \overline{\varphi_m(z)}\psi_m(z)\right] \tag{3.2.14}$$

is ℓ_0-finitely nondegenerate at the origin. On the contrary, $\bar{w} = w + iz^2\bar{z}^2$ is not finitely nondegenerate at the origin (it is in fact essentially finite, *see* §3.2.25 below).

Finite nondegeneracy of M is not a gratuitous generalization of the notion of Levi nondegeneracy, which would be simply something like a folklore "higher order Levi form". On the contrary, it will appear to be a very natural nondegeneracy condition. In particular, we shall establish that an arbitrary real algebraic or analytic generic submanifold M is, locally in a neighborhood of a Zariski-generic point $p \in M$, biholomorphic to a product $\underline{M}'_p \times \Delta^\kappa$ of finitely nondegenerate generic submanifold $\underline{M}'_p \subset \mathbb{C}^{n-\kappa}$ with a certain polydisc Δ^κ. This property says that up to neglecting the "flat part" Δ^κ, every real algebraic or analytic generic submanifold is finitely nondegenerate at a Zariski-generic point. Furthermore, some classical CR manifolds (as the tube over the two-dimensional light cone for instance), are Levi degenerate at every point, but are finitely nondegenerate.

Example 3.2.15. The tube over the two-dimensional light cone $\Gamma_{\mathbb{C}}$ in $\mathbb{C}^3$ is the singular hypersurface defined by $u^2 = x_1^2 + x_2^2$, where $u = \operatorname{Re} w$

and $x_k = \operatorname{Re} z_k$, $k = 1, 2$. We consider the regular part of $\Gamma_{\mathbb{C}}$, which coincides with $\Gamma_{\mathbb{C}} \cap \{(x_1, x_2) \neq (0, 0)\}$. In a neighborhood of the smooth point $(1, 0, 1)$, we check that $\Gamma_{\mathbb{C}}$ is Levi degenerate. The $(0, 1)$ vector fields tangent to $\Gamma_{\mathbb{C}}$ are generated by

$$\begin{cases} \overline{L}_1 := \dfrac{\partial}{\partial \bar{z}_1} + \dfrac{x_1}{u} \dfrac{\partial}{\partial \bar{w}}, \\ \overline{L}_2 := \dfrac{\partial}{\partial \bar{z}_2} + \dfrac{x_2}{u} \dfrac{\partial}{\partial \bar{w}}. \end{cases} \tag{3.2.16}$$

We observe that the dilatation vector field

$$\overline{T} := x_1 \frac{\partial}{\partial \bar{z}_1} + x_2 \frac{\partial}{\partial \bar{z}_2} + u \frac{\partial}{\partial \bar{w}}, \tag{3.2.17}$$

which coincides with $x_1 \overline{L}_1 + x_2 \overline{L}_2$ on M, lies in the kernel of the Levi form, since $[\overline{L}_1, T] = \frac{1}{2} L_1$ and $[\overline{L}_2, T] = \frac{1}{2} L_2$. We also observe that, according to [7], [11], $\Gamma_{\mathbb{C}}$ is necessarily foliated by complex curves. In fact, the regular locus of $\Gamma_{\mathbb{C}}$ is globally foliated by complex lines as follows: $z_1 := (r + is) \cos\theta + i\lambda$, $z_2 := (r + is) \sin\theta + i\mu$, $z_3 := r + is$, where $r, s, \theta, \lambda, \mu$ are real parameters. Finally, applying Lemma 3.2.6, we may check rapidly that $\Gamma_{\mathbb{C}}$ is 2-finitely nondegenerate at every point.

Example 3.2.18. A generalization of this example is the regular part M of M. Freeman's cubic $x_1^3 + x_2^3 - u^3 = 0$, *cf.* [11]. On $\{u \neq 0\}$, the $(0, 1)$ vector fields tangent to M are generated by

$$\begin{cases} \overline{L}_1 := \dfrac{\partial}{\partial \bar{z}_1} + \dfrac{x_1^2}{u^2} \dfrac{\partial}{\partial \bar{w}}, \\ \overline{L}_2 := \dfrac{\partial}{\partial \bar{z}_2} + \dfrac{x_2^2}{u^2} \dfrac{\partial}{\partial \bar{w}}. \end{cases} \tag{3.2.19}$$

Again, the dilatation vector field lies in the kernel of the Levi form, M is foliated by complex lines, but M is (2- or 3-) finitely nondegenerate at every point.

Example 3.2.20. Another example of everywhere Levi degenerate real algebraic hypersurface in $\mathbb{C}^3$ is the hypersurface M_0 defined in the domain $\{(z_1, z_2, w) \in \mathbb{C}^3 : |z_2| < 1\}$ by the equation

$$\bar{w} = w + i \left[\frac{2 z_1 \bar{z}_1 + z_1^2 \bar{z}_2 + \bar{z}_1^2 z_2)}{(1 - z_2 \bar{z}_2)} \right]. \tag{3.2.21}$$

The $(0, 1)$ vector fields tangent to M_0 are generated by

$$\begin{cases} \overline{L}_1 := \dfrac{\partial}{\partial \bar{z}_1} + i \left[\dfrac{2 z_1 + 2 \bar{z}_1 z_2}{1 - z_2 \bar{z}_2} \right] \dfrac{\partial}{\partial \bar{w}}, \\ \overline{L}_2 := \dfrac{\partial}{\partial \bar{z}_2} + i \left[\dfrac{(z_1 + \bar{z}_1 z_2)^2}{(1 - z_2 \bar{z}_2)^2} \right] \dfrac{\partial}{\partial \bar{w}}. \end{cases} \tag{3.2.22}$$

The kernel of the Levi form is generated by the vector field

$$\overline{T} := -\left[\frac{z_1+\bar{z}_1 z_2}{1-z_2\bar{z}_2}\right]\frac{\partial}{\partial \bar{z}_1}+\frac{\partial}{\partial \bar{z}_2}-i\left[\frac{(z_1+\bar{z}_1 z_2)^2}{(1-z_2\bar{z}_2)^2}\right]\frac{\partial}{\partial \bar{w}}. \tag{3.2.23}$$

Indeed, we compute:
(3.2.24)

$$[\overline{L}_1, T] = -\left(\frac{1}{1-z_2\bar{z}_2}\right) L_1, \qquad [\overline{L}_2, T] = -\left(\frac{z_1+\bar{z}_1 z_2}{(1-z_2\bar{z}_2)^2}\right) L_1.$$

Finally, according to [7], [11], M_0 is necessarily foliated by complex curves. In fact, M_0 is foliated by the complex lines $z_1 := z_0 - \bar{z}_0\zeta$, $z_2 := \zeta$, $w := -iz_0\bar{z}_0 + i\zeta\bar{z}_0^2 + \lambda$, where $z_0 \in \mathbb{C}$, $\lambda \in \mathbb{R}$ and where the complex variable $\zeta \in \mathbb{C}$ satisfies $|\zeta| < 1$. Finally, by a direct application of Lemma 3.2.4, we see that M_0 is 2-finitely nondegenerate at every point.

3.2.25. Essential finiteness. More generally, we shall say that M is *essentially finite at* p_0 if there exists an integer k such that the Segre mapping $\mathscr{Q}_k$ is locally finite in a neighborhood of the origin. Of course, this implies that $\mathscr{Q}_l$ is also locally finite for all $l \geq k$. Moreover, finite nondegeneracy implies trivially essential finiteness. For the moment, we shall admit that essential finiteness is independent of the choice of coordinates and of defining equations (this will be proved in Section 3.3.). We say that M is ℓ_0*-essentially finite at* p_0 if ℓ_0 is the smallest such integer. By D. Hilbert's Nullstellensatz, the following characterization is immediate.

Lemma 3.2.26. *The generic submanifold M is ℓ_0-essentially finite at the origin if and only if the complex algebraic or analytic set defined by*

$$\Theta_{j,\beta}(t) - \Theta_{j,\beta}(0) = 0, \quad j = 1, \dots, d, \ \ |\beta| \leq \ell_0, \tag{3.2.27}$$

is zero-dimensional at 0, but the same complex algebraic or analytic subset defined with $|\beta| \leq \ell_0 - 1$ is positive-dimensional at 0.

Classically, it is known that this property is equivalent to the fact that the ideal generated by the functions in the left hand side of (3.2.27) is of finite codimension in $\mathscr{A}_{\mathbb{C}}\{t\}$ or in $\mathbb{C}\{t\}$. More precisely, we define the integers ℓ_1 and ε_1 as follows: $\ell_1 \geq \ell_0$ is the smallest integer such that the ideal generated by all $\Theta_{j,\beta}(t) - \Theta_{j,\beta}(0)$ coincides with the ideal generated by the $\Theta_{j,\beta}(t) - \Theta_{j,\beta}(0)$ with $|\beta| \leq k$. This integer exists, by noetherianity of $\mathscr{A}_{\mathbb{C}}\{t\}$ or of $\mathbb{C}\{t\}$. Also, we define the integer ε_1 to be the codimension of the ideal $\langle \Theta_{j,\beta}(t) - \Theta_{j,\beta}(0)\rangle_{1\leq j\leq d,\, |\beta|\leq \ell_1}$ in $\mathscr{A}_{\mathbb{C}}\{t\}$ or in $\mathbb{C}\{t\}$. By essential finiteness, $\varepsilon_1 < \infty$. We shall also observe in Section 3.3 below that ε_1 is a biholomorphic invariant of M at p_0. We call ε_1 the *essential type of M at* p_0 and we denote it by $\operatorname{Ess\,Type}(M, p_0)$.

Essential finiteness of M at the origin can be expressed geometrically as follows. We introduce the locus of coincidence of Segre varieties

$$\mathbb{A}_{p_0} := \{t \in \Delta_n(\rho_1) : \ S_{\bar{t}} = S_{\bar{p}_0}\}. \tag{3.2.28}$$

Lemma 3.2.29. *The set $\mathbb{A}_{p_0}$ is a complex algebraic or analytic subset of a neighborhood of p_0 in $\mathbb{C}^n$ which is contained in M and which is described in local coordinates by $\mathbb{A}_{p_0} = \{t \in \Delta_n(\rho_1) : \Theta_{j,\beta}(t) = \Theta_{j,\beta}(0),\ j = 1, \dots, d,\ \beta \in \mathbb{N}^m\}$.*

Proof. Let $t \in \mathbb{A}_{p_0}$. Since $p_0 \in M$, we have $p_0 \in S_{\bar{p}_0}$ by Lemma 2.2.9. So $p_0 \in S_{\bar{t}}$, whence again by Lemma 2.2.9, $t \in S_{\bar{p}_0} = S_{\bar{t}}$, whence $t \in M$. This shows that $\mathbb{A}_{p_0}$ is contained in M. Next, in coordinates, we represent $S_{\bar{p}_0} = \{(z,w) \in \Delta_n(\rho_1) : w_j = \sum_{\beta \in \mathbb{N}^m} z^\beta \overline{\Theta}_{j,\beta}(0),\ j = 1, \dots, d\}$ and $S_{\bar{t}} = \{(z,w) \in \Delta_n(\rho_1) : w_j = \sum_{\beta \in \mathbb{N}^m} z^\beta \overline{\Theta}_{j,\beta}(\bar{t}),\ j = 1, \dots, d\}$. The two m-dimensional complex manifolds $S_{\bar{p}_0}$ and $S_{\bar{t}}$ coincide if and only if all the coefficients of their graphing functions coincide, namely $\overline{\Theta}_{j,\beta}(\bar{t}) = \overline{\Theta}_{j,\beta}(0)$ for all j and all β, which completes the proof. $\square$

Example 3.2.30. We provide some elementary examples of essentially finite hypersurfaces at 0.

(1) $\bar{w} = w + i[z^N \bar{z}^N]$ in $\mathbb{C}^2$ has essential type equal to N.

(2) $\bar{w} = w + i[z_1^3 \bar{z}_1^3 + z_2^4 \bar{z}_2^4]$ in $\mathbb{C}^3$ has essential type equal to 12.

More generally, let $\varphi_1(z), \dots, \varphi_m(z)$, be an arbitrary collection of holomorphic functions with

$$\dim \left(\mathbb{C}\{z\} / \langle (\varphi_k(z))_{1 \le k \le m} \rangle\right) =: \varepsilon_1 < \infty. \tag{3.2.31}$$

Then the essential type at the origin of $w = \bar{w} + i[\varphi_1(z)\overline{\varphi_1(z)} + \cdots + \varphi_m(z)\overline{\varphi_m(z)}]$ is equal to ε_1. On the contrary, the hypersurface $\bar{w} = w + i[z_1 \bar{z}_1 (1 + z_2 \bar{z}_2)]$ is not essentially finite at the origin (it is in fact Segre nondegenerate, *see* §3.2.32 just below).

3.2.32 Segre nondegeneracy. More generally, we shall say that M is *Segre nondegenerate at* p_0 if there exists an integer k such that the restriction to $S_{\bar{p}_0}$ of the k-th Segre mapping is of maximal possible generic rank equal to m:

$$\operatorname{genrk}_{\mathbb{C}} \left(S_{\bar{p}_0} \ni t \mapsto \mathscr{Q}_k(t)\right) = m, \tag{3.2.33}$$

which means more precisely that

$$\operatorname{genrk}_{\mathbb{C}} \left(z \mapsto \left(\Theta_{j,\beta}(z, \overline{\Theta}(z,0))_{1 \le j \le d,\, |\beta| \le k}\right)\right) = m. \tag{3.2.34}$$

We say that M is ℓ_0*-Segre nondegenerate at* p_0 if ℓ_0 is the smallest such integer. Then the following characterization is immediate

Lemma 3.2.35. *The generic submanifold M is ℓ_0-Segre nondegenerate at the origin if and only if there exist multiindices $\beta_*^1, \dots, \beta_*^m \in \mathbb{N}^m$ with $|\beta_*^k| \le \ell_0$, $k = 1, \dots, m$, and integers $j_*^1, \dots, j_*^m$ with $1 \le j_*^k \le d$, $k = 1, \dots, m$, such that the determinant*

$$\det \left(\left([L_{k_1} \Theta_{j_*^{k_2}, \beta_*^{k_2}}](z, \overline{\Theta}(z,0)) \right)_{1 \le k_1, k_2 \le m} \right) \tag{3.2.36}$$

does not vanish identically as a power series in z, but such a property is impossible for multiindices satisfying $|\beta_*^k| \le \ell_0 - 1$.

Example 3.2.37. Let $\varphi_1(z), \dots, \varphi_m(z)$ be a collection of holomorphic functions defined in a neighborhood of the origin $\mathbb{C}^m$ such that the generic rank of $z \mapsto (\varphi_1(z), \dots, \varphi_m(z))$ is equal to m. Then the hypersurface $\bar{w} = w + i[\varphi_1(z)\overline{\varphi_1(z)} + \cdots + \varphi_m(z)\overline{\varphi_m(z)}]$ is Segre nondegenerate at the origin. On the contrary, the real algebraic hypersurface M in $\mathbb{C}^3$ of equation

$$\operatorname{Im} w = \frac{|z_1|^2|1 + z_1\bar{z}_2|^2}{1 + \operatorname{Re}(z_1\bar{z}_2)} - \operatorname{Re} w \, \frac{\operatorname{Im}(z_1\bar{z}_2)}{1 + \operatorname{Re}(z_1\bar{z}_2)} \tag{3.2.38}$$

is not Segre nondegenerate at the origin (it is in fact holomorphically nondegenerate, *see* §3.2.40 just below). Indeed, solving with respect to $\bar{w}$, we may compute its complex defining equation, which yields

$$\bar{w} = -2i\, z_1\bar{z}_1(1 + z_1\bar{z}_2) + w\,(1 + z_1\bar{z}_2)/(1 + \bar{z}_1 z_2). \tag{3.2.39}$$

Then $S_{\bar{0}} = \{(z, 0)\}$ and the mappings $\mathscr{Q}_k|_{S_{\bar{0}}}$, for $k \geq 2$ are (up to zero terms) equal to $(z_1, z_2) \mapsto (-2iz_1, -2iz_1^2)$, hence of generic rank $1 < 2$.

3.2.40. Holomorphic nondegeneracy. More generally, we shall say that M is *holomorphically nondegenerate at* p_0 if there exists an integer k such that the k-th Segre mapping is of maximal generic rank equal to n. This means that

$$\operatorname{genrk}_{\mathbb{C}} \left(t \mapsto (\Theta_{j,\beta}(t))_{1 \leq j \leq d,\, |\beta| \leq k}\right) = n. \tag{3.2.41}$$

We say that M is ℓ_0-holomorphically nondegenerate at p_0 if ℓ_0 is the smallest possible such integer. Then the following characterization is immediate

Lemma 3.2.42. *The generic submanifold M is holomorphically nondegenerate at the origin if and only if there exist multiindices $\beta_*^1, \dots, \beta_*^n \in \mathbb{N}^n$ with $|\beta_*^i| \leq \ell_0$, $i = 1, \dots, n$, and integers $j_*^1, \dots, j_*^n$ with $1 \leq j_*^i \leq d$, $i = 1, \dots, n$, such that the determinant*

$$\det \left(\left(\frac{\partial \Theta_{j_*^{i_1}, \beta_*^{i_1}}}{\partial t_{i_2}}(t) \right)_{1 \leq i_1, i_2 \leq m} \right) \tag{3.2.43}$$

does not vanish identically as a power series in t, but such a property is impossible for multiindices satisfying $|\beta_*^i| \leq \ell_0 - 1$.

3.2.44. Links between the five nondegeneracy conditions. Finally, we shall establish the following hierarchy between the five nondegeneracy conditions presented in this chapter.

Theorem 3.2.45. *Let M be a real algebraic or analytic generic submanifold in $\mathbb{C}^n$ and let $p_0 \in M$. Then the following four implications hold:*

$$\begin{cases} \quad M \text{ is } \ell_0\text{-holomorphically nondegenerate at } p_0 \Longleftarrow \\ \Longleftarrow M \text{ is } \ell_0\text{-Segre nondegenerate at } p_0 \Longleftarrow \\ \Longleftarrow M \text{ is } \ell_0\text{-essentially finite at } p_0 \Longleftarrow \\ \Longleftarrow M \text{ is } \ell_0\text{-finitely nondegenerate at } p_0 \Longleftarrow \\ \Longleftarrow M \text{ is Levi nondegenerate at } p_0. \end{cases} \tag{3.2.46}$$

Proof. We prove the first implication, considering that the other three follow from known results in local complex analytic geometry (*see* especially Lemma 4.1.4 below). By specializing the functional equations (2.1.25), we obtain $\Theta(0, z, \overline{\Theta}(z, 0, 0)) \equiv 0$ and $w \equiv \overline{\Theta}(0, 0, \Theta(0, 0, w))$. Remind the notational coincidence $\Theta_{j,0}(z, w) \equiv \Theta_j(0, z, w)$. It follows that the mapping $(0, w) \mapsto (\Theta_{j,0}(0, w))_{1 \leq j \leq d}$ is already of rank d at the origin. Furthermore, the restriction to $S_{\bar{0}}$ of the zeroth Segre mapping is identically zero: $\mathscr{Q}_0(z, \overline{\Theta}(z, 0)) = (\Theta_{j,0}(z, \overline{\Theta}(z, 0)))_{1 \leq j \leq d} \equiv 0$.

Suppose now that M is ℓ_0-Segre nondegenerate, hence ℓ_0 is the smallest integer such that the generic rank of the mapping $z \mapsto (\Theta_{j,\beta}(z, \overline{\Theta}(z, 0))_{1 \leq j \leq d,\, 1 \leq |\beta| \leq \ell_0})$ is equal to m (notice that we have written $1 \leq |\beta| \leq \ell_0$ and not $|\beta| \leq \ell_0$). Let $k \in \mathbb{N}$ with $k \geq 1$. It follows immediately that the generic rank of the mapping

$$(3.2.47) \quad (z, w) \mapsto \big((\Theta_{j,0}(0, w))_{1 \leq j \leq d}, (\Theta_{j,\beta}(z, \overline{\Theta}(z, 0)))_{1 \leq j \leq d,\, 1 \leq |\beta| \leq k}\big)$$

is equal to n if only if $k \geq \ell_0$, hence M is ℓ_0-holomorphically nondegenerate. This completes the proof of Theorem 3.2.45. $\square$

3.2.48. Expression of the five nondegeneracy conditions in normal coordinates. Assume now that the coordinates (z, w) are normal, namely we have $\Theta_j(0, z, w) \equiv w_j$ and $\Theta_j(\bar{z}, 0, w) \equiv w_j$, *cf.* Theorem 2.1.32. It follows that in the development $\bar{w}_j = \sum_{\beta \in \mathbb{N}^m} (\bar{z})^\beta \, \Theta_{j,\beta}(t)$ of the defining equations of M, we have $\Theta_{j,0}(t) \equiv w_j$ and $\Theta_{j,\beta}(0) = 0$ for all j and all β. Then we can simplify a little bit the expression of the five nondegeneracy conditions, which is sometimes useful in applications.

Lemma 3.2.49. *In normal coordinates, we have the following characterizations:*

- **(1)** *M is Levi nondegenerate at the origin if and only if there exist multiindices $\beta_*^1, \dots, \beta_*^m \in \mathbb{N}^m$ with $|\beta_*^k| = 1$, $k = 1, \dots, m$, and integers $j_*^1, \dots, j_*^m$ with $1 \leq j_*^k \leq d$, $k = 1, \dots, m$, such that $\det \Big([\partial \Theta_{j_*^{k_1}, \beta_*^{k_1}} / \partial z_{k_2}](0)\Big)_{1 \leq k_1, k_2 \leq m} \neq 0$.*
- **(2)** *M is ℓ_0-finitely nondegenerate at the origin if and only if there exist multiindices $\beta_*^1, \dots, \beta_*^m \in \mathbb{N}^m$ with $|\beta_*^k| \leq \ell_0$, $k = 1, \dots, m$, and integers $j_*^1, \dots, j_*^m$ with $1 \leq j_*^k \leq d$, $k = 1, \dots, m$, such that $\det \Big([\partial \Theta_{j_*^{k_1}, \beta_*^{k_1}} / \partial z_{k_2}](0)\Big)_{1 \leq k_1, k_2 \leq m} \neq 0$, but such a property is impossible for multiindices β_*^k satisfying $|\beta_*^k| \leq \ell_0 - 1$.*
- **(3)** *M is essentially finite at the origin if and only if there exists an integer ℓ_0 such that the ideal generated by the $\Theta_{j,\beta}(z, 0)$ for $j = 1, \dots, d$ and $|\beta| \leq \ell_0$ is of finite codimension in $\mathscr{A}_{\mathbb{C}}\{z\}$ or in $\mathbb{C}\{z\}$, but the same ideal for $|\beta| \leq \ell_0$ is of infinite codimension.*
- **(4)** *M is Segre nondegenerate at the origin if and only if there exist multiindices $\beta_*^1, \dots, \beta_*^m \in \mathbb{N}^m$ with $|\beta_*^k| \leq \ell_0$, $k = 1, \dots, m$, and integers $j_*^1, \dots, j_*^m$ with $1 \leq j_*^k \leq d$, $k = 1, \dots, m$, such that*

$\det\Big([\partial\Theta_{j_*^{k_1},\beta_*^{k_1}}/\partial z_{k_2}](z,0)\Big)_{1\leq k_1,k_2\leq m} \not\equiv 0$ *in* $\mathscr{A}_{\mathbb{C}}\{z\}$ *or in* $\mathbb{C}\{z\}$, *but such a property is impossible for multiindices* β_*^k *satisfying* $|\beta_*^k|\leq \ell_0-1$.

(5) M *is holomorphically nondegenerate at the origin if and only if there exist multiindices* $\beta_*^1,\dots,\beta_*^m\in\mathbb{N}^m$ *with* $|\beta_*^k|\leq\ell_0$, $k=1,\dots,m$, *and integers* $j_*^1,\dots,j_*^m$ *with* $1\leq j_*^k\leq d$, $k=1,\dots,m$, *such that* $\det\Big([\partial\Theta_{j_*^{k_1},\beta_*^{k_1}}/\partial z_{k_2}](z,w)\Big)_{1\leq k_1,k_2\leq m}\not\equiv 0$ *in* $\mathscr{A}_{\mathbb{C}}\{z,w\}$ *or in* $\mathbb{C}\{z,w\}$, *but such a property is impossible for multiindices* β_*^k *satisfying* $|\beta_*^k|\leq\ell_0-1$.

Proof. Thanks to $\Theta_{j,0}(t)\equiv w_j$, we observe that the zero-th order Segre mapping already provides a rank d subset of power series. Then each one of the five characterizations may be checked easily. □

§3.3. Biholomorphic invariance

3.3.1. Finite nondegeneracy. Let $t'=h(t)$ be a change of coordinates centered at the origin and let $M':=h(M)$ as in §3.1.5. Our purpose is to verify that the above five nondegeneracy conditions are biholomorphically invariant. Then the following lemma is relatively crucial.

Lemma 3.3.2. *For every* $k\in\mathbb{N}$, *the ranks at the origin of the two Segre mappings* $t\mapsto\mathscr{Q}_k(t)$ *and* $t'\mapsto\mathscr{Q}'_k(t')$ *are equal.*

Proof. Let $\mathbf{1}_k=(0,\dots,0,1,0,\dots,0)\in\mathbb{N}^m$ denote the multiindex with 1 at the k-th place and zero elsewhere. By differentiating (3.1.10) with respect to t_i at $t_i=0$, we have the following relations for all $j=1,\dots,d$ and all $\beta\in\mathbb{N}^m$:

(3.3.3)
$$\begin{cases}\displaystyle\sum_{i'=1}^n\frac{\partial\Theta'_{j,\beta}}{\partial t'_{i'}}(0)\,\frac{\partial h_{i'}}{\partial t_i}(0)+\sum_{k=1}^m\sum_{l=1}^d(\beta_k+1)\,\frac{\partial\bar f_k}{\partial w_l}(0)\,\frac{\partial\Theta_{0,l}}{\partial t_i}(0)\,\Theta'_{j,\beta+\mathbf{1}_k}(0)=\\ \qquad\displaystyle=\sum_{j_1=1}^d\sum_{|\beta_1|\leq|\beta|}\frac{\partial Q_{j,\beta}}{\partial\Theta_{j_1,\beta_1}}(\{\Theta_{j_1,\beta_1}(0)\}_{1\leq j_1\leq d,\,|\beta_1|\leq|\beta|})\,\frac{\partial\Theta_{j_1,\beta_1}}{\partial t_i}(0).\end{cases}$$

Since the Jacobian matrix $([\partial h_{i'}/\partial t_i](0))_{1\leq i,i'\leq n}$ is invertible, we deduce immediately from this relation that each partial derivative $[\partial\Theta'_{j,\beta}/\partial t'_{i'}](0)$ is a linear combination with constant coefficients of the partial derivatives $[\partial\Theta_{j_1,\beta_1}/\partial t_i](0)$, with $i=1,\dots,n$, $j_1=1,\dots,d$ and $|\beta_1|\leq|\beta|$. Consequently, for all $k\in\mathbb{N}$, we have the following inequality

(3.3.4)
$$\mathrm{rk}_0\left(t'\mapsto(\Theta'_{j,\beta}(t'))_{1\leq j\leq d,\,|\beta|\leq k}\right)\leq\mathrm{rk}_0\left(t\mapsto(\Theta_{j,\beta}(t))_{1\leq j\leq d,\,|\beta|\leq k}\right).$$

Applying the same reasoning to the inverse transformation $t=h'(t')$, we also obtain the reverse inequality. In conclusion, we have the equality of

ranks

(3.3.5)
$$\mathrm{rk}_0\left(t' \mapsto (\Theta'_{j,\beta}(t'))_{1\leq j\leq d,\,|\beta|\leq k}\right) = \mathrm{rk}_0\left(t \mapsto (\Theta_{j,\beta}(t))_{1\leq j\leq d,\,|\beta|\leq k}\right),$$

which completes the proof of Lemma 3.3.2. □

In particular, it follows immediately that M is ℓ_0-finitely nondegenerate at p_0 if and only if M' is ℓ_0-finitely nondegenerate at $p'_0 = h(p_0)$. This proves that the definition given in §3.2.3 is invariant under complex algebraic or analytic changes of coordinates.

3.3.6. Levy multitype at the origin. More generally, since the ranks of the Segre mappings $\mathscr{Q}_k$ are invariant, we may introduce the successive invariant integers $\lambda_{k,0}$ such that the rank at the origin of $\mathscr{Q}_k$ equals $\lambda_{0,0}+\lambda_{1,0}+\cdots+\lambda_{k,0}$. Since the mapping $w \mapsto \Theta(0,0,w)$ is invertible, we have $\lambda_{0,0} = d$. Since M is ℓ_0-finitely nondegenerate at the origin, we have

$$d + \lambda_{1,0} + \cdots + \lambda_{\ell_0,0} = n. \tag{3.3.7}$$

If M is ℓ_0-finitely nondegenerate at p_0, we call the multiplet $(d, \lambda_{1,0}, \ldots, \lambda_{\ell_0,0})$ the *Levi multitype of M at p_0*.

3.3.8. Essential finiteness. Now, we check that essential finiteness is a biholomorphically invariant property. It suffices to prove the following lemma.

Lemma 3.3.9. *If $p'_0 = h(p_0)$, we have $h(\mathbb{A}_{p_0}) = \mathbb{A}'_{p'_0}$.*

Proof. Let $t \in \mathbb{A}_{p_0}$, namely $\Theta_{j,\beta}(t) = \Theta_{j,\beta}(0)$ for all $j = 1, \ldots, d$ and all $\beta \in \mathbb{N}^m$. The recipe is again to look at (3.1.10). As $\Theta_0(t) = \Theta_0(0) = 0$ and as $\bar{f}(0) = 0$, we obtain from (3.1.10)

$$\begin{cases} \Theta'_{j,\beta}(h(t)) \equiv R_{j,\beta}(\{\Theta_{j_1,\beta_1}(t)\}_{1\leq j_1\leq d,\,|\beta_1|\leq|\beta|}) \\ \qquad\qquad\quad \equiv R_{j,\beta}(\{\Theta_{j_1,\beta_1}(0)\}_{1\leq j_1\leq d,\,|\beta_1|\leq|\beta|}) \equiv \Theta'_{j,\beta}(h(0)), \end{cases} \tag{3.3.10}$$

so $h(t) \in \mathbb{A}'_{p'_0}$, where $p'_0 = h(p_0)$ is the origin in the coordinates t'. In other words, we have shown that $h(\mathbb{A}_{p_0}) \subset \mathbb{A}'_{p'_0}$. Since h is invertible, we also get similarly $h'(\mathbb{A}'_{p'_0}) \subset \mathbb{A}_{p_0}$. In conclusion, $h(\mathbb{A}_{p_0}) = \mathbb{A}'_{p'_0}$, as desired. This completes the proof. □

3.3.11. Segre nondegeneracy. Next, we check that Segre nondegeneracy is a biholomorphically invariant property. At first, we observe that it follows from the first functional equation in (2.1.25) that $\Theta(0, z, \overline{\Theta}(z, 0)) \equiv 0$, or equivalently $\Theta_0(z, \overline{\Theta}(z, 0)) \equiv 0$. The recipe is again to look at (3.1.10), replacing t by $(z, \overline{\Theta}(z, 0))$, which yields

$$\Theta'_{j,\beta}(h(z, \overline{\Theta}(z, 0))) \equiv R_{j,\beta}(\{\Theta_{j_1,\beta_1}(z, \overline{\Theta}(z, 0))\}_{1\leq j_1\leq d,\,|\beta_1|\leq|\beta|}). \tag{3.3.12}$$

Since h is invertible and maps the Segre variety $S_{\bar{p}_0}$ onto the Segre variety $S'_{\bar{p}'_0}$, we get the inequality
(3.3.13)
$$\operatorname{genrk}_{\mathbb{C}}\left(z' \mapsto \mathscr{Q}'_k(z', \overline{\Theta}'(z', 0))\right) \leq \operatorname{genrk}_{\mathbb{C}}\left(z \mapsto \mathscr{Q}_k(z, \overline{\Theta}(z, 0))\right).$$

Reversing the rôles of t and of t', we also get the opposite inequality, hence an equality. In particular, M is Segre nondegenerate at p_0 if and only if M' is Segre nondegenerate at p'_0.

3.3.14. Holomorphic nondegeneracy. Using again (3.1.10) and the analogous relation in which the rôles of t and of t' are reversed, we may establish that for $k \in \mathbb{N}$, we have

$$\operatorname{genrk}_{\mathbb{C}}\left(t' \mapsto \mathscr{Q}'_k(t')\right) = \operatorname{genrk}_{\mathbb{C}}\left(z \mapsto \mathscr{Q}_k(t)\right). \tag{3.3.15}$$

In particular, M is holomorphically nondegenerate at p_0 if and only if M' is holomorphically nondegenerate at p'_0.

§3.4. Manifolds without nondegeneracy conditions

3.4.1. Reflection mapping. It is also interesting to study generic submanifolds without requiring any nondegeneracy condition on them, as we shall see in our study of the generalized reflection principle in Part II of this memoir. Let $t' = h(t)$ be a local complex algebraic or analytic equivalence defined in a neighborhood of $p_0 \in M$ satisfying the same conditions as in §3.1.5. We do not require that h is invertible. Let $\bar{w}'_j = \Theta'_j(\bar{z}', t')$, $j = 1, \dots, d$ be the equations of M'. Let $\bar{\nu}' := (\bar{\lambda}', \bar{\mu}') \in \mathbb{C}^m \times \mathbb{C}^d$. We define the *reflection mapping* associated to such defining equations to be the vectorial power series

$$\mathscr{R}'_h(t, \bar{\nu}') := \left(\bar{\mu}'_j - \Theta'_j(\bar{\lambda}', h(t))\right)_{1 \leq j \leq d}, \tag{3.4.2}$$

which belongs to $\mathscr{A}_{\mathbb{C}}\{t, \bar{\nu}'\}^d$ or to $\mathbb{C}\{t, \bar{\nu}'\}^d$. By developing the right hand side in powers of $\bar{\lambda}'$, we can write more explicitely

$$\mathscr{R}'_h(t, \bar{\nu}') = \left(\bar{\mu}'_j - \sum_{\beta \in \mathbb{N}^m} (\bar{\lambda}')^\beta \, \Theta'_{j,\beta}(h(t))\right)_{1 \leq j \leq d}. \tag{3.4.3}$$

The datum of $\mathscr{R}'_h$ is essentially equivalent to the datum of the infinite collection of complex algebraic or analytic functions $\Theta'_{j,\beta}(h(t))$, or equivalently to the composition of the infinite Segre mapping of M' with h, namely the mapping $t \mapsto \mathscr{Q}'_\infty(h(t))$.

We observe that $\mathscr{R}'_h$ is biholomorphic invariant in the following sense. Let $t'' = h'(t')$ be a second local mapping, which we assume to be invertible (do not confuse here h' with the notation used in §3.1.5 for the inverse of h). Let $M'' := h'(M')$ and assume that its equations are $\bar{w}''_j = \Theta''_j(\bar{z}'', z'', w'')$, $j = 1, \dots, d$. We consider the composition $t'' = h'(h(t))$. Applying Theorem 3.1.9 and (3.1.11), we know that

$\Theta''_{j,\beta}(h'(t')) \equiv R'_{j,\beta}(\{\Theta'_{j,\beta}(t')\}_{1\leq j\leq d,\,\beta\in\mathbb{N}^m})$, where the $R'_{j,\beta}$ are certain algebraic or analytic expressions which depend only on h'. It follows that we can write

(3.4.4)
$$\begin{cases} \mathscr{R}''_{h'\circ h}(t,\bar{\nu}'') = \bar{\mu}'' - \sum\limits_{\beta\in\mathbb{N}^m} (\bar{\lambda}'')^\beta\, \Theta''_{j,\beta}(h'(h(t))) \\ \qquad\qquad\qquad = \bar{\mu}'' - \sum\limits_{\beta\in\mathbb{N}^m} (\bar{\lambda}'')^\beta\, R'_{j,\beta}(\{\Theta'_{j,\beta}(h(t))\}_{1\leq j\leq d,\,\beta\in\mathbb{N}^m}). \end{cases}$$

So we can essentially express the reflection mapping $\mathscr{R}''_{h'\circ h}(t,\bar{\nu}'')$ by means of the reflection mapping $\mathscr{R}'_h(t,\bar{\nu}')$, modulo algebraic or analytic expressions $R'_{j,\beta}$ which only depend on the change of coordinates $t''=h'(t')$. In particular, the $R'_{j,\beta'}$ are algebraic if M', h' and M'' are algebraic and the relation (3.4.4) shows that if $\mathscr{R}'_h(t,\bar{\nu}')$ was also algebraic at the beginning, then its algebraicity is preserved after the algebraic change of coordinates $t''=h'(t')$. It is in this sense that we say that $\mathscr{R}'_h$ is a biholomorphic invariant object. We shall study the reflection mapping thoroughly in Part II of this memoir.

3.4.5. Tangent holomorphic vector fields. It is desirable to obtain a rank property analogous to (3.3.5) for points t_p close to the origin. Whereas for a fixed integer k, it is in general untrue that (3.3.5) holds with the first rk_0 replaced by $\mathrm{rk}_{h(t_p)}$ and the second rk_0 replaced by rk_{t_p} (*see* Example 3.5.16 below), the corresponding property for $k=\infty$ is true.

Corollary 3.4.6. *For all t_p in a neighborhood of the origin, the rank at t_p of the infinite Segre mapping $t\mapsto\mathscr{Q}_\infty(t)$ of M coincides with the rank at $t'_{p'}=h(t_p)$ of the infinite Segre mapping $t'\mapsto\mathscr{Q}'_\infty(t')$ of M'.*

Proof. There exists an integer ℓ_p such that the rank n_p at t_p of the infinite Segre mapping $t\mapsto\mathscr{Q}_\infty(t)$ coincides with the rank at t_p of the ℓ_p-th Segre mapping $t\mapsto\mathscr{Q}_{\ell_p}(t)$. Hence for every $l=1,\dots,d$ and every $|\beta|\geq\ell_p+1$, the gradient of $\Theta_{j,\beta}(t)$ at t_p is a linear combination of the columns of the Jacobian matrix of $\mathrm{Jac}\,\mathscr{Q}_{\ell_p}(t_p)$. Using this fact, using the invertibilty of h and differentiating the two sides of (3.1.10), we deduce that the rank $n'_{p'}$ at $t'_{p'}$ of the infinite Segre mapping $t'\mapsto\mathscr{Q}'_\infty(t')$ is less than or equal to n_p, namely $n'_{p'}\leq n_p$. Since h is invertible, by considering the inverse $t=h'(t')$, we can reverse the rôles of t_p and of $t'_{p'}$ and we get the opposite inequality $n_p\leq n'_{p'}$, which completes the proof. $\square$

In particular, the generic rank $n_M=\max_{p\in M} n_p$ of the infinite Segre mapping of M is a biholomorphic invariant of M. We call this integer the *essential holomorphic dimension of* M. Concretely, n_M is the smallest integer such that there exists a $n_M\times n_M$ minor of the infinite Jacobian matrix

(3.4.7) $$\mathrm{Jac}\,\mathscr{Q}_\infty(t) = ([\partial\Theta_{j,\beta}/\partial t_i](t))^{1\leq i\leq n}_{1\leq j\leq d,\,\beta\in\mathbb{N}^m}$$

that does not vanish identically, but all its $(n_M+1)\times(n_M+1)$ minors do vanish identically.

Theorem 3.4.8. *With this integer n_M, there exist $(n-n_M)$ holomorphic vector fields*

$$\mathscr{T}_k=\sum_{i=1}^{n}a_i(t)\,\frac{\partial}{\partial t_i},\qquad k=1,\dots,n-n_M, \tag{3.4.9}$$

which have complex algebraic or analytic coefficients $a_i(t)$, which are defined in a neighborhood V_0 of the origin, which are tangent to $M\cap V_0$ and which are linearly independent at a Zariski-generic point $p\in V_0$. Conversely, the integer $(n-n_M)$ is the maximal number of holomorphic vector fields with complex algebraic or analytic coefficients defined in a neighborhood V_0 of the origin which are tangent to $M\cap V_0$ and linearly independent at a Zariski-generic point.

Proof. We choose integers $j_*^1,\dots,j_*^{n_M}$ with $1\le j_*^i\le d$, $i=1,\dots,n_M$, and multiindices $\beta_*^1,\dots,\beta_*^{n_M}\in\mathbb{N}^m$ such that the generic rank of the mapping $t\mapsto(\Theta_{j_*^l,\beta_*^l}(t))_{1\le l\le n_M}$ is equal to n_M. In other words, the Jacobian matrix $([\partial\Theta_{j_*^l,\beta_*^l}(t)/\partial t_i](t))_{1\le l\le n_M,\,1\le i\le n}$ possesses a $n_M\times n_M$ minor which does not vanish identically. If $n-n_M>0$, applying classical linear algebra (Cramer's rule for solving systems of linear equations), we see that there exist $(n-n_M)$ independent power series vectorial solutions $(a_{k,1}(t),\dots,a_{k,n}(t))$, $k=1,\dots,n-n_M$, of the system of n_M equations

$$\sum_{i=1}^{n}a_{k,i}(t)\,\frac{\partial\Theta_{j_*^l,\beta_*^l}}{\partial t_i}(t)\equiv 0,\qquad l=1,\dots,n_M. \tag{3.4.10}$$

Equivalently, the $(n-n_M)$ vector fields

$$\mathscr{T}_k:=\sum_{i=1}^{n}a_{k,i}(t)\,\frac{\partial}{\partial t_i}, \tag{3.4.11}$$

$k=1,\dots,n-n_M$, are linearly independent at a Zariski-generic point of V_0 and they satisfy $\mathscr{T}_k\Theta_{j_*^l,\beta_*^l}(t)\equiv 0$ for $k=1,\dots,n-n_M$ and $l=1,\dots,n_M$. Since M is generic, the restriction to M of the vector fields $\mathscr{T}_k$ are also linearly independent at a Zariski-generic point.

Let now $(j,\beta)\neq(j_*^l,\beta_*^l)$, for $l=1,\dots,n_M$. By assumption, we also have

$$\operatorname{genrk}_{\mathbb{C}}\big(t\longmapsto\big((\Theta_{j_*^l,\beta_*^l}(t))_{1\le l\le n_M},\,\Theta_{j,\beta}(t)\big)\big)=n_M. \tag{3.4.12}$$

In a neighborhood V_p of a point $t_p\in V_0$ at which this rank is equal to its maximum n_M, there exists a complex algebraic or analytic mapping $R_{j,\beta}$ such that we can write

$$\Theta_{j,\beta}(t)\equiv R_{j,\beta}(\Theta_{j_*^1,\beta_*^1}(t),\dots,\Theta_{j_*^{n_M},\beta_*^{n_M}}(t)) \tag{3.4.13}$$

for all $t\in V_p$. Since $\mathscr{T}_k\Theta_{j_*^l,\beta_*^l}(t)\equiv 0$, it follows that $\mathscr{T}_k\Theta_{j,\beta}(t)\equiv 0$ for $t\in V_p$, hence for all $t\in V_0$ thanks to the principle of analytic continuation.

In summary, we have shown that $\mathscr{T}_k\Theta_{j,\beta}(t) \equiv 0$ for all $k = 1, \dots, n - n_M$, all $j = 1, \dots, d$ and all $\beta \in \mathbb{N}^m$. We conclude immediately that the $\mathscr{T}_k$ are tangent to M, since

$$\mathscr{T}_k(\bar{w}_j - \Theta_j(\bar{z}, t)) \equiv \sum_{\beta \in \mathbb{N}^m} (\bar{z})^\beta \, \mathscr{T}_k\Theta_{j,\beta}(t) \equiv 0. \tag{3.4.14}$$

Conversely, suppose that there exist χ holomorphic vector fields $\mathscr{T}_k$, $k = 1, \dots, \chi$, like (3.4.9) with complex algebraic or analytic coefficients which are linearly independent at a Zariski-generic point of V_0 and such that $\mathscr{T}_k$ is tangent to $M \cap V_0$. By the tangency condition (3.4.14), we get $\mathscr{T}_k\Theta_{j,\beta}(t) \equiv 0$ for all $k = 1, \dots, \chi$, all $j = 1, \dots, d$ and all $\beta \in \mathbb{N}^m$. By considering these equations at a point at which the vector fields $\mathscr{T}_k$ are linearly independent, we deduce the inequality $\chi \leq n - n_M$. The proof of Theorem 3.4.8 is complete. □

Corollary 3.4.15. *The real algebraic or analytic generic submanifold M is holomorphically nondegenerate at 0, i.e. $n_M = n$, if and only if there does not exist any nonzero holomorphic vector field defined in a neighborhood V_0 of 0 which is tangent to $M \cap V_0$.*

This property may be considered as an equivalent definition of holomorphic nondegeneracy, as was done by N. Stanton in [28]. However, we believe that the previous definition in terms of the generic rank of the Segre mapping is more adequate.

3.4.16. Exceptional locus of M. We define the *extrinsic exceptional locus of M* to be the proper complex analytic set $\mathscr{E}^{\mathrm{exc}}$ which is the zero locus of all $n_M \times n_M$ minors of the Jacobian matrix $\mathrm{Jac}\, \mathscr{Q}_\infty(t)$. By Corollary 3.4.6, $\mathscr{E}^{\mathrm{exc}}$ is an invariant complex algebraic or analytic set which is independent of coordinates. We define the *intrinsic exceptional locus* of M to the proper real algebraic or analytic subset $M \cap \mathscr{E}^{\mathrm{exc}}$. By definition, the rank of $t \mapsto \mathscr{Q}_\infty(t)$ at $t_p \in V_0$ equals n_M if and only if $t_p \in M \backslash \mathscr{E}^{\mathrm{exc}}$. We shall come back to $\mathscr{E}^{\mathrm{exc}}$ in Corollary 3.5.53 below.

§3.5. Jets of Segre varieties and global nondegeneracy conditions

3.5.1. Fundamental definitions. Let $\mathscr{M}$ be the extrinsic complexification of M given by the equations $\xi_j = \Theta_j(\zeta, t)$, $j = 1, \dots, d$. We shall assume that $\mathscr{M}$ is complex algebraic or analytic and defined in the polydisc $\Delta_{2n}(\rho_1)$, as in Definition 2.1.44. Recall that the conjugate complexified Segre variety $\underline{\mathscr{S}}_t$ is the m-dimensional complex algebraic or analytic submanifold defined by the equations $\xi_j = \Theta_j(\zeta, t)$, $j = 1, \dots, d$, where t is fixed. We consider the mapping of k-th order jets of $\underline{\mathscr{S}}_t$ at one of its point $(\zeta, \Theta(\zeta, t))$ which is defined by

$$J^k_\tau \underline{\mathscr{S}}_t := \left(\zeta, \left(\frac{1}{\beta!} \, \partial^\beta_\zeta \Theta_j(\zeta, t) \right)_{1 \leq j \leq d, \, |\beta| \leq k} \right). \tag{3.5.2}$$

In this section, we shall study the mapping $J^k_\tau \underline{\mathscr{L}}_t$ thoroughly. It is complex algebraic or analytic with values in $\mathbb{C}^{m+N_{d,m,k}}$. If $k_2 \geq k_1$ and if π_{k_2,k_1} denotes the canonical projection $\mathbb{C}^{m+N_{d,m,k_2}} \to \mathbb{C}^{m+N_{d,m,k_1}}$, we obviously have $\pi_{k_2,k_1}(J^{k_2}_\tau \underline{\mathscr{L}}_t) = J^{k_1}_\tau \underline{\mathscr{L}}_t$.

Compared to the Segre mapping introduced in §3.1.1, here we notice that the term ζ is present and we may obviously identify $J^k_\tau \underline{\mathscr{L}}_t|_{\zeta=0}$ with $\mathscr{Q}_k(t)$.

We shall sometimes denote this mapping by $(t,\tau) \mapsto J^k_\tau \underline{\mathscr{L}}_t$, where we implicitely mean that $(t,\tau) \in \mathscr{M}$.

Analogously, we may also consider the mapping of k-th order jets of the complexified Segre variety $\mathscr{S}_\tau$ defined by the equations $w_j = \overline{\Theta}_j(z,\tau)$, $j = 1,\dots,d$, where τ is fixed. Its explicit expression is similar:

$$J^k_t \mathscr{S}_\tau := \left(z, \left(\frac{1}{\beta!}\, \partial^\beta_z \overline{\Theta}_j(z,\tau) \right)_{1\leq j\leq d,\, |\beta|\leq k} \right). \tag{3.5.3}$$

The link between these two mappings is very simple:

$$J^k_{\bar t} \underline{\mathscr{L}}_{\bar\tau} \equiv \overline{J^k_t \mathscr{S}_\tau} \tag{3.5.4}$$

In other words, the following diagram is commutative.

$$\begin{tikzcd}
\mathscr{M} \arrow[r, "\sigma"] \arrow[d, "J^k_\bullet \mathscr{S}_\bullet"'] & \mathscr{M} \arrow[d, "J^k_\bullet \underline{\mathscr{L}}_\bullet"] \\
\mathbb{C}^{m+N_{d,m,k}} \arrow[r, "(\overline{\bullet})"] & \mathbb{C}^{m+N_{d,m,k}}
\end{tikzcd},$$

where $(\overline{\bullet})$ denotes the complex conjugation operator. Since the two jet mappings are therefore essentially equivalent, we shall only study the nondegeneracy conditions for the mapping $J^k_\tau \underline{\mathscr{L}}_t$.

3.5.5. Invariance under changes of coordinates. As in §3.1.5, let $t' = h(t)$ be a change of complex algebraic or analytic coordinates. We shall prove the following theorem in Section 3.6 below. Notice that for $\zeta = 0$, we recover Theorem 3.1.9.

Theorem 3.5.6. *For every $j = 1,\dots,d$ and every $\beta \in \mathbb{N}^m$, there exists a complex algebraic or analytic mapping in its variables $Q_{j,\beta}$ such that*

$$\frac{1}{\beta!}\, \frac{\partial^{|\beta|}\Theta'_j}{\partial(\zeta')^\beta} \big(\bar f(\zeta,\Theta(\zeta,t)), h(t) \big) \equiv Q_{j,\beta} \left(\zeta, \left(\frac{1}{\beta_1!}\, \partial^{\beta_1}_\zeta \Theta_{j_1}(\zeta,t) \right)_{1\leq j_1\leq d,\, |\beta_1|\leq|\beta|} \right). \tag{3.5.7}$$

Here, the points (ζ,t) belong to a neighborhood of the origin, say to the polydisc $\Delta_{2m+d}(\rho_1)$. Fix $p = (t_p,\tau_p) \in \mathscr{M}$ which we identify with $(\zeta_p,t_p) \in \mathbb{C}^{2m+d}$ and denote $t'_{p'} := h(t_p)$ and $\zeta'_{p'} := \bar f(\tau_p)$. Locally in a neighborhood of (ζ_p,t_p), the mapping

$$(\zeta,t) \mapsto (\bar f(\zeta,\Theta(\zeta,t)), h(t)) =: (\zeta',t') \tag{3.5.8}$$

is invertible by assumption (remind that $\zeta \mapsto \bar f(\zeta,\Theta(\zeta,0))$ is invertible at $\zeta = 0$). Applying Theorem 3.5.6, we may deduce:

Corollary 3.5.9. *For every $k \in \mathbb{N}$, the following equality of ranks holds*
(3.5.10)
$$\begin{cases} \mathrm{rk}_{(\zeta_p,t_p)}\Big((\zeta,t)\mapsto(\zeta,\,(1/\beta!)\,(\partial_\zeta^\beta\Theta_j(\zeta,t))_{1\le j\le d,\,|\beta|\le k})\Big)= \\ \qquad\qquad = \mathrm{rk}_{(\zeta'_{p'},t'_{p'})}\Big((\zeta',t')\mapsto(\zeta',\,(1/\beta!)\,(\partial_{\zeta'}^\beta\Theta'_j(\zeta',t'))_{1\le j\le d,\,|\beta|\le k})\Big). \end{cases}$$

Proof. Indeed, using the change of coordinates (3.5.8), it suffices to show that the rank at (ζ_p,t_p) of the mapping $(\zeta,t)\mapsto\Big(\bar f(\zeta,\Theta(\zeta,t)),\,\frac{1}{\beta!}\,\partial_{\zeta'}^\beta\Theta'_j(\bar f(\zeta,\Theta(\zeta,t)),h(t))\Big)_{1\le j\le d,\,|\beta|\le k}$ is less than or equal to the rank at (ζ_p,t_p) of the mapping $(\zeta,t)\mapsto\Big(\zeta,\,\frac{1}{\beta!}\,\partial_\zeta^\beta\Theta_j(\zeta,t)\Big)_{1\le j\le d,\,|\beta|\le k}$, because after reversing the rôles of t and of t', we also get the opposite inequality. But this inequality follows directly by differentiating the two sides of (3.5.7) with respect to (ζ,t) at (ζ_p,t_p). $\square$

Let $p\in M$. The ranks at $(p,\bar p)$ of the mappings $(t,\tau)\mapsto J_\tau^k\underline{\mathscr{L}}_t$ are invariant under changes of coordinates. Thus, we may introduce several pointwise invariants of M at p as follows. We denote by $m+n_p\le m+n$ the maximal rank of the mapping $(t,\tau)\mapsto J_\tau^k\underline{\mathscr{L}}_t$ at $(t_p,\bar t_p)$ for $k=0,1,\dots$ and by ℓ_p the smallest integer k such that the rank at $(t_p,\bar t_p)$ of the mapping $(t,\tau)\mapsto J_\tau^k\underline{\mathscr{L}}_t$ is equal to $m+n_p$. More generally, for $k=0,\dots,\ell_M$, we denote by $\lambda_{k,p}$ the nonnegative integers satisfying

$$\mathrm{rk}_{(t_p,\bar t_p)}\big((t,\tau)\mapsto J_\tau^k\underline{\mathscr{L}}_t\big)=m+\lambda_{0,p}+\cdots+\lambda_{k,p}. \tag{3.5.11}$$

Obviously, the functions $p\mapsto n_p$, $p\mapsto\ell_p$, $p\mapsto\lambda_{k,p}$ are lower semicontinuous in the Zariski topology.

3.5.12. Generic ranks. To begin with, we observe that it follows from Corollary 3.5.9 that the generic ranks of the mappings $(t,\tau)\mapsto J_\tau^k\underline{\mathscr{L}}_t$, which increase with k, are invariant under changes of coordinates. We need the following stabilization result.

Lemma 3.5.13. *If* $\mathrm{genrk}_{\mathbb{C}}\big((t,\tau)\mapsto J_\tau^{k+1}\underline{\mathscr{L}}_t\big)=\mathrm{genrk}_{\mathbb{C}}\big((t,\tau)\mapsto J_\tau^k\underline{\mathscr{L}}_t\big)$, *then for all $l\ge 1$, we also have* $\mathrm{genrk}_{\mathbb{C}}\big((t,\tau)\mapsto J_\tau^{k+l}\underline{\mathscr{L}}_t\big)=\mathrm{genrk}_{\mathbb{C}}\big((t,\tau)\mapsto J_\tau^k\underline{\mathscr{L}}_t\big)$.

Proof. By assumption, in a neighborhood $\mathscr{V}_p$ of a point $(t_p,\tau_p)\in\mathscr{M}$ at which the ranks of the first two mappings are equal to their generic rank, hence maximal and locally constant, it follows from the constant rank theorem that for every $j=1,\dots,d$ and for every multiindex β with $|\beta|=k+1$, there exists a complex algebraic or analytic function $R_{j,\beta}$ such that we can write

$$\frac{1}{\beta!}\,\partial_\zeta^\beta\Theta_j(\zeta,t)=R_{j,\beta}\left(\zeta,\,\left(\frac{1}{\beta_1!}\,\partial_\zeta^{\beta_1}\Theta_{j_1}(\zeta,t)\right)_{1\le j_1\le d,\,|\beta_1|\le|k|}\right), \tag{3.5.14}$$

for all $(t,\tau) \in \mathscr{V}_p$. Differentiating these relations with respect to ζ and making substitutions, we obtain that for every $j = 1, \dots, d$ and every multiindex β with $|\beta| = k + l$, $l \geq 1$, there exists a complex algebraic or analytic function $R_{j,\beta}$ satisfying a relation like (3.5.14). This implies that the generic rank of the mapping $\mathscr{V}_p \ni (t,\tau) \mapsto J^{k+l}_\tau \underline{\mathscr{L}}_t$ is the same as the generic rank of the mapping $\mathscr{V}_p \ni (t,\tau) \mapsto J^k_\tau \underline{\mathscr{L}}_t$. As the generic rank propagates by the principle of analytic continuation, the lemma follows. $\square$

3.5.15. Reformulation of the five nondegeneracy conditions. We shall now observe that the five nondegeneracy conditions introduced in Section 3.2 may also be expressed by means of the morphism of jets of Segre varieties. This formulation will be much better than the formulation in terms of the Segre mapping given in Section 3.2, because it will be valuable not only for the central point p_0, but also for an arbitrary point p varying in a neighborhood of p_0. Before stating the theorem, we observe that, on the contrary, the k-th Segre mappings $t \mapsto \mathscr{Q}_k(t)$ are not appropriate to express the nondegeneracy conditions for other points than the origin.

Example 3.5.16. The first Segre mapping $\mathscr{Q}_1$ of the real algebraic hypersurface M of $\mathbb{C}^3$ given by the equation (which is the cubic tangent to the Example 3.2.20)

$$\bar{w} = w + i[2z_1\bar{z}_1 + z_1^2\bar{z}_2 + \bar{z}_1^2 z_2] \tag{3.5.17}$$

is the map

$$(z_1, z_2, w) \longmapsto (w,\, 2iz_1,\, iz_1^2), \tag{3.5.18}$$

which is only of rank 2 at every point. This shows that the rank of the Levi form of M at the origin is equal to 1, which is true. Does this imply that the rank of the Levi form of M is equal to 1 at every point ? Of course not, because the Levi matrix

$$\mathscr{H}(\varphi)(z,\bar{z}) = \begin{pmatrix} \frac{\partial^2\varphi}{\partial z_1 \partial \bar{z}_1} & \frac{\partial^2\varphi}{\partial z_2 \partial \bar{z}_1} \\ \frac{\partial^2\varphi}{\partial z_1 \partial \bar{z}_2} & \frac{\partial^2\varphi}{\partial z_2 \partial \bar{z}_2} \end{pmatrix} = \begin{pmatrix} 2 & 2z_1 \\ 2\bar{z}_1 & 0 \end{pmatrix} \tag{3.5.19}$$

is of rank 2 at every point with $z_1 \neq 0$, hence M is Levi nondegenerate outside $\{z_1 = 0\}$. This example shows that the k-th Segre mappings $\mathscr{Q}_k$ are appropriate to define nondegeneracy conditions only at the origin.

We shall therefore make some translations. Let $p = t_p = (z_p, w_p)$ be a point varying in a neighborhood of the central point p_0. To express the five nondegeneracy conditions using the original definitions given in Section 3.2, we must choose coordinates vanishing at p. Since we have already argued that the nondegeneracy conditions are then independent of the choice of coordinates vanishing at p, we can simply make a translation of coordinates by setting

$$t_1 := t - t_p, \qquad \text{or equivalently} \qquad t = t_p + t_1. \tag{3.5.20}$$

We shall assume that t_p belongs to M, hence $p^c = (t_p, \bar{t}_p)$ belongs to $\mathscr{M}$. The precise changes of coordinates will therefore be

$$\text{(3.5.21)} \qquad \begin{cases} z_1 = z - z_p, & z = z_1 + z_p, \\ w_1 = w - w_p, & w = w_1 + w_p, \\ \zeta_1 = \zeta - \bar{z}_p, & \zeta = \zeta_1 + \bar{z}_p, \\ \xi_1 = \xi - \bar{w}_p, & \xi = \xi_1 + \bar{w}_p. \end{cases}$$

In the coordinates $t_1 = (z_1, w_1)$ vanishing at t_p, we can represent the translation $\mathscr{M}_1$ of $\mathscr{M}$ by complex defining equations

$$\text{(3.5.22)} \qquad \xi_{1,j} = \Theta_{1,j}(\zeta_1, t_1), \qquad j = 1, \dots, d.$$

Of course, we may compute the $\Theta_{1,j}(\zeta_1, t_1)$ in terms of the $\Theta_j(\zeta, t)$ as follows. Since $\bar{w}_{j,p} = \Theta_j(\bar{z}_p, t_p)$, we have

$$\text{(3.5.23)} \qquad \Theta_{1,j}(\zeta_1, t_1) = \xi_{1,j} = \xi_j - \bar{w}_{j,p} = \Theta_j(\zeta, t) - \Theta_j(\bar{z}_p, t_p),$$

which yields for $j = 1, \dots, d$:

$$\text{(3.5.24)} \qquad \Theta_{1,j}(\zeta_1, t_1) = \Theta_j(\zeta_1 + \bar{z}_p, t_1 + t_p) - \Theta_j(\bar{z}_p, t_p).$$

If we now develope $\Theta_{1,j}(\zeta_1, t_1)$ in powers of ζ_1 (as we did for $\Theta(\zeta, t)$)

$$\text{(3.5.25)} \qquad \Theta_{1,j}(\zeta_1, t_1) = \sum_{\beta \in \mathbb{N}^m} (\zeta_1)^\beta \, \Theta_{1,j,\beta}(t_1),$$

then putting $\zeta_1 = 0$ in (3.5.24), we obtain for $\beta = 0 \in \mathbb{N}^m$ the formula

$$\text{(3.5.26)} \qquad \Theta_{1,j,0}(t_1) = \sum_{\beta \in \mathbb{N}^m} (\bar{z}_p)^\beta \, [\Theta_{j,\beta}(t_1 + t_p) - \Theta_{j,\beta}(t_p)],$$

and differentiating (3.5.24) at $\zeta_1 = 0$, we also obtain for all nonzero multi-indices $\beta \in \mathbb{N}^m \backslash \{0\}$ the important general explicit formulas

$$\text{(3.5.27)} \qquad \begin{cases} \Theta_{1,j,\beta}(t_1) = \displaystyle\sum_{\gamma \in \mathbb{N}^m} \frac{(\beta + \gamma)!}{\beta! \, \gamma!} \, (\bar{z}_p)^\gamma \, \Theta_{j,\beta+\gamma}(t_1 + t_p) \\ \qquad\qquad = \dfrac{1}{\beta!} \, \Big[\partial_\zeta^\beta \Theta_j(\zeta, t) \Big]_{\zeta = \bar{z}_p, \, t = t_1 + t_p}. \end{cases}$$

By means of these formulas, we have thus expressed $\Theta_{1,j}(\zeta_1, t_1)$ in terms of $\Theta(\zeta, t)$.

Consequently, we can introduce the k-th Segre mapping in the coordinates t_1

$$\text{(3.5.28)} \qquad \mathscr{Q}_{1,k} : \ \mathbb{C}^n \ni t_1 \longmapsto (\Theta_{1,j,\beta}(t_1))_{1 \le j \le d, \, |\beta| \le k} \in \mathbb{C}^{N_{d,n,k}},$$

and speak of the five nondegeneracy conditions in terms of $\mathscr{Q}_{1,k}$, since the coordinates t_1 are centered at t_p.

However, a better way of considering the nondegeneracy conditions at points p in a neighborhood of p_0 would be to express them in a single system of coordinates.

The following theorem provides the desired characterization of the five nondegeneracy conditions by means of the morphism of jets of Segre varieties, expressed in a single system of coordinates.

Theorem 3.5.29. *Let M be a real algebraic or analytic local generic submanifold of $\mathbb{C}^n$ given as usual by the equations* (3.1.2) *and let $J^k_\tau \underline{\mathscr{L}}_t$ be the morphism of k-th jets of conjugate Segre varieties given explicitely by*
(3.5.30)
$$\begin{cases} (\zeta, t) \longmapsto J^k_\tau \underline{\mathscr{L}}_t := \left(\zeta,\ \left(\dfrac{1}{\beta!}\,\partial^\beta_\zeta \Theta_j(\zeta, t)\right)_{1\leq j\leq d,\,|\beta|\leq k}\right) \\ \qquad\qquad\qquad\qquad = \left(\zeta,\ \left(\displaystyle\sum_{\gamma\in\mathbb{N}^m} \frac{(\beta+\gamma)!}{\beta!\,\gamma!}\,(\zeta)^\gamma\,\Theta_{j,\beta+\gamma}(t)\right)_{1\leq j\leq d,\,|\beta|\leq k}\right), \end{cases}$$
which is a complex algebraic or analytic map defined in $\Delta_{m+n}(\rho_1)$ with values in $\mathbb{C}^{m+N_{d,m,k}}$. Let $t_p \in M$ with $|t_p| < \rho_1$, let $(t_p, \bar{t}_p) \in \mathscr{M}$ and let $\ell_0 \in \mathbb{N}$ with $\ell_0 \geq 1$. Then

- **(1)** *M is Levi nondegenerate at t_p if and only if $J^1_\tau \underline{\mathscr{L}}_t$ is of rank equal to $m+n$ at $(\bar{z}_p, t_p)$.*
- **(2)** *M is ℓ_0-finitely nondegenerate at t_p if and only if ℓ_0 is the smallest integer k such that $J^k_\tau \underline{\mathscr{L}}_t$ is of rank equal to $m+n$ at $(\bar{z}_p, t_p)$.*
- **(3)** *M is ℓ_0-essentially finite at t_p if and only if ℓ_0 is the smallest integer k such that $J^k_\tau \underline{\mathscr{L}}_t$ is a locally finite complex algebraic or analytic map in a neighborhood of $(\bar{z}_p, t_p)$.*
- **(4)** *M is ℓ_0-Segre nondegenerate at t_p if and only if ℓ_0 is the smallest integer k such that the restriction of $J^k_\tau \underline{\mathscr{L}}_t$ to the second Segre chain, namely*

(3.5.31)
$$\begin{cases} \mathscr{S}^2_{\bar{t}_p} = \big\{\big(z_1 + z_p,\, \overline{\Theta}(z_1 + z_p, \bar{t}_p),\, \zeta_1 + \bar{z}_p, \\ \qquad\qquad \Theta(\zeta_1 + \bar{z}_p, z_1 + z_p, \overline{\Theta}(z_1 + z_p, \bar{t}_p))\big) \in \Delta_{2n}(\rho_1) :\ z_1 \in \mathbb{C}^m,\ \zeta_1 \in \mathbb{C}^m\big\} \end{cases}$$

  is of generic rank equal to $2m$ at $(z_1, \zeta_1) = (0, 0)$, hence all over $\mathscr{S}^2_{\bar{t}_p}$.
- **(5)** *M is ℓ_0-holomorphically nondegenerate at t_p if and only if ℓ_0 is the smallest integer k such that $J^k_\tau \underline{\mathscr{L}}_t$ is of generic rank $m+n$ in a neighborhood of $(\bar{z}_p, t_p)$, hence all over $\Delta_{m+n}(\rho_1)$.*

Proof. To establish this theorem, it suffices to inspect the five definitions given in Section 3.2 in the convenient system of coordinate $t_1 = t - t_p$ vanishing at t_p which was introduced before stating the theorem.

Indeed, thanks to the expressions (3.5.26) and (3.5.27) of $\Theta_{1,j,\beta}(t_1)$, we observe that except for $\beta = 0$, the components of $J^k_\tau \underline{\mathscr{L}}_t$ in (3.5.30) after the first m components $(\zeta_1, \ldots, \zeta_m)$ coincide with the components $\Theta_{1,j,\beta}(t_1)$ of $\mathscr{Q}_{1,k}(t_1)$, after $(\zeta)^\gamma$ has been replaced by $(\bar{z}_p)^\gamma$. For $\beta = 0$, according to (3.5.26), the difference between the two mappings is only the constant $-\sum_{\beta\in\mathbb{N}^m} (\bar{z}_p)^\beta\, \Theta_{j,\beta}(t_p) = -\bar{w}_p$, which disappears by differentiation.

Consequently, we verify the following relation between the Jacobian matrix of $J^k_\tau \underline{\mathscr{L}}_t$ at $(\zeta, t) = (\bar{z}_p, t_p)$ and the Jacobian matrix of $\mathscr{Q}_{1,k}$ at $t_1 = 0$, *i.e.* at $t = t_p$:

$$\mathrm{Jac}(J^k_\tau \underline{\mathscr{L}}_t)(\bar{z}_p, t_p) = \begin{pmatrix} \mathrm{I}_{m\times m} & 0 \\ *\,*\,* & \mathrm{Jac}\,\mathscr{Q}_{1,k}(0) \end{pmatrix} \tag{3.5.32}$$

where $\mathrm{I}_{m\times m}$ denotes the identity $m \times m$ matrix and $*\,*\,*$ some terms which we need not to compute. We deduce at once that

$$\mathrm{rk}_{\bar{z}_p, t_p}\left((\zeta, t) \mapsto J^k_\tau \underline{\mathscr{L}}_t\right) = m + \mathrm{rk}_0\left(t_1 \mapsto \mathscr{Q}_{1,k}(t_1)\right). \tag{3.5.33}$$

By expressing Levi nondegeneracy and ℓ_0-finite nondegeneracy in terms of $\mathscr{Q}_{1,k}(t_1)$ in the coordinates t_1 vanishing at t_p, we immediately get characterizations **(1)** and **(2)** of Theorem 3.5.29.

Since more generally, at a point $(z_1 + \bar{z}_p, t_1 + t_p)$ varying in a neighborhood of $(\bar{z}_p, t_p)$, we have

$$\mathrm{Jac}(J^k_\tau \underline{\mathscr{L}}_t)(z_1 + \bar{z}_p, t_1 + t_p) = \begin{pmatrix} \mathrm{I}_{m\times m} & 0 \\ *\,*\,* & \mathrm{Jac}\,\mathscr{Q}_{1,k}(t_1) \end{pmatrix}, \tag{3.5.34}$$

we deduce at once that

$$\mathrm{genrk}_{\mathbb{C}}\left((\zeta, t) \mapsto J^k_\tau \underline{\mathscr{L}}_t\right) = m + \mathrm{genrk}_{\mathbb{C}}\left(t_1 \mapsto \mathscr{Q}_{1,k}(t_1)\right). \tag{3.5.35}$$

By expressing holomorphic nondegeneracy in terms of $\mathscr{Q}_{1,k}(t_1)$ in the coordinates t_1 vanishing at t_p, we immediately get the characterization **(5)** of Theorem 3.5.29.

Next, we also observe that

$$\begin{cases} \dim_{\mathbb{C}} \mathbb{C}\{t_1\}/\ \langle \Theta_{1,j,\beta}(t_1)\rangle_{1\le j\le d,\,|\beta|\le k} = \\ \qquad\qquad = \dim_{\mathbb{C}} \mathbb{C}\{\zeta - \bar{z}_p,\, t - t_p\} \Big/ \left\langle j^k_\tau \underline{\mathscr{L}}_t - j^k_{\bar{t}_p} \underline{\mathscr{L}}_{t_p} \right\rangle. \end{cases} \tag{3.5.36}$$

We deduce the characterization **(3)** of Theorem 3.5.29.

For the last case **(4)** to be considered, we notice that the restriction of $\mathscr{Q}_{1,k}(t_1)$ to the Segre variety of M_1 passing through the origin in coordinates t_1, which is by definition the map

$$z_1 \longmapsto \left(\Theta_{1,j,\beta}(z_1, \overline{\Theta}_1(z_1, 0))\right)_{1\le j\le d,\,|\beta|\le k}, \tag{3.5.37}$$

coincides thanks to (3.5.27) (neglecting the constant $-\bar{w}_p$ which appears for $\beta = 0$) with

$$z_1 \longmapsto \left(\sum_{\gamma\in\mathbb{N}^m} \frac{(\beta+\gamma)!}{\beta!\,\gamma!}\,(\bar{z}_p)^\gamma\,\Theta_{j,\beta+\gamma}(z_1 + z_p, \overline{\Theta}_1(z_1, 0) + w_p)\right)_{1\le j\le d,\,|\beta|\le k}. \tag{3.5.38}$$

But since we have by (3.5.23)

$$\overline{\Theta}_1(z_1, 0) + w_p = \overline{\Theta}(z_1 + z_p, \bar{t}_p), \tag{3.5.39}$$

we can rewrite (3.5.38) as
(3.5.40)
$$z_1 \longmapsto \left(\sum_{\gamma \in \mathbb{N}^m} \frac{(\beta+\gamma)!}{\beta!\,\gamma!} \, (\bar{z}_p)^\gamma \, \Theta_{j,\beta+\gamma}(z_1+z_p, \overline{\Theta}(z_1+z_p, \bar{t}_p)) \right)_{1 \leq j \leq d,\, |\beta| \leq k} .$$

We claim that this mapping coincides with the last components of the restriction of the mapping $J^k_\tau \underline{\mathscr{L}}_t$ to the second Segre chain (3.5.31). Indeed, computing explicitely this restriction, we get exactly

$$\text{(3.5.41)} \qquad \begin{cases} (z_1, \zeta_1) \longmapsto \Bigg(\zeta_1 + \bar{z}_p, \Bigg(\displaystyle\sum_{\gamma \in \mathbb{N}^m} \frac{(\beta+\gamma)!}{\beta!\,\gamma!} \, (\zeta_1 + \bar{z}_p)^\gamma \\ \qquad\qquad \Theta_{j,\beta+\gamma}(z_1+z_p, \overline{\Theta}(z_1+z_p, \bar{t}_p)) \Big)_{1 \leq j \leq d,\, |\beta| < k} \Bigg) . \end{cases}$$

Consequently, we deduce
(3.5.42)
$$\mathrm{genrk}_{\mathbb{C}} \left((z_1, \zeta_1) \longmapsto J^k_\tau \underline{\mathscr{L}}_t |_{\mathscr{S}^2_{\bar{t}_p}} \right) = m + \mathrm{genrk}_{\mathbb{C}} \left(z_1 \mapsto \mathscr{Q}_{1,k}(z_1, \overline{\Theta}_1(z_1, 0)) \right) .$$

By expressing Segre nondegeneracy in terms of $\mathscr{Q}_{1,k}(t_1)$ in the coordinates t_1 vanishing at t_p, we immediately get the characterization **(4)** of Theorem 3.5.29.

The proof of Theorem 3.5.29. is complete. □

3.5.43. Essential holomorphic dimension and Levi multitype. If M is a local piece of generic submanifold as above, we denote by ℓ_M the smallest integer k such that Lemma 3.5.13 holds and we call it the *Levi type of* M. We denote by $m + n_M \leq m + n$ the generic rank of the mapping $(t, \tau) \mapsto J^{\ell_M}_\tau \underline{\mathscr{L}}_t$ and we call n_M the *essential holomorphic dimension of* M. This terminology is justified by the fact that locally in a neighborhood of a Zariski-generic point $p \in M$, then M is biholomorphically equivalent to a product $\underline{M}'_p \times \Delta^{n-n_M}$, where $\underline{M}'_p$ is a generic submanifold of codimension d of $\mathbb{C}^{n_M}$ (*see* Theorem 3.5.48 below).

By a specialization of the second functional equation (2.1.25), which yields $w \equiv \overline{\Theta}(0, 0, \Theta(0, 0, w))$, we see that the mapping $w \mapsto \Theta(0, 0, w)$ is invertible. Consequently, the rank and the generic rank of the zeroth jet mapping $\mathrm{genrk}_{\mathbb{C}} \left((t, \tau) \mapsto J^0_\tau \underline{\mathscr{L}}_t \right) = (\zeta, \Theta(\zeta, z, w))$ is equal to $m + d$. Thus, the integer n_M always satisfies the inequalities $d \leq n_M \leq n$.

Generally speaking, we may define $\lambda_{0,M} := \mathrm{genrk}_{\mathbb{C}} \left((t, \tau) \mapsto J^0_\tau \underline{\mathscr{L}}_t \right) = d$ and for every $k = 1, \ldots, \ell_M$,

$$\text{(3.5.44)} \quad \lambda_{k,M} := \mathrm{genrk}_{\mathbb{C}} \left((t, \tau) \mapsto J^k_\tau \underline{\mathscr{L}}_t \right) - \mathrm{genrk}_{\mathbb{C}} \left((t, \tau) \mapsto J^{k-1}_\tau \underline{\mathscr{L}}_t \right) .$$

By Lemma 3.5.13, we have $\lambda_{1,M} \geq 1, \ldots, \lambda_{\ell_M,M} \geq 1$. With these definitions, we have the relations

$$\text{(3.5.45)} \qquad \mathrm{genrk}_{\mathbb{C}} \left((t, \tau) \mapsto J^k_\tau \underline{\mathscr{L}}_t \right) = d + \lambda_{1,M} + \cdots + \lambda_{k,M},$$

for $k = 0, 1, \dots, \ell_M$ and

$$\operatorname{genrk}_{\mathbb{C}} \big((t,\tau) \mapsto J^k_\tau \underline{\mathscr{L}}_t\big) = n_M = d + \lambda_{1,M} + \cdots + \lambda_{\ell_M,M}, \tag{3.5.46}$$

for all $k \geq \ell_M$. It follows that we have the inequality

$$\ell_M \leq \lambda_{1,M} + \cdots + \lambda_{\ell_M,M} = n_M - d. \tag{3.5.47}$$

We are now in position to state and to prove the main theorem of this chapter in which we remind all the essential assumptions. Up to now, we have worked locally in a neighborhood of a point $p_0 \in M$. In the following theorem, we observe that we may easily globalize our constructions, provided that M is connected.

Theorem 3.5.48. *Let M be a connected real algebraic or analytic generic submanifold in $\mathbb{C}^n$ of codimension $d \geq 1$ and of CR dimension $m = n-d \geq 1$. Then there exist well defined integers n_M, ℓ_M and $\lambda_{0,M}, \lambda_{1,M}, \dots, \lambda_{\ell_M,M}$ and a proper real algebraic or analytic subvariety E of M such that for every point $p \in M \backslash E$ and for every system of coordinates (z,w) vanishing at p in which M is represented by defining equations $\bar{w}_j = \Theta_j(\bar{z},t)$, $j = 1, \dots, d$, then the following four properties hold*:

- **(1)** $\lambda_{0,M} = d$, $d \leq n_M \leq n$ *and* $\ell_M \leq n_M - d$.
- **(2)** *For every $k = 0, 1, \dots, \ell_M$, the mapping of k-th order jets of the conjugate complexified Segre varieties $(t,\tau) \mapsto J^k_\tau \underline{\mathscr{L}}_t$ is of rank equal to $m + \lambda_{0,M} + \cdots + \lambda_{k,M}$ at $(t_p, \bar{t}_p) = (0,0)$.*
- **(3)** $n_M = d + \lambda_{1,M} + \cdots + \lambda_{\ell_M,M}$ *and for every $k \geq \ell_M$, the mapping of k-th order jets of the conjugate complexified Segre varieties $(t,\tau) \mapsto J^k_\tau \underline{\mathscr{L}}_t$ is of rank equal to n_M at $(t_p, \bar{t}_p) = (0,0)$.*
- **(4)** *There exists a complex algebraic or analytic change of coordinates $t' = h(t)$ vanishing at p and defined in a neighborhood of p such that the image $M'_p := h(M)$ is the product $\underline{M'}_p \times \Delta^{n-n_M}$ of a real algebraic or analytic generic submanifold of codimension d in $\mathbb{C}^{n_M}$ by a complex polydisc Δ^{n-n_M}. Furthermore, at the central point $\underline{p'} \in \underline{M'}_p \subset \mathbb{C}^{n_M}$, the generic submanifold $\underline{M'}_p$ is ℓ_M-finitely nondegenerate, hence in particular its essential holomorphic dimension $n_{\underline{M'}_p}$ coincides with n_M.*

Proof. We fix $p_0 \in M$ and coordinates (z,w) as above vanishing at p_0. Let V_{p_0} be small neighborhood of p_0 in M. We first define $E \cap V_{p_0}$: it consists of the set of points $p \in V_{p_0}$ at which ℓ_p is not minimal, n_p is not maximal and the $\lambda_{k,p}$ are not maximal. Clearly, this set may be described by the vanishing of a collection of minors of the Jacobian matrix of the jet mapping $J^k_\tau \underline{\mathscr{L}}_t$, so it is a proper real algebraic or analytic subvariety E_{p_0} of V_{p_0}. Next, we verify that the various E_{p_0} glue together. Indeed, let assume that V_{p_0} and V_{q_0} overlap. Let $p \in V_{p_0} \cap V_{q_0}$. In the intersection $V_{p_0} \cap V_{q_0}$, we have to compare three real algebraic or analytic subvarieties E_{p_0}, E_p and E_{q_0} defined in terms of three morphisms of k-th order jets of conjugate Segre varieties. Using the important relation given by Theorem 3.5.6 (*cf.* also

Corollary 3.5.9), and using an explicit description of the above mentioned collection of minors we may establish easily that E_{p_0} and E_{q_0} coincide with E_p in $V_{p_0} \cap V_{q_0}$. Consequently, the various E_{p_0} glue together. Taking account of the considerations which precede the statement of Theorem 3.5.48, this proves properties **(1)**, **(2)** and **(3)**.

Let us now prove **(4)**. Let $p \in M \backslash E$. We choose coordinates $t = (z, w)$ vanishing at p. By assumption, for every $k \geq \ell_M$, the k-th order Segre mapping $(\zeta, t) \mapsto (\zeta, \frac{1}{\beta!}\,(\partial_\zeta^\beta \Theta_j(\zeta, t))_{1 \leq j \leq d,\, |\beta| \leq k})$ is of constant rank $m + n_M$ in a neighborhood of the origin (the point p) in $\mathbb{C}^{m+n}$. In particular, this entails that at every point of the form $(0, t_p)$ in a neighborhood of the origin, the mapping $t \mapsto (\Theta_{j,\beta}(t))_{1 \leq j \leq d,\, |\beta| \leq k}$ is of constant rank n_M. It follows from the constant rank theorem that there exists an open neighborhood V_0 of the origin in $\mathbb{C}^n$ such that the union of level sets $\mathscr{F}_q := \{t \in V_0 : \Theta_{j,\beta}(t) = \Theta_{j,\beta}(q),\, j = 1, \ldots, d,\, \beta \in \mathbb{N}^m\}$, for q running in V_0, constitutes a local complex algebraic or analytic foliation of V_0 by $(n - n_M)$-dimensional complex manifolds. We can straighten this foliation to a product $\Delta^{n_M} \times \Delta^{n - n_M}$, where the second factor corresponds to the leaves of this foliation. Let $t' = h(t)$ denote such a straightening change of coordinates. Let $M_0' := h(M)$ be of equation $\bar{w}' = \Theta'(\bar{z}', t')$. Thanks to Theorem 3.1.9, we observe that this foliation is again defined by the level sets of the functions $\Theta'_{j,\beta}(t')$, namely $\mathscr{F}_{p'} = \{t' \in V_0' : \Theta'_{j,\beta}(t') = \Theta'_{j,\beta}(p'),\, j = 1, \ldots, d,\, \beta \in \mathbb{N}^m\}$. To conclude that in these coordinates, M_0' is a product $\underline{M}_0' \times \Delta^{n - n_M}$, it suffices to establish the following lemma.

Lemma 3.5.49. *If a point $p' \in V_0'$ belongs to M_0', then its leaf $\mathscr{F}_{p'}$ is entirely contained in M_0'.*

Proof. Indeed, let $q' \in \mathscr{F}_{p'}$, *i.e.* $\Theta'_{j,\beta}(t'_{q'}) = \Theta'_{j,\beta}(t'_{p'})$ for all j and all β. It follows first that

$$0 = \bar{w}'_{p'} - \Theta'(\bar{z}'_{p'}, t'_{p'}) = \bar{w}'_{p'} - \Theta'(\bar{z}'_{p'}, t'_{q'}). \tag{3.5.50}$$

Next, thanks to the reality of M_0', by Lemma 2.1.27, there exists an invertible $d \times d$ matrix of power series $a'(t', \tau')$ such that $w' - \overline{\Theta}'(z', \tau') \equiv a'(t', \tau')\,[\xi' - \Theta'(\zeta', t')]$, so we deduce $0 = w'_{q'} - \overline{\Theta}'(z'_{q'}, \bar{t}'_{p'})$ and by conjugating

$$0 = \bar{w}'_{q'} - \Theta'(\bar{z}'_{q'}, t'_{p'}). \tag{3.5.51}$$

Finally, using again the property $\Theta'_{j,\beta}(t'_{q'}) = \Theta'_{j,\beta}(t'_{p'})$ for all j and all β, we deduce

$$0 = \bar{w}'_{q'} - \Theta'(\bar{z}'_{q'}, t'_{q'}), \tag{3.5.52}$$

which shows that $q' \in M_0'$. This completes the proof of Lemma 3.5.49. $\square$

The proof of Theorem 3.5.48 is complete. $\square$

At a Zariski-generic point, the generic submanifold M incorporates a factor Δ^{n-n_M} which is in a certain sense "flat" with respect to the point of view of CR geometry. After dropping this innocuous factor, we come down to the study of a finitely nondegenerate generic submanifold. Thus, in a certain sense, finitely nondegenerate submanifolds M are the "generic" models. This is why it is interesting to state a direct corollary of Theorem 3.5.48 about holomorphically nondegenerate submanifolds.

Corollary 3.5.53. *Let M be a connected real algebraic or analytic generic submanifold in $\mathbb{C}^n$ of codimension $d \geq 1$ and of CR dimension $m = n-d \geq 1$. Assume that M is holomorphically nondegenerate. Then*

- **(1)** *There exists an integer ℓ_M with $1 \leq \ell_M \leq m$ and a proper real algebraic or analytic subset E of M such that M is ℓ_M-finitely nondegenerate at every point of $M \backslash E$.*
- **(2)** *There exists a proper complex algebraic or analytic subset $\mathscr{E}^{\mathrm{exc}}$ defined in a neighborhood of M in $\mathbb{C}^n$ which depends only on M such that M is finitely nondegenerate at a point p if and only if $p \in M \backslash \mathscr{E}^{\mathrm{exc}}$.*
- **(3)** *In general, the inclusion $(\mathscr{E}^{\mathrm{exc}} \cap M) \subset E$ is strict.*

Proof. In a polydisc neighborhood $V_0 \subset \mathbb{C}^n$ of an arbitrary point $p_0 \in M$, we have defined in §3.4.16 a local exceptional locus $\mathscr{E}^{\mathrm{exc}}_{p_0} \subset V_0$ such that $M \cap \mathscr{E}^{\mathrm{exc}}_{p_0}$ consists exactly of finitely degenerate points. Thanks to their biholomorphic invariance, these local complex algebraic or analytic subsets $\mathscr{E}^{\mathrm{exc}}_{p_0}$ glue together in a well defined global exceptional locus $\mathscr{E}^{\mathrm{exc}}$ defined in a neighborhood of M in $\mathbb{C}^n$. Finally, $E \backslash (\mathscr{E}^{\mathrm{exc}} \cap M)$ consists of points which are k-finitely nondegenerate for some $k \geq \ell_M + 1$, and so is clearly nonempty in general. This completes the proof of Corollary 3.5.53. $\square$

§3.6. Transformation rules for jets of Segre varieties

We now establish the biholomorphic invariance of the mapping of jets of Segre varieties. As in §3.1.5, let $t' = h(t)$ with inverse $t = h'(t')$ be a complex algebraic or analytic local biholomorphism fixing the origin and let $M' := h(M)$. Theorems 3.1.9 follows from the two relations (8.5.2) and (8.5.3) after putting $\zeta = 0$, taking account of the fact that $\Theta_j(0,t)$ coincides with $\Theta_{j,0}(t)$ (in the notation $\Theta_{j,\beta}(t)$). Theorem 3.5.6 follows immediately from the two relations (8.5.2) and (8.5.3) just below, if we decide to consider the last argument of $Q_{j,\beta}$ simply as functions of $(\zeta, (\Theta_j(\zeta,t))_{1 \leq j \leq d})$.

Theorem 3.6.1. *For every $j = 1, \dots, d$ and every $\beta \in \mathbb{N}^m$, there exists a universal rational mapping in its variables $Q_{j,\beta}$ such that*

(3.6.2)
$$\begin{cases} \dfrac{1}{\beta!}\,\dfrac{\partial^{|\beta|}\Theta'_j}{\partial(\zeta')^\beta}\,\big(\bar f(\zeta,\Theta(\zeta,t)),h(t)\big) \equiv \\ \qquad \equiv Q_{j,\beta}\Big(\Big(\partial_\zeta^{\beta_1}\Theta_{j_1}(\zeta,t)\Big)_{1\le j_1\le d,\,|\beta_1|\le|\beta|},\ \big(\partial_\tau^{\alpha_1}\bar h_{i_1}(\zeta,\Theta(\zeta,t))\big)_{1\le i_1\le n,\,|\alpha_1|\le|\beta|}\Big). \end{cases}$$

Here, the $Q_{j,\beta}$ are algebraic or analytic in a neighborhood of the constant jet $((\partial_\zeta^{\beta_1}\Theta_{j_1}(0,0))_{1\le j_1\le d,\,|\beta_1|\le|\beta|},\ (\partial_t^{\alpha_1}\bar h_{i_1}(0,0))_{1\le i_1\le n,\,|\alpha_1|\le|\beta|})$. Equivalently, we have the relations for all $j = 1, \dots, d$ and all $\beta \in \mathbb{N}^m$:

(3.6.3)
$$\begin{cases} \Theta'_{j,\beta}(h(t)) \equiv \displaystyle\sum_{\gamma\in\mathbb{N}^m} (-1)^\gamma\,\frac{(\beta+\gamma)!}{\beta!\,\gamma!}\,\bar f(\zeta,\Theta(\zeta,t))^\gamma \\ Q_{j,\beta+\gamma}\Big(\Big(\partial_\zeta^{\beta_1}\Theta_{j_1}(\zeta,t)\Big)_{1\le j_1\le d,\,|\beta_1|\le|\beta|+|\gamma|},\ \big(\partial_\tau^{\alpha_1}\bar h_{i_1}(\zeta,\Theta(\zeta,t))\big)_{1\le i_1\le n,\,|\alpha_1|\le|\beta|+|\gamma|}\Big). \end{cases}$$

Proof. As in §3.1.5, we may assume that the complex defining equations of M' are of the form $\bar w'_j = \Theta'_j(\bar z', t')$, $j = 1, \dots, d$ in coordinates $t' = (z', w') \in \mathbb{C}^m \times \mathbb{C}^d$. Geometrically speaking, this means that the linear mapping $\pi'_{z'} \circ dh : T_0^c M \to \mathbb{C}^m_{z'}$ is submersive, where $\pi'_{z'} : \mathbb{C}^n \to \mathbb{C}^m_{z'}$ is the natural projection onto the z'-space. We decompose the mapping $h(t) = (f(t), g(t)) \in \mathbb{C}^m \times \mathbb{C}^d$. By complexifying the fundamental relations $\bar g_j(\tau) = \Theta'_j(\bar f(\tau), h(t))$, $j = 1, \dots, d$, which express that h maps M into M' and by replacing ξ by $\Theta(\zeta, \tau)$, we obtain the following power series identities

$$\bar g_j(\zeta,\Theta(\zeta,t)) \equiv \Theta'_j(\bar f(\zeta,\Theta(\zeta,t)),h(t)), \qquad j = 1, \dots, d. \tag{3.6.4}$$

We differentiate this relation with respect to ζ_k, for $k = 1, \dots, m$. Remembering that the explicit expression of the natural basis of complexified $(0,1)$-vector fields is given by

$$\underline{\mathscr{L}}_k = \frac{\partial}{\partial\zeta_k} + \sum_{j=1}^{1} \frac{\partial\Theta_j}{\partial\zeta_k}(\zeta,t)\,\frac{\partial}{\partial\xi_j}, \tag{3.6.5}$$

for $k = 1, \dots, m$, we immediately see that differentiation with respect to ζ_k of a power series $\psi(\zeta, \Theta(\zeta, t))$ is equivalent to applying the vector field $\underline{\mathscr{L}}_k$ to ψ, viewed as a derivation. So we get by the chain rule

(3.6.6)
$$\underline{\mathscr{L}}_k\bar g_j(\zeta,\Theta(\zeta,t)) \equiv \sum_{l=1}^{m} \underline{\mathscr{L}}_k\bar f_l(\zeta,\Theta(\zeta,t))\,\frac{\partial\Theta'_j}{\partial\zeta'_l}(\bar f(\zeta,\Theta(\zeta,t)),h(t)).$$

Since $\pi'_{z'} \circ dh : T_0^c M \to \mathbb{C}^m_{z'}$ is submersive, we have the nonvanishing of the following determinant

$$\det\ \big(\underline{\mathscr{L}}_{k_1}\bar f_{k_2}(0)\big)_{1\le k_1,k_2\le m} \neq 0. \tag{3.6.7}$$

Hence we can divide locally for (ζ, t) in a neighborhood of the origin by the determinant

$$\mathscr{D}(\zeta, t) := \det \left(\underline{\mathscr{L}}_{k_1} \bar{f}_{k_2}(\zeta, \Theta(\zeta, t))\right)_{1 \leq k_1, k_2 \leq m}. \tag{3.6.8}$$

Viewing (3.6.6) as an inhomogeneous linear system and using the classical rule of Cramer, for every $j = 1, \dots, d$, we can solve the first partial derivatives $\partial \Theta'_j / \partial \zeta'_k$ with respect to the other terms, which yields expressions of the form

$$\frac{\partial \Theta'_j}{\partial \zeta'_k}(\bar{f}(\zeta, \Theta(\zeta, t)), h(t)) \equiv \frac{R_{j,k}\left((\underline{\mathscr{L}}_{k'_1} \bar{h}_{i_1}(\zeta, \Theta(\zeta, t)))_{1 \leq i_1 \leq n,\, 1 \leq k'_1 \leq m}\right)}{\mathscr{D}(\zeta, t)}. \tag{3.6.9}$$

Here, by the very application of Cramer's rule, it follows that the terms $R_{j,k}$ are certain universal polyomials of determinant type (some minors). By differentiating again (3.6.9) with respect to the variables ζ_k, using again Cramer's rule, we get that for every pair of integers (k_1, k_2) with $1 \leq k_1,\ k_2 \leq m$ and for every $j = 1, \dots, d$, there exist a universal polynomial R_{j,k_1,k_2} such that we can write

$$\frac{\partial^2 \Theta'_j}{\partial \zeta'_{k_1} \partial \zeta'_{k_2}} \left(\bar{f}(\zeta, \Theta(\zeta, t)), h(t)\right) \equiv \frac{R_{j,k_1,k_2}\left((\underline{\mathscr{L}}_{k'_1,k'_2} \bar{h}_{i_1}(\zeta, \Theta(\zeta, t)))_{1 \leq i_1 \leq n,\, 1 \leq k'_1, k'_2 \leq m}\right)}{\mathscr{D}(\zeta, t)^3}. \tag{3.6.10}$$

The reader should notice the exponent 3 in the denominator, with the decomposition "3"="2"+"1" where "2" comes from the derivatives of the quotient $R_{j,k}/\mathscr{D}$ in (3.6.9) and where "1" comes from the second application of Cramer's rule.

Remind that for an arbitrary multi-index $\beta = (\beta_1, \dots, \beta_m) \in \mathbb{N}^m$, we denote by $\underline{\mathscr{L}}^\beta$ the antiholomorphic derivation of order $|\beta|$ defined by $(\underline{\mathscr{L}}_1)^{\beta_1} \cdots (\underline{\mathscr{L}}_m)^{\beta_m}$.

Differentiating more generally the relations (3.6.4) with respect to $\zeta^\beta = \zeta_1^{\beta_1} \cdots \zeta_m^{\beta_m}$, we see by an easy induction that for every multindex $\beta \in \mathbb{N}^m$ and for every $j = 1, \dots, d$, there exists a complicated but universal polynomial $R_{j,\beta}$ such that the following identity holds:

$$\frac{1}{\beta!} \frac{\partial^{|\beta|} \Theta'_j}{\partial (\zeta')^\beta} \left(\bar{f}(\zeta, \Theta(\zeta, t)), h(t)\right) \equiv \frac{R_{j,\beta}\left((\underline{\mathscr{L}}^{\beta_1} \bar{h}_{i_1}(\zeta, \Theta(\zeta, t)))_{1 \leq i_1 \leq n,\, 1 \leq |\beta_1| \leq |\beta|}\right)}{[\mathscr{D}(\zeta, t)]^{2|\beta|-1}}. \tag{3.6.11}$$

An important observation is in order. The composed derivations $\underline{\mathscr{L}}^{\beta_1}$ are certain differential operators with nonconstant coefficients. Using the explicit expressions of the $\underline{\mathscr{L}}_k$, we see that all these coefficients are certain universal polynomials of the collection of partial derivatives $(\partial^{|\beta_2|} \Theta_{j_2}(\zeta, t) / \partial z^{\beta_2})_{1 \leq j_2 \leq d,\, 1 \leq |\beta_2| \leq |\beta_1|}$. Thus the numerator of (3.6.11) becomes a certain universal (computable by means of combinatorial formulas)

algebraic or analytic function of the collection

(3.6.12)
$$\left(\left(\partial_\zeta^{\beta_1}\Theta_{j_1}(\zeta,t)\right)_{1\le j_1\le d,\,|\beta_1|\le|\beta|},\ \left(\partial_t^{\alpha_1}\bar h_{i_1}(\zeta,\Theta(\zeta,t))\right)_{1\le i_1\le n,\,|\alpha_1|\le|\beta|}\right)$$

A similar property holds for the denominator. In conclusion, we have constructed the rational mapping $Q_{j,\beta}$ satisfying (3.6.2).

For the second part of Theorem 3.6.1, let us rewrite the relations (3.6.2) in the following more explicit form, simply obtained by developing the left hand side with respect to the powers $(\bar f)^\gamma$:

(3.6.13)
$$\begin{cases} \displaystyle\sum_{\gamma\in\mathbb{N}^m}\frac{(\beta+\gamma)!}{\beta!\,\gamma!}\ \bar f(\zeta,\Theta(\zeta,t))^\gamma\,\Theta'_{j,\beta+\gamma}(h(t))\equiv \\ \qquad\qquad \displaystyle\equiv Q_{j,\beta}\left(\left(\partial_\zeta^{\beta_1}\Theta_{j_1}(\zeta,t)\right)_{1\le j_1\le d,\,|\beta_1|\le|\beta|},\ \left(\partial_t^{\alpha_1}\bar h_{i_1}(\zeta,\Theta(\zeta,t))\right)_{1\le i_1\le n,\,|\alpha_1|\le|\beta|}\right). \end{cases}$$

We may interpret this infinite collection of identities as an infinite upper triangular inhomogeneous linear system with unknowns being the $\Theta'_{j,\beta}(h(t))$. The inversion of this infinite triangular matrix is in fact very elementary. Indeed, by interpreting Taylor's formula at a purely formal level, we see that if we are given an infinite collection of equalities with complex coefficients and with $\zeta\in\mathbb{C}^m$ which is of the form

$$\sum_{\gamma\in\mathbb{N}^m}\frac{(\beta+\gamma)!}{\beta!\,\gamma!}\,\zeta^\gamma\,\Theta'_{j,\beta+\gamma}=Q_{j,\beta}, \tag{3.6.14}$$

for all $j=1,\dots,d$ and all $\beta\in\mathbb{N}^m$, then we can solve the unknowns $\Theta'_{j,\beta}$ in terms of the right hand side terms $Q_{j,\beta}$ by means of a totally similar formula, except for signs:

$$\sum_{\gamma\in\mathbb{N}^m}(-1)^\gamma\,\frac{(\beta+\gamma)!}{\beta!\,\gamma!}\,\zeta^\gamma\,Q_{j,\beta+\gamma}=\Theta'_{j,\beta}, \tag{3.6.15}$$

for all $j=1,\dots,d$ and all $\beta\in\mathbb{N}^m$. Applying this observation to (3.6.13), we deduce the representation (3.6.3) in Theorem 3.6.1, which completes the proof. □

§3.7. Local geometry of CR submanifolds at a Zariski-generic point

Let $M\subset\mathbb{C}^n$ be a *not necessarily generic* connected real algebraic or analytic CR submanifold of codimension d, of CR dimension m and of holomorphic codimension $c=d-n+m$. Combining Theorem 2.1.9, Theorem 2.1.32, Corollary 2.8.6 and Theorem 3.5.48, we obtain the following local explicit coordinate representation of M locally in a neighborhood of a Zariski-generic point. This theorem will be useful in Part II of this memoir.

Theorem 3.7.1. *There exists a proper real algebraic or analytic subset E of M and integers m_1, m_2, d_1, d_2, c which depend only on M and which satisfy*

$$\begin{cases} d = d_1 + d_2 + 2c, \\ m = m_1 + m_2, \end{cases} \tag{3.7.2}$$

and in the case where $m_1 \geq 1$, there exist moreover two integers ℓ_M and ν_M which satisfy

$$\begin{cases} \ell_M \ \leq m_1, \\ \nu_M \ \leq d_1 + 1 \end{cases} \tag{3.7.3}$$

such that for every point $p_0 \in M \backslash E$, there exist local complex analytic or algebraic normal coordinates

$$(z_1, z_2, w_1, w_2, w_3) \in \mathbb{C}^{m_1} \times \mathbb{C}^{m_2} \times \mathbb{C}^{d_1} \times \mathbb{C}^{d_2} \times \mathbb{C}^c \tag{3.7.4}$$

vanishing at p_0 and complex algebraic or analytic defining functions $\Theta_{1,j_1}(\bar{z}_1, z_1, w_1, w_2)$, $j_1 = 1, \ldots, d_1$ which converge normally in $\Delta_{2m_1+d_1+d_2}(2\rho_1)$ for some $\rho_1 > 0$, which satisfy $\Theta_{1,j_1}(0, z_1, w_1, w_2) \equiv 0$ for $j_1 = 1, \ldots, d_1$, and which are independent of $(\bar{z}_2, z_2)$ such that M is represented locally in a neighborhood of p_0 by the complex defining equations

$$\begin{cases} 0 = w_3, \\ 0 = \bar{w}_2 - w_2, \\ 0 = \bar{w}_1 - \Theta_1(\bar{z}_1, z_1, w_1, w_2), \end{cases} \tag{3.7.5}$$

in the polydic $\Delta_n(\rho_1)$ and such that, moreover, for every constant $u_{2,q} \in \mathbb{R}^{d_2}$, the generic submanifold $M_{1,u_{2_q}}$ of $\mathbb{C}^{m_1} \times \mathbb{C}^{d_1}$ defined by the complex equations

$$0 = \bar{w}_1 - \Theta_1(\bar{z}_1, z_1, w_1, u_{2,q}), \tag{3.7.6}$$

which identifies with the intersection of M with the complex subspace $\{w_2 = u_{2,q} = ct., \, w_3 = 0\}$, is minimal of Segre type ν_M and ℓ_M-finitely nondegenerate at $(z_1, w) = (0, 0)$. In the case where $m_1 = 0$, the third equation in (3.7.5) *should be replaced by the simpler vectorial equation $\bar{w}_1 = w_1$, hence in this case M identifies in a neighborhood of p_0 with the intersection of $\Delta_n(\rho_1)$ with the Levi-flat product $\mathbb{C}^{m_2} \times \mathbb{R}^{d_1} \times \mathbb{R}^{d_2} \times \{0\}$ in $\mathbb{C}^{m_2} \times \mathbb{C}^{d_1} \times \mathbb{C}^{d_2} \times \mathbb{C}^c$.*

Chapter 4: Nondegeneracy conditions for power series CR mappings

§4.1. CR-HORIZONTAL NONDEGENERACY CONDITIONS FOR POWER SERIES CR MAPPINGS

§4.1.1. Nondegeneracy conditions for power series mappings. The datum of a formal, or complex algebraic or complex analytic mapping $h : \mathbb{C}^n \to \mathbb{C}^{n'}$ with $h(0) = 0$ is equivalent to the datum of a collection of n' power series $(h_1(t), \dots, h_{n'}(t))$, where $t \in \mathbb{C}^n$, with the $h_{i'}(t)$ being scalar power series vanishing at the origin and belonging to $\mathbb{C}[\![t]\!]$, to $\mathbb{C}\{t\}$ or to $\mathscr{A}_{\mathbb{C}}\{t\}$. We introduce five classical nondegeneracy conditions, which we formulate in the case where $h(t) \in \mathbb{C}[\![t]\!]^{n'}$.

Definition 4.1.2. A formal power series mapping $h(t) = (h_1(t), \dots, h_{n'}(t))$, with components $h_{i'}(t) \in \mathbb{C}[\![t]\!]$, $i' = 1, \dots, n'$, is called

- **(1)** *Invertible* if $n' = n$ and $\det\left([\partial h_{i_1}/\partial t_{i_2}](0)\right)_{1 \le i_1, i_2 \le n} \neq 0$.
- **(2)** *Submersive* if $n \ge n'$ and there exist integers $1 \le i(1) < \cdots < i(n') \le n$ such that $\det\left([\partial h_{i'_1}/\partial t_{i(i'_2)}](0)\right)_{1 \le i'_1, i'_2 \le n'} \neq 0$.
- **(3)** *Finite* if the ideal generated by the components $h_1(t), \dots, h_{n'}(t)$ is of finite codimension in $\mathbb{C}[\![t]\!]$. This implies $n' \ge n$.
- **(4)** *Dominating* if $n \ge n'$ and there exist integers $1 \le i(1) < \cdots < i(n') \le n$ such that $\det([\partial h_{i'}/\partial t_{i(i'_2)}](t))_{1 \le i'_1, i'_2 \le n'} \not\equiv 0$ in $\mathbb{C}[\![t]\!]$.
- **(5)** *Transversal* if there does not exist a nonzero power series $G(t'_1, \dots, t'_{n'}) \in \mathbb{C}[\![t'_1, \dots, t'_{n'}]\!]$ such that $G(h_1(t), \dots, h_{n'}(t)) \equiv 0$ in $\mathbb{C}[\![t]\!]$.

It is elementary to see that invertibility implies submersiveness which implies domination. Furthermore, we have:

Lemma 4.1.3. *If a formal power series is either invertible, submersive or dominating, then it is transversal.*

Proof. It suffices to prove the statement in the case where h is dominating. Suppose on the contrary that there exists a nonzero power series $G(t'_1, \dots, t'_{n'}) \in \mathbb{C}[\![t'_1, \dots, t'_{n'}]\!]$ such that $G(h_1(t), \dots, h_{n'}(t)) \equiv 0$ in $\mathbb{C}[\![t]\!]$. By differentiating this identity with respect to the t_i and looking at the linear homogeneous system so obtained, we deduce that all the $n' \times n'$ minors (of maximal dimension) of the Jacobian matrix $([\partial h_{i'}/\partial t_i](t))_{1 \le i \le n,\, 1 \le i' \le n'})$ vanish identically in $\mathbb{C}[\![t]\!]$, contradicting domination. □

Lemma 4.1.4. *In the equidimensional case $n' = n$, invertibility implies* (*and is in fact equivalent to*) *submersiveness, which implies finiteness, which implies domination, which finally implies transversality.*

Proof. Classical result from local complex analytic geometry, which may easily reproved by the reader or found for instance [1], [6] or in the references therein. □

4.1.5. Power series CR mappings and CR-horizontal nondegeneracy conditions. Let M and M' be two real algebraic or analytic generic submanifolds of $\mathbb{C}^n$ and of $\mathbb{C}^{n'}$. Let $r_j(t, \bar{t}) := \bar{w}_j - \Theta_j(\bar{z}, t)$, $j = 1, \dots, d$ and

$r'_{j'}(t', \bar{t}') := \bar{w}'_{j'} - \Theta'_{j'}(\bar{z}', t')$, $j' = 1, \ldots, d'$, be defining equations for M and for M'. Following the definition given in §2.1.5, we say that h *is a* (*local*) *power series CR mapping from* M *to* M' if there exists a $d' \times d$ matrix $a(t, \bar{t})$ of formal, analytic or algebraic power series such that, in vectorial notation

$$r'(h(t), \bar{h}(\bar{t})) \equiv a(t, \bar{t})\, r(t, \bar{t}). \tag{4.1.6}$$

Setting $\bar{t} = 0$ in this matrix identity, we get

$$r'(h(t), 0) \equiv a(t, 0)\, r(t, 0). \tag{4.1.7}$$

The set defined by the equations $r_j(t, 0) = 0$ is of course the Segre variety $S_{\bar{p}_0}$ passing through the origin. Similarly, the set defined by $r'_{j'}(t', 0) = 0$, $j' = 1, \ldots, d'$, is the Segre variety $S_{\bar{p}'_0}$. Then (4.1.7) shows that h induces a power series mapping from the Segre variety $S_{\bar{p}_0}$ to $S'_{\bar{p}'_0}$. We can thus apply Definition 4.1.2 at the level of Segre varieties.

Definition 4.1.8. A power series CR mapping $h : M \to M'$ is called

- **(1)** *CR-invertible at* p_0 if $m = m'$ and if the induced formal mapping $h|_{S_{\bar{p}_0}} : S_{\bar{p}_0} \to S'_{\bar{p}'_0}$ between Segre varieties passing through the origin is a formal invertible mapping at 0.
- **(2)** *CR-submersive at* p_0 if $m \geq m'$ and if the induced formal mapping $h|_{S_{\bar{p}_0}} : S_{\bar{p}_0} \to S'_{\bar{p}'_0}$ between Segre varieties passing through the origin is a formal submersion at 0.
- **(3)** *CR-finite at* p_0 if the induced formal mapping $h|_{S_{\bar{p}_0}} : S_{\bar{p}_0} \to S'_{\bar{p}'_0}$ between Segre varieties passing through the origin is finite at 0.
- **(4)** *CR-dominating at* p_0 if the induced formal mapping $h|_{S_{\bar{p}_0}} : S_{\bar{p}_0} \to S'_{\bar{p}'_0}$ between Segre varieties passing through the origin is dominating at 0.
- **(5)** *CR-transversal at* p_0 if the induced formal mapping $h|_{S_{\bar{p}_0}} : S_{\bar{p}_0} \to S'_{\bar{p}'_0}$ between Segre varieties passing through the origin is transversal at 0.

4.1.9. Complexified mapping. We may reformulate these definitions in a more concrete way as follows. First of all, we may of course complexify the defining identities (4.1.6), which yields $r'(h(t), \bar{h}(\tau)) \equiv a(t, \tau)\, r(t, \tau)$. These complexified identities show that the *complexified mapping*

$$h^c(t, \tau) := (h(t), \bar{h}(\tau)) \in \mathbb{C}[\![t]\!]^n \times \mathbb{C}[\![\tau]\!]^n. \tag{4.1.10}$$

induces a power series mapping from $\mathscr{M}$ to $\mathscr{M}'$. As explained in §1.2.2, the complexified mapping h^c stabilizes the two pairs of foliations $(\mathscr{F}, \underline{\mathscr{F}})$ and $(\mathscr{F}', \underline{\mathscr{F}'})$, namely h^c sends (conjugate) complexified Segre varieties of $\mathscr{M}$ to (conjugate) complexified Segre varieties of $\mathscr{M}'$.

After replacing ξ by $\Theta(\zeta, t)$ in (4.1.10), we obtain the following power series identities in $\mathbb{C}[\![\zeta, t]\!]$:

$$\bar{g}_{j'}(\zeta, \Theta(\zeta, t)) \equiv \Theta'_{j'}(\bar{f}(\zeta, \Theta(\zeta, t)), h(t)), \qquad j' = 1, \ldots, d'. \tag{4.1.11}$$

In fact, as may be easily established, these identities are equivalent to the existence of a $d' \times d$ matrix of formal power series $a(t,\tau)$ which satisfies (4.1.6). However, *throughout this memoir, we shall work only with the more convenient fundamental power series identities* (4.1.11).

Of course, the Segre variety passing through p_0 is represented by

$$S_{\bar{p}_0}: \quad w_j = \overline{\Theta}_j(z,0), \quad j = 1,\dots,d. \tag{4.1.12}$$

Similarly, the Segre variety passing through p_0' is represented by

$$S'_{\bar{p}'_0}: \quad w'_{j'} = \overline{\Theta}'_{j'}(z',0), \quad j' = 1,\dots,d'. \tag{4.1.13}$$

If we split $h = (f,g) \in \mathbb{C}^{m'} \times \mathbb{C}^{d'}$, then the restriction of h to $S_{\bar{p}_0}$ coincide with the power series CR mapping

$$\mathbb{C}^m \ni z \longmapsto \Big(f(z,\overline{\Theta}(z,0)),\, \overline{\Theta}'(f(z,\overline{\Theta}(z,0)),\, 0)\Big) \in \mathbb{C}^{m'} \times \mathbb{C}^{d'}. \tag{4.1.14}$$

By projection onto the $\mathbb{C}^{m'} \times \{0\}$, we may of course identify this mapping with the *CR-horizontal part* of the mapping defined by

$$\mathbb{C}^m \ni z \longmapsto f(z,\overline{\Theta}(z,0)) \in \mathbb{C}^{m'}. \tag{4.1.15}$$

In the special case where M' is given in normal coordinates, we have $\Theta'(z',0) \equiv 0$, hence the last d' terms in (4.1.7) all vanish and the identification of $h|_{S_{\bar{p}_0}}$ with its CR-horizontal part is trivial in this case (but we shall avoid for the moment to introduce normal coordinates). With such notations, we can reformulate the above five nondegeneracy conditions more concretely.

Definition 4.1.16. Such a power series CR mapping $h : M \to M'$ is

- **(1)** *CR-invertible at* p_0 if its CR-horizontal part is a formal invertible map at 0.
- **(2)** *CR-submersive at* p_0 if its CR-horizontal part is a formal submersion at 0.
- **(3)** *CR-finite at* p_0 if its CR-horizontal part is finite at 0.
- **(4)** *CR-dominating at* p_0 if its CR-horizontal part is dominating at 0.
- **(5)** *CR-transversal at* p_0 if its CR-horizontal part is transversal at 0.

To conclude, as direct corollaries of Lemmas 4.1.3 and 4.1.4, we have

Lemma 4.1.17. *If a formal power series CR mapping $h : M \to M'$ is either CR-invertible, CR-submersive or CR-dominating, then it is CR-transversal. Furthermore, in the CR-equidimensional case $m' = m$, CR-invertibility implies* (*and is in fact equivalent to*) *CR submersiveness, which implies CR-finiteness, which implies CR-domination, which finally implies CR-transversality.*

§4.2. Segre nondegeneracy conditions for power series CR mappings

4.2.1. Preliminaries. After having introduced the five CR-horizontal nondegeneracy conditions on the power series CR mapping h, we may introduce *Segre nondegeneracy conditions* on h which are related to the reflection principle, which will be studied in the next chapters of Part II of this memoir. Consequently, *this Section 4.2 is of utmost importance to understand the whole memoir*.

As in §4.1.9, let $h^c : \mathscr{M} \to \mathscr{M}'$ be a complexified power series CR mapping, namely start with the fundamental power series identities in $\mathbb{C}[\![\zeta, t]\!]$:

$$\bar{g}_{j'}(\zeta, \Theta(\zeta, t)) - \Theta'_{j'}(\bar{f}(\zeta, \Theta(\zeta, t)), h(t)) \equiv 0, \tag{4.2.2}$$

for $j' = 1, \dots, d'$. As in (2.3.8), let $\underline{\mathscr{L}}_1, \dots, \underline{\mathscr{L}}_m$ be the basis of complexified $(0, 1)$ vector fields tangent to $\mathscr{M}$ given by

$$\underline{\mathscr{L}}_k = \frac{\partial}{\partial \zeta_k} + \sum_{j=1}^{d} \frac{\partial \Theta_j}{\partial \zeta_k}(\zeta, t) \, \frac{\partial}{\partial \xi_j}. \tag{4.2.3}$$

Let $\beta = (\beta_1, \dots, \beta_m) \in \mathbb{N}^m$. Applying the derivations $\underline{\mathscr{L}}^\beta = \underline{\mathscr{L}}_1^{\beta_1} \cdots \underline{\mathscr{L}}_m^{\beta_m}$ to (4.2.2) and without writing the arguments, we get

$$\underline{\mathscr{L}}^\beta \bar{g}_{j'} - \sum_{\gamma' \in \mathbb{N}^{m'}} \underline{\mathscr{L}}^\beta (\bar{f}^\gamma) \, \Theta'_{j', \gamma'}(h) \equiv 0, \tag{4.2.4}$$

for all $\beta \in \mathbb{N}^m$, for $j' = 1, \dots, d'$ and for $(t, \tau) \in \mathscr{M}$. By developping the derivations $\underline{\mathscr{L}}^\beta$, we observe that

Lemma 4.2.5. *For every $i' = 1, \dots, n'$ and every $\beta \in \mathbb{N}^m$, there exists a polynomial $P_{i', \beta}$ in the jet $J_\tau^{|\beta|} \bar{h}(\tau)$ with coefficients being power series in (t, τ) which depend only on the defining functions $\xi_j - \Theta_j(\zeta, t)$ of $\mathscr{M}$ and which can be computed by means of some combinatorial formula, such that*

$$\underline{\mathscr{L}}^\beta \bar{h}_{i'}(\tau) \equiv P_{i', \beta}(t, \tau, J_\tau^{|\beta|} \bar{h}(\tau)). \tag{4.2.6}$$

Proof. For $|\beta| = 1$, this follows by inspecting the coefficients of the vector fields $\underline{\mathscr{L}}_k$ in (4.2.4). By induction, assuming that such a formula holds for all $\beta \in \mathbb{N}^m$ with $|\beta| = k \geq 1$, applying the vector fields $\underline{\mathscr{L}}_1, \dots, \underline{\mathscr{L}}_m$ to (4.2.6) and using the chain rule, we get a similar type of formula for all $\beta \in \mathbb{N}^m$ with $|\beta| = k + 1$. Clearly, the coefficients of $P_{i', \beta}$ depend on the partial derivatives of the $\Theta_j(\zeta, t)$ and one can refine this statement by providing an explicit combinatorial formula (which we shall not need). $\square$

In formula (4.2.6), we have written the first two arguments of $P_{i', \beta}$ to be (t, τ). In fact, by inspecting the coefficients of the vector fields $\underline{\mathscr{L}}_k$, these first two arguments are (ζ, t). However, since we are always considering the variables (t, τ) to belong to $\mathscr{M}$, we have to replace everywhere τ by $\Theta(\zeta, t)$ or w by $\overline{\Theta}(z, t)$. Consequently, we can identify a function of (t, τ) with a function of (ζ, t) or with a function of (z, τ). Before going further,

we shall make the following convention which will allow us to make some slight abuse of notation on occasion.

Convention 4.2.7. Let $k, l \in \mathbb{N}$. On the complexification $\mathscr{M}$, we identify (notationally) a power series written under the complete form

$$R(t, \tau, J^k h(t), J^l \bar{h}(\tau)), \tag{4.2.8}$$

with a power series written under one of the following four forms

$$\begin{cases} (\mathbf{1}) \;\; R\left(t, \zeta, \Theta(\zeta, t), J^k h(t), J^l \bar{h}(\zeta, \Theta(\zeta, t))\right), \\ (\mathbf{2}) \;\; R\left(t, \zeta, J^k h(t), J^l \bar{h}(\zeta, \Theta(\zeta, t)\right), \\ (\mathbf{3}) \;\; R\left(z, \overline{\Theta}(z, \tau), \tau, J^k h(z, \overline{\Theta}(z, \tau)), J^l \bar{h}(\tau)\right), \\ (\mathbf{4}) \;\; R\left(z, \tau, J^k h(z, \overline{\Theta}(z, \tau)), J^l \bar{h}(\tau)\right). \end{cases} \tag{4.2.9}$$

Admitting this convention, applying Lemma 4.2.5 and using the chain rule, we deduce that for every $j' = 1, \dots, d'$ and every $\beta \in \mathbb{N}^m$, there exist formal power series $R'_{j',\beta} = R'_{j',\beta}(t, \tau, J_\tau^{|\beta|} : t')$ which depend only on the defining equations of $\mathscr{M}$ and on the defining equations of $\mathscr{M}'$ such that we can rewrite the equations (4.2.4) under the general form

$$\underline{\mathscr{L}}^\beta[\bar{g}_{j'}(\tau) - \Theta_{j'}(\bar{f}(\tau), h(t))] =: R'_{j',\beta}(t, \tau, J_\tau^{|\beta|} \bar{h}(\tau) : h(t)) \equiv 0, \tag{4.2.10}$$

for $j' = 1, \dots, d'$, where the identity "$\equiv 0$" is understood "on $\mathscr{M}$", namely as a formal power series identity in $\mathbb{C}[\![\zeta, t]\!]$ after replacing ξ by $\Theta(\zeta, t)$ or equivalently, as a formal power series identity in $\mathbb{C}[\![z, \tau]\!]$ after replacing w by $\overline{\Theta}(z, \tau)$. We shall constantly refer to these identities (4.2.10) in the sequel.

Importantly, the smoothness of the power series $R'_{j',\beta}$ is the minimum of the two smoothesses of M and of M'. This crucial remark will be the basis of all the various formal reflection principles developed in the next chapters of Part II.

For instance, the power series $R'_{j',\beta}$ are all complex analytic if M is real analytic and if M' is real algebraic, even if the power series CR mapping $h(t)$ was assumed to be purely formal and non convergent.

By a careful inspection of the application of the chain rule in the development of (4.2.5), we even see that each $R'_{j',\beta}$ is relatively polynomial with respect to the derivatives of positive order $(\partial_\tau^\alpha \bar{h}(\tau))_{1 \leq |\alpha| \leq |\beta|}$.

4.2.11. Segre nondegeneracy conditions for CR mappings. We are now ready to define nondegeneracy conditions for power series CR mappings which generalize the nondegeneracy conditions for generic submanifolds introduced in Chapter 3. In the equations (4.2.10), we replace $h(t)$ by a new independent variable $t' \in \mathbb{C}^{n'}$, we set $(t, \tau) = (0, 0)$, and we define the

following collection of power series

$$\Psi'_{j',\beta}(t') := \left[\underline{\mathscr{L}}^{\beta} \bar{g}_{j'} - \sum_{\gamma' \in \mathbb{N}^{m'}} \underline{\mathscr{L}}^{\beta}(\bar{f}^{\gamma'})\, \Theta'_{j',\gamma'}(t') \right]_{t=\tau=0}, \tag{4.2.12}$$

for $j' = 1, \ldots, d'$ and $\beta \in \mathbb{N}^m$. Here, for $\beta = 0$, we mean that $\Psi'_{j',0}(t') = -\Theta'_{j'}(0, t')$. Clearly, an equivalent way of defining $\Psi'_{j',\beta}(t')$ is as follows

$$\Psi'_{j',\beta}(t') := R'_{j',\beta}(0, 0, J_{\tau}^{|\beta|}\bar{h}(0) : t'). \tag{4.2.13}$$

Now, just before introducing the desired five definitions, we make the following crucial heuristic remark. When $n = n'$, $M = M'$ and $h = \mathrm{Id}$, we drop the dashes and we denote by T (instead of t') the new independent variable, hence we may compute

$$\begin{cases} \Psi_{j,\beta}(T) &= \left[\underline{\mathscr{L}}^{\beta} \xi_j - \sum_{\gamma \in \mathbb{N}^m} \underline{\mathscr{L}}^{\beta}(\zeta)^{\gamma}\, \Theta_{j,\gamma}(T) \right]_{t=\tau=0} \\ &= \left[\underline{\mathscr{L}}^{\beta} \Theta_j(\zeta, t) - \beta!\, \Theta_{j,\beta}(T) \right]_{t=\tau=0} \\ &= \beta!\, [\Theta_{j,\beta}(0) - \Theta_{j,\beta}(T)]. \end{cases} \tag{4.2.14}$$

Consequently, we see that up to an affine combination, we recover with $\Psi_{j,\beta}(T)$ the components of the infinite Segre mapping (3.1.3). Furthermore, using the computation (4.2.14), we may check easily that the following five nondegeneracy conditions just below are a generalization to CR mappings of the five nondegeneracy conditions introduced in Section 3.2 for generic submanifolds of $\mathbb{C}^n$.

Definition 4.2.15. The formal, algebraic or analytic power series CR mapping h is called

(1) *Levi-nondegenerate* at the origin if the mapping

$$t' \mapsto \left(R'_{j',\beta}(0, 0, J_{\tau}^{|\beta|}\bar{h}(0) : t') \right)_{1 \leq j' \leq d',\, |\beta| \leq 1} \tag{4.2.16}$$

is of rank n' at $t' = 0$. This condition requires the dimensional inequality $d'(m+1) \leq n'$.

(2) ℓ_1-*finitely nondegenerate* at the origin if there exists an integer ℓ such that the mapping

$$t' \mapsto \left(R'_{j',\beta}(0, 0, J_{\tau}^{|\beta|}\bar{h}(0) : t') \right)_{1 \leq j' \leq d',\, |\beta| \leq \ell} \tag{4.2.17}$$

is of rank n' at $t' = 0$, and if ℓ_1 is the smallest such integer ℓ.

(3) ℓ_1-*Segre finite* at the origin if there exists an integer ℓ such that the mapping

$$t' \mapsto \left(R'_{j',\beta}(0, 0, J_{\tau}^{|\beta|}\bar{h}(0) : t') \right)_{1 \leq j' \leq d',\, |\beta| \leq \ell} \tag{4.2.18}$$

is locally finite at $t' = 0$, and if ℓ_1 is the smallest such integer.

(4) ℓ_1-*Segre nondegenerate* if there exist an integer ℓ, integers ${j'_*}^1, \dots, {j'_*}^{n'}$ with $1 \leq {j'_*}^{i'} \leq d'$ for $i' = 1, \dots, n'$ and multi-indices $\beta_*^1, \dots, \beta_*^{n'}$ with $|\beta_*^{i'}| \leq \ell$ for $i' = 1, \dots, n'$, such that the determinant

(4.2.19)
$$\det \left(\frac{\partial R'_{{j'_*}^{i'_1}, \beta_*^{i'_1}}}{\partial t'_{i'_2}} \left(z, \overline{\Theta}(z,0), 0, 0, J^{|\beta_*^{i'_1}|} \bar{h}(0) : h(z, \overline{\Theta}(z,0)) \right) \right)_{1 \leq i'_1, i'_2 \leq n'}$$

does not vanish identically in $\mathbb{C}[\![z]\!]$, and if ℓ_1 is the smallest such integer ℓ.

(5) ℓ_1-*holomorphically nondegenerate* at the origin if there exists an integer ℓ, integers ${j'_*}^1, \dots, {j'_*}^{n'}$ with $1 \leq {j'_*}^{i'} \leq d'$ for $i' = 1, \dots, n'$ and multiindices $\beta_*^1, \dots, \beta_*^{n'}$ with $|\beta_*^{i'}| \leq \ell$ for $i' = 1, \dots, n'$, such that the determinant

$$\det \left(\frac{\partial R'_{{j'_*}^{i'_1}, \beta_*^{i'_1}}}{\partial t'_{i'_2}} \left(0, 0, 0, 0, J^{|\beta_*^{i'_1}|} \bar{h}(0) : h(t) \right) \right)_{1 \leq i'_1, i'_2 \leq n'} \tag{4.2.20}$$

does not vanish identically in $\mathbb{C}[\![t]\!]$, and if ℓ_1 is the smallest such integer ℓ.

These five nondegeneracy conditions for power series CR mappings are of utmost importance for the reflection principle and they will be studied in Part II of this memoir. Some of them are suggested by K. Diederich and S.M. Webster in [9]. The notion of ℓ_1-finite nondegeneracy unifies conditions which appear in the works [1], [8], [14], [17], [22], [23], [27], [30], [34], [35], [36].

We notice that Levi nondegeneracy implies finite nondegeneracy which implies Segre finiteness. However, Segre finiteness and Segre nondegeneracy are totally independent conditions, as shown by the following two examples.

Example 4.2.21. We already know that essential finiteness of M does not imply Segre nondegeneracy, hence simply by considering the identity map of the hypersurface $v = z_1 \bar{z}_1 (1 + z_1 \bar{z}_2)$ of $\mathbb{C}^3$, we see that **(3)** does not imply **(4)** in Definition 4.2.15 just above.

On the other hand, it is easy to check that the mapping $(z_1, w) \mapsto (z_1, 0, w)$ from $M : \bar{w} = w + i\, z_1^2 \bar{z}_1^2$ to $M' : \bar{w}' = w' + i[{z'_1}^2 \bar{z}_1'^2 + z'_1 \bar{z}_2'^2 + \bar{z}'_1 {z'_2}^2]$ is Segre finite at the origin but it is not Segre nondegenerate.

We also mention that the above five nondegeneracy conditions are meaningful for sufficiently smooth local CR mappings, by considering the Taylor series of M at p_0, of h at p_0 and of M' at p'_0.

4.2.22. Necessary conditions. Coming back to (4.2.12), noticing that $\bar{f}(0) = 0$, we see that the constant $\underline{\mathscr{L}}^\beta(\bar{f}^\gamma)|_{t=\tau=0}$ vanishes for $|\gamma| > |\beta|$,

whence every $\Psi'_{j',\beta}(t')$ is an affine combination with constant coefficients of some (but not all) of the power series $\Theta'_{j'_1,\beta'_1}(t')$, for $1 \leq j'_1 \leq d'$ and $|\beta'_1| \leq |\beta|$. Based on this observation, we deduce immediately properties **(1)**, **(2)**, **(3)** and **(5)** of Lemma 4.2.23 just below, which states necessary conditions for h to be nondegenerate in each one of the above five senses. The proof of **(4)** is also elementary.

Lemma 4.2.23. *Let $h : M \to M'$ be a power series CR mapping as above.*

- **(1)** *If h is Levi-nondegenerate at the origin, then M' is Levi-nondegenerate at the origin.*
- **(2)** *If h is ℓ_1-finitely nondegenerate at the origin, then M' is ℓ'_0-finitely nondegenerate at the origin for some $\ell'_0 \leq \ell_1$.*
- **(3)** *If h is ℓ_1-essentially finite at the origin, then M' is ℓ'_0-essentially finite at the origin for some $\ell'_0 \leq \ell_1$.*
- **(4)** *If h is ℓ_1-Segre nondegenerate at the origin, then M' is ℓ'_0-Segre nondegenerate at the origin for some $\ell'_0 \leq \ell_1$.*
- **(5)** *If h is ℓ_1-holomorphically nondegenerate at the origin, then M' is ℓ'_0-holomorphically nondegenerate at the origin for some $\ell'_0 \leq \ell_1$.*

§4.3. Study of CR-transversal power series CR mappings

We now show that CR-transversality of the mapping h insures that it enjoys exactly the same nondegeneracy condition as the target M'. The condition of CR transversality is much more general than the condition of domination, because for instance it does not impose any dimensional inequality between m and m' or between n and n'. We shall end this section with the proof of the following theorem, which is quite long and technical, but of central importance. Here, we assume that M and M' are either algebraic or analytic, and that h is algebraic, analytic or even formal. According to Lemma 4.1.17, the following lemma applies to many situtations.

Theorem 4.3.1. *Assume that h is CR-transversal at p_0. Then the following five properties hold:*

- **(1)** *If M' is Levi nondegenerate at p'_0, then h is ℓ_1-finitely nondegenerate at p_0 for some $\ell_1 \geq 1$.*
- **(2)** *If M' is ℓ'_0-finitely nondegenerate at p'_0, then h is ℓ_1-finitely nondegenerate at p_0 for some $\ell_1 \geq \ell'_0$.*
- **(3)** *If M' is ℓ'_0-essentially finite at p'_0, then h is ℓ_1-Segre finite at p_0 for some $\ell_1 \geq \ell'_0$.*
- **(4)** *If M' is ℓ'_0-Segre nondegenerate at p'_0, then h is ℓ_1-Segre nondegenerate at p_0 for some $\ell_1 \geq \ell'_0$.*
- **(5)** *If M' is ℓ'_0-holomorphically nondegenerate at p'_0, and if moreover h is transversal at p_0, then h is ℓ_1-holomorphically nondegenerate at p_0 for some $\ell_1 \geq \ell'_0$.*

Proof. In order to simplify a little bit the notations and the computations, we shall assume that the coordinates (z, w) for M near p_0 and (z', w') for

M' near p'_0 are normal. Thus, the Segre variety $S_{\bar{p}_0}$ is given by $\{(z,0)\}$ instead of $\{(z,\overline{\Theta}(z,0))\}$ and similarly for $S'_{\bar{p}'_0}$, which will slightly simplify the presentation of the formal calculations below.

We remind that by the fundamental definition (4.2.10), the functions $R'_{j',\beta}(t,\tau,J^{|\beta|}\bar{h}(\tau)\ :\ t')$ are the power series development of $\underline{\mathscr{L}}^{\beta} r'_{j'}(t',\bar{h}(\tau))$. Here, the integer j' satisfies $1 \leq j' \leq d'$ and the multiindex β belongs to $\mathbb{N}^m$.

We consider the gradient of $R'_{j',\beta}$ with respect to the distinguished variable t':

(4.3.2)
$$\nabla_{t'}\, R'_{j',\beta}(t,\tau,J^{|\beta|}\bar{h}(\tau)\,:\,t') := \left(\frac{\partial R'_{j',\beta}}{\partial t'_i}(t,\tau,J^{|\beta|}\bar{h}(\tau)\,:\,t')\right)_{1\leq i'\leq n'},$$

considered as a vertical vector, *i.e.* as a $n'\times 1$ matrix. Also, we shall work in the sequel with a fixed j' and we shall consider the expression

$$\left(\nabla_{t'}\, R'_{j',\beta}(t,\tau,J^{|\beta|}\bar{h}(\tau)\,:\,t')\right)_{\beta\in\mathbb{N}^m} \tag{4.3.3}$$

as an $n'\times\infty$ matrix. We introduce a new notation. Let $\nu\in\mathbb{N}$ with $\nu\geq 1$, let $x=(x_1,\ldots,x_\nu)\in\mathbb{K}^\nu$, let $\mu\in\mathbb{N}$ with $\mu\geq 1$ and let $A(x)$ by a $\mu\times\infty$ matrix of power series. By $\mathrm{genMrk}\,A(x)$, we denote the generic rank of the matrix $A(x)$, which is defined to be the largest integer $\kappa\leq\mu$ such that there exists a $\kappa\times\kappa$ minor of $A(x)$ which does not vanish identically as a power series in x. The letter "M" in genMrk stands for the word "Matrix". The notation genMrk should not be confused with the notation $\mathrm{genrk}_{\mathbb{C}}$ introduced in §2.1.5.

In the sequel, we shall in fact put $(t,\tau):=(0,0)$ in $R'_{j',\beta}$. Then, the generic rank of the matrix

$$\mathrm{genMrk}\,\left(\nabla_{t'}\, R'_{j',\beta}(0,0,J^{|\beta|}\bar{h}(0)\,:\,t')\right)_{\beta\in\mathbb{N}^m} \tag{4.3.4}$$

is of course the largest integer κ' such that there exists a $\kappa'\times\kappa'$ minor of (4.3.4) which does not vanish identically as a power series in t'. In the case where we put $t'=0$, we even do not have to speak of generic rank, hence we simply denote by

$$\mathrm{Mrk}\,\left(\nabla_{t'}\, R'_{j',\beta}(0,0,J^{|\beta|}\bar{h}(0)\,:\,0)\right)_{\beta\in\mathbb{N}^m} \tag{4.3.5}$$

the rank of a $n'\times\infty$ constant matrix. Of course, we use the same notations genMrk and Mrk for the truncated matrices where we allow only $|\beta|\leq k$, for some integer $k\in\mathbb{N}$.

First of all we prove part **(2)** of Theorem 4.3.1, which contains of course part **(1)**. We state a technical lemma which holds essentially in the case of codimension $d=1$.

Lemma 4.3.6. *Fix j' with $1\leq j'\leq d'$. Let $n'_{j'}$ be the integer defined by*

$$n'_{j'} := \mathrm{Mrk}\,\left(\nabla_{t'}\,\Theta'_{j',\gamma'}(0)\right)_{\gamma'\in\mathbb{N}^{m'}}. \tag{4.3.7}$$

Assume that h is CR-transversal at p_0. Then we also have

$$\mathrm{Mrk}\,\big(\nabla_{t'}\,R'_{j',\beta}(0,0,J^{|\beta|}\bar{h}(0):\,0)\big)_{\beta\in\mathbb{N}^m}=n'_{j'}. \tag{4.3.8}$$

We first show that this technical lemma implies part **(2)** of the theorem. Indeed, by the definition of $R'_{j',\beta}$ (*see* the expression (4.2.5)) $\nabla_{t'}\,R'_{j',\beta}(0,0,J^{|\beta|}\bar{h}(0)\,:\,0)$ is a linear combination with complex coefficients of the vectors $\nabla_{t'}\,\Theta'_{j',\gamma'}(0)$, for $|\gamma'|\leq|\beta|$, namely more precisely

$$\nabla_{t'}\,R'_{j',\beta}(0,0,J^{|\beta|}\bar{h}(0):\,0)=-\sum_{\gamma'\in\mathbb{N}^{m'}}\underline{\mathscr{L}}^{\beta}(\bar{f}^{\gamma'})(0)\,[\nabla_{t'}\,\Theta'_{j',\gamma'}(0)]. \tag{4.3.9}$$

We notice that this sum is in fact truncated, with $|\gamma'|\leq|\beta|$. Consequently, we deduce that

$$\mathrm{Span}_{\mathbb{C}}\,\big\{\nabla_{t'}\,R'_{j',\beta}(0,0,J^{|\beta|}\bar{h}(0):\,0):\,\beta\in\mathbb{N}^m\big\} \tag{4.3.10}$$

is automatically contained in

$$\mathrm{Span}_{\mathbb{C}}\,\Big\{\nabla_{t'}\,\Theta'_{j',\gamma'}(0):\,\gamma'\in\mathbb{N}^{m'}\Big\}. \tag{4.3.11}$$

But thanks to the rank condition stated in Lemma 4.3.6 (to be proved below), we deduce that these two subspaces must coincide. In other words, for each $j'=1,\dots,d'$, there exists integers $\ell_{1,j'}$ and $\ell'_{0,j'}$ with $\ell_{1,j'}\geq\ell'_{0,j'}$ such that

$$\begin{cases}\mathrm{Span}_{\mathbb{C}}\,\big\{\nabla_{t'}\,R'_{j',\beta}(0,0,J^{|\beta|}\bar{h}(0):\,0):\,|\beta|\leq\ell_{1,j'}\big\}=\\ \qquad\qquad\mathrm{Span}_{\mathbb{C}}\,\big\{\nabla_{t'}\,\Theta'_{j',\gamma'}(0):\,|\gamma'|\leq\ell'_{0,j'}\big\}.\end{cases} \tag{4.3.12}$$

Finally, by assumption of ℓ'_0-finite nondegeneracy of M' at p'_0, the vector space spanned by the collection of terms in the right hand sides of (4.3.12), when $j'=1,\dots,d'$, is equal to the whole of $\mathbb{C}^{n'}$, with of course $\ell'_0=\max(\ell'_{0,1},\dots,\ell'_{0,n'})$. It follows that the vector space spanned by the collection of terms in the left hand sides of (4.3.12), when $j'=1,\dots,d'$, is also equal to the whole of $\mathbb{C}^{n'}$. In conclusion, setting of course $\ell_1=\max(\ell_{1,1},\dots,\ell_{1,n'})\geq\ell'_0$, we have shown that h is ℓ_1-finitely nondegenerate at p_0. It remains to establish the technical lemma.

Proof. So we fix j'. We proceed by contradiction. Assume that the rank κ' of the $n'\times\infty$ matrix

$$\big(\nabla_{t'}\,R'_{j',\beta}(0,0,J^{|\beta|}\bar{h}(0):\,0)\big)_{\beta\in\mathbb{N}^m} \tag{4.3.13}$$

is stricly smaller than $n'_{j'}$, namely $\kappa'\leq n'_{j'}-1$. Equivalently, there exist multiindices $\beta_1,\dots,\beta_{\kappa'}\in\mathbb{N}^m$ such that for every multiindex $\beta\in\mathbb{N}^m$ different from $\beta_1,\dots,\beta_{\kappa'}$, there exist constanst $\Lambda^1_\beta,\dots,\Lambda^{\kappa'}_\beta$ such that we can write

$$\begin{cases}\nabla_{t'}\,R'_{j',\beta}(0,0,J^{|\beta|}\bar{h}(0):\,0)=\Lambda^1_\beta\,\big[\nabla_{t'}\,R'_{j',\beta_1}(0,0,J^{|\beta|}\bar{h}(0):\,0)\big]+\cdots+\\ \qquad\qquad\qquad+\Lambda^{\kappa'}_\beta\,\Big[\nabla_{t'}\,R'_{j',\beta_{\kappa'}}(0,0,J^{|\beta|}\bar{h}(0):\,0)\Big].\end{cases} \tag{4.3.14}$$

Now, replacing in these linear combinations the terms $\nabla_{t'} R'_{j',\beta}$ by their explicit expression (4.3.9), we obtain

(4.3.15)
$$\left\{\begin{array}{l} \displaystyle\sum_{\gamma'\in\mathbb{N}^{m'}} \underline{\mathscr{L}}^{\beta}(\bar{f}^{\gamma'})(0)\ [\nabla_{t'}\,\Theta'_{j',\gamma'}(0)] = \\ \qquad\qquad \displaystyle\Lambda^1_\beta \left(\sum_{\gamma'\in\mathbb{N}^{m'}} \underline{\mathscr{L}}^{\beta_1}(\bar{f}^{\gamma'})(0)\,[\nabla_{t'}\,\Theta'_{j',\gamma'}(0)]\right) + \cdots + \\ \qquad\qquad \displaystyle\Lambda^{\kappa'}_\beta \left(\sum_{\gamma'\in\mathbb{N}^{m'}} \underline{\mathscr{L}}^{\beta_{\kappa'}}(\bar{f}^{\gamma'})(0)\,[\nabla_{t'}\,\Theta'_{j',\gamma'}(0)]\right). \end{array}\right.$$

As we are in normal coordinates, the conjugate complexified Segre variety passing through the origin is given by $\underline{\mathscr{L}}_0 = \{(0,0,\zeta,0)\}$ in (z,w,ζ,ξ) coordinates. Let $\gamma' \in \mathbb{N}^{m'}$. The restriction of $\bar{f}^{\gamma'}$ to $\underline{\mathscr{L}}_0$ is given by $\bar{f}^{\gamma'}(\zeta,0)$. We develope its Taylor series with respect to the powers of ζ as follows

$$\bar{f}^{\gamma'}(\zeta,0) = \sum_{\beta\in\mathbb{N}^m} \bar{f}_{\gamma',\beta}\,\frac{\zeta^\beta}{\beta!}, \tag{4.3.16}$$

where the $\bar{f}_{\gamma',\beta}$ are constants in $\mathbb{C}$. Since the coordinates are normal, with the usual vector fields $\underline{\mathscr{L}}_k$ given by

$$\underline{\mathscr{L}}_k = \frac{\partial}{\partial\zeta_k} + \sum_{j=1}^{d} \frac{\partial\Theta_j}{\partial\zeta_k}(\zeta,t)\,\frac{\partial}{\partial\xi_j}, \tag{4.3.17}$$

taking into account that $\Theta_j(\zeta,0,w) \equiv \Theta_j(0,z,w) \equiv 0$ (*cf.* Theorem 2.1.32), we immediately see that the constants $\bar{f}_{\gamma',\beta}$ are simply given by

$$\bar{f}_{\gamma',\beta} = \underline{\mathscr{L}}^{\beta}(\bar{f}^{\gamma'})(0,0,0,0). \tag{4.3.18}$$

We may now rewrite the expression (4.3.15) as follows

(4.3.19)
$$\sum_{\gamma'\in\mathbb{N}^{m'}} \left(\bar{f}_{\gamma',\beta} - \Lambda^1_\beta\,\bar{f}_{\gamma',\beta_1} - \cdots - \Lambda^{\kappa'}_\beta\,\bar{f}_{\gamma',\beta_{\kappa'}}\right)\,\left[\nabla_{t'}\,\Theta'_{j',\gamma'}(0)\right] = 0.$$

Let us rewrite this expression temporarily as a linear system of the form

$$\sum_{\gamma'\in\mathbb{N}^{m'}} \overline{F}_{\beta,\gamma'}\,\left[\nabla_{t'}\,\Theta'_{j',\gamma'}(0)\right] = 0, \tag{4.3.20}$$

where the $\overline{F}_{\beta,\gamma'}$ are complex constant. Now, we use the assumption (4.3.7). Since the rank of the $n' \times \infty$ matrix $(\nabla_{t'}\,\Theta'_{j',\gamma'}(0))_{\gamma'\in\mathbb{N}^{m'}}$ is equal to $n'_{j'}$ it follows that after making some linear combinations between the lines of the system (4.3.20) that there exist $n'_{j'}$ distinct multiindices $\gamma'_1,\ldots,\gamma'_{n'_{j'}} \in \mathbb{N}^{m'}$

such that for $i' = 1, \dots, n'_{j'}$, we can solve

$$\overline{F}_{\beta,\gamma'_{i'}} = \sum_{\gamma' \neq \gamma'_1, \dots, \gamma'_{n'_{j'}}} A'_{i',\gamma'} \, \overline{F}_{\beta,\gamma'}, \tag{4.3.21}$$

where the $A'_{i',\gamma'}$ are complex constants.

We now replace the $\overline{F}_{\beta,\gamma'}$ by their values, which yields for $\beta \neq \beta_1, \dots, \beta_{\kappa'}$ and for $i' = 1, \dots, n'_{j'}$ the following equalities

$$\begin{cases} \bar{f}_{\gamma'_{i'},\beta} - \Lambda^1_\beta \, \bar{f}_{\gamma'_{i'},\beta_1} - \dots - \Lambda^{\kappa'}_\beta \, \bar{f}_{\gamma'_{i'},\beta_{\kappa'}} = \\ = \displaystyle\sum_{\gamma' \neq \gamma'_1, \dots, \gamma'_{n'_{j'}}} A'_{i',\gamma'} \left[\bar{f}_{\gamma',\beta} - \Lambda^1_\beta \, \bar{f}_{\gamma',\beta_1} - \dots - \Lambda^{\kappa'}_\beta \, \bar{f}_{\gamma',\beta_{\kappa'}} \right]. \end{cases} \tag{4.3.22}$$

We can now mix linearly the left and the right hand sides to obtain for $i' = 1, \dots, n'_{j'}$ and for $\beta \neq \beta_1, \dots, \beta_{\kappa'}$

(4.3.23)

$$\begin{cases} \bar{f}_{\gamma'_{i'},\beta} - \displaystyle\sum_{\gamma' \neq \gamma'_1, \dots, \gamma'_{n'_{j'}}} A'_{i',\gamma'} \, \bar{f}_{\gamma',\beta} = \Lambda^1_\beta \left[\bar{f}_{\gamma'_{i'},\beta_1} - \sum_{\gamma' \neq \gamma'_1, \dots, \gamma'_{n'_{j'}}} A'_{i',\gamma'} \, \bar{f}_{\gamma',\beta_1} \right] \\ \qquad + \dots + \\ \qquad \Lambda^{\kappa'}_\beta \left[\bar{f}_{\gamma'_{i'},\beta_{\kappa'}} - \displaystyle\sum_{\gamma' \neq \gamma'_1, \dots, \gamma'_{n'_{j'}}} A'_{i',\gamma'} \, \bar{f}_{\gamma',\beta_{\kappa'}} \right]. \end{cases}$$

On the other hand, by the definition (4.3.16) of the constants $\bar{f}_{\gamma',\beta}$, we can develope the following expression in power series of ζ

(4.3.24)

$$\begin{cases} \bar{f}^{\gamma'_i}(\zeta, 0) - \displaystyle\sum_{\gamma' \neq \gamma'_1, \dots, \gamma'_{n'_{j'}}} A'_{i',\gamma'} \, \bar{f}^{\gamma'}(\zeta, 0) = \\ \displaystyle\sum_{\beta \neq \beta_1, \dots, \beta_{\kappa'}} \left(\bar{f}_{\gamma'_{i'},\beta} - \sum_{\gamma' \neq \gamma'_1, \dots, \gamma'_{n'_{j'}}} A'_{i',\gamma'} \, \bar{f}_{\gamma',\beta} \right) \frac{\zeta^\beta}{\beta!} + \\ + \left(\bar{f}_{\gamma'_{i'},\beta_1} - \displaystyle\sum_{\gamma' \neq \gamma'_1, \dots, \gamma'_{n'_{j'}}} A'_{i',\gamma'} \, \bar{f}_{\gamma',\beta_1} \right) \frac{\zeta^{\beta_1}}{\beta_1!} + \dots + \\ + \left(\bar{f}_{\gamma'_{i'},\beta_{\kappa'}} - \displaystyle\sum_{\gamma' \neq \gamma'_1, \dots, \gamma'_{n'_{j'}}} A'_{i',\gamma'} \, \bar{f}_{\gamma',\beta_{\kappa'}} \right) \frac{\zeta^{\beta_{\kappa'}}}{\beta_{\kappa'}!}. \end{cases}$$

Now, we introduce the following new complex constants for $i' = 1, \dots, n'_{j'}$

$$
\text{(4.3.25)} \qquad \begin{cases} \Pi_{i',1} := \bar{f}_{\gamma'_{i'},\beta_1} - \displaystyle\sum_{\gamma' \neq \gamma'_1, \dots, \gamma'_{n'_{j'}}} A'_{i',\gamma'} \, \bar{f}_{\gamma',\beta_1}, \\ \qquad \cdots\cdots\cdots \\ \Pi_{i',\kappa'} := \bar{f}_{\gamma'_{i'},\beta_{\kappa'}} - \displaystyle\sum_{\gamma' \neq \gamma'_1, \dots, \gamma'_{n'_{j'}}} A'_{i',\gamma'} \, \bar{f}_{\gamma',\beta_{\kappa'}}, \end{cases}
$$

and we use the preceding relations (4.3.23) to rewrite (4.3.24) more simply as follows, for $i' = 1, \dots, n'_{j'}$:

(4.3.26)

$$
\begin{cases} \bar{f}^{\gamma'_{i'}}(\zeta, 0) - \displaystyle\sum_{\gamma' \neq \gamma'_1, \dots, \gamma'_{n'_{j'}}} A'_{i',\gamma'} \, \bar{f}^{\gamma'}(\zeta, 0) = \\ \quad = \displaystyle\sum_{\beta \neq \beta_1, \dots, \beta_{\kappa'}} \Big[\Lambda^1_\beta \, \Pi_{i',1} + \cdots + \Lambda^{\kappa'}_\beta \, \Pi_{i',\kappa'} \Big] \, \frac{\zeta^\beta}{\beta!} + \Pi_{i',1} \, \frac{\zeta^{\beta_1}}{\beta_1!} + \cdots + \Pi_{i',\kappa'} \, \frac{\zeta^{\beta_{\kappa'}}}{\beta_{\kappa'}!} \\ \quad = \Pi_{i',1} \left(\dfrac{\zeta^{\beta_1}}{\beta_1!} + \displaystyle\sum_{\beta \neq \beta_1, \dots, \beta_{\kappa'}} \Lambda^1_\beta \, \frac{\zeta^\beta}{\beta!} \right) + \cdots + \Pi_{i',\kappa'} \left(\dfrac{\zeta^{\beta_{\kappa'}}}{\beta_{\kappa'}!} + \displaystyle\sum_{\beta \neq \beta_1, \dots, \beta_{\kappa'}} \Lambda^{\kappa'}_\beta \, \frac{\zeta^\beta}{\beta!} \right) \\ \quad =: \Pi_{i',1} \, G_1(\zeta) + \cdots + \Pi_{i',\kappa'} \, G_{\kappa'}(\zeta), \end{cases}
$$

where the power series $G_1(\zeta), \dots, G_{\kappa'}(\zeta)$ are defined by the last equality. Now, we use the assumption $\kappa' \leq n'_{j'} - 1$. Since there are striclty less than $n'_{j'}$ functions G in (4.3.26), it follows that there exist complex constants $\mu_1, \dots, \mu_{n'_{j'}}$ not all zero such that

$$
\text{(4.3.27)} \quad \begin{cases} 0 \equiv \mu_1 \left(\bar{f}^{\gamma'_1}(\zeta, 0) - \displaystyle\sum_{\gamma' \neq \gamma'_1, \dots, \gamma'_{n'_{j'}}} A_{1,\gamma'} \, \bar{f}^{\gamma'}(\zeta, 0) \right) + \cdots + \\ \qquad + \mu_{n'_{j'}} \left(\bar{f}^{\gamma'_{n'_{j'}}}(\zeta, 0) - \displaystyle\sum_{\gamma' \neq \gamma'_1, \dots, \gamma'_{n'_{j'}}} A_{n'_{j'},\gamma'} \, \bar{f}^{\gamma'}(\zeta, 0) \right), \end{cases}
$$

and this last equality clearly contradicts the assumption that h is CR-transversal at p_0.

The proofs of Lemma 4.3.6 and of parts **(1)** and **(2)** of Theorem 4.3.1 are complete. $\square$

We now prove part **(3)** of Theorem 4.3.1. We also proceed by contradiction. Suppose that the ideal

$$
\text{(4.3.28)} \qquad \big\langle R'_{j',\beta}(0, 0, J^{|\beta|} \bar{h}(0) : t') \big\rangle_{1 \leq j' \leq d', \, \beta \in \mathbb{N}^m}
$$

is of infinite codimension in $\mathscr{A}_{\mathbb{C}}\{t'\}$ or in $\mathbb{C}\{t'\}$. By the Nullstellensatz, it follows that there exists a nonzero algebraic or analytic piece of curve passing through the origin

$$\mathbb{C} \ni s' \mapsto t'(s') \in \mathbb{C}^{n'}, \tag{4.3.29}$$

namely $t'(s') \in \mathscr{A}_{\mathbb{C}}\{s'\}^{n'}$ or $t'(s') \in \mathbb{C}\{s'\}^{n'}$, such that

$$R'_{j',\beta}(0, 0, J^{|\beta|}\bar{h}(0) : t'(s')) \equiv 0, \tag{4.3.30}$$

for all $j' = 1, \dots, d'$ and all $\beta \in \mathbb{N}^m$. Replacing the $R'_{j',\beta}$ by their definition (4.2.10), this means that

$$\underline{\mathscr{L}}^{\beta}\, \bar{g}_{j'}(0) - \sum_{\gamma' \in \mathbb{N}^{m'}} \underline{\mathscr{L}}^{\beta}(\bar{f}^{\gamma'})(0)\, \Theta'_{j',\gamma'}(t'(s')) \equiv 0, \tag{4.3.31}$$

for $j' = 1, \dots, d'$. But since the coordinates (z, w) and (z', w') are normal, we claim that we have

$$\underline{\mathscr{L}}^{\beta}\, \bar{g}_{j'}(0) = 0 \tag{4.3.32}$$

for all $\beta \in \mathbb{N}^m$ and all $j' = 1, \dots, d'$. Indeed, setting $t = 0$ in the fundamental power series identities

$$\bar{g}_{j'}(\zeta, \Theta(\zeta, t)) \equiv \Theta'_{j'}(\bar{f}(\zeta, \Theta(\zeta, t)), h(t)), \tag{4.3.33}$$

we get thanks to the normality of coordinates

$$\bar{g}_{j'}(\zeta, 0) \equiv \Theta'_{j'}(\bar{f}(\zeta, 0), 0) \equiv 0, \tag{4.3.34}$$

hence

$$\underline{\mathscr{L}}^{\beta}\, \bar{g}_{j'}(0) = \partial_{\zeta}^{\beta} \bar{g}_{j'}(\zeta, 0)|_{\zeta=0} = 0, \tag{4.3.35}$$

as claimed. Developing

$$\bar{f}^{\gamma'}(\zeta, 0) = \sum_{\beta \in \mathbb{N}^m} \bar{f}_{\gamma',\beta}\, \frac{\zeta^{\beta}}{\beta!}, \tag{4.3.36}$$

where (again thanks to normal coordinates)

$$\bar{f}_{\gamma',\beta} = \underline{\mathscr{L}}^{\beta}\, \bar{f}^{\gamma'}(0), \tag{4.3.37}$$

we can now rewrite the expression (4.3.31) in under the simpler form

$$\sum_{\gamma' \in \mathbb{N}^{m'}} \bar{f}_{\gamma',\beta}\, \Theta'_{j',\gamma'}(t'(s')) \equiv 0. \tag{4.3.38}$$

Because M' is essentially finite at p'_0, there exists at smallest one integer j'_0 with $1 \leq j'_0 \leq d'$ such that not all $\Theta'_{j'_0,\gamma'}(t'(s'))$ vanish identically, for $\gamma' \in \mathbb{N}^{m'}$. Hence there exists $s'_0 \in \mathbb{C}$ arbitrarily close to the origin such that the infinite family of complex constants $(\Theta'_{j'_0,\gamma'}(t'(s'_0)))_{\gamma' \in \mathbb{N}^{m'}}$ are not all zero. We put

$$\theta'_{\gamma'} := \Theta'_{j'_0,\gamma'}(t'(s'_0)) \in \mathbb{C}. \tag{4.3.39}$$

Setting $s' := s'_0$ in (4.3.38), we therefore get for all $\beta \in \mathbb{N}^m$ a relation of the form

$$\sum_{\gamma' \in \mathbb{N}^{m'}} \bar{f}_{\gamma',\beta}\, \theta'_{\gamma'} = 0, \tag{4.3.40}$$

which yields after integrating with respect to ζ the formal identity

$$\sum_{\gamma' \in \mathbb{N}^{m'}} \theta'_{\gamma'}\, \bar{f}^{\gamma'}(\zeta, 0) \equiv 0. \tag{4.3.41}$$

But this clearly contradicts the CR-transversality of h at p_0.

The proof of part **(3)** of Theorem 4.3.1 is complete.

We now prove part **(4)** of Theorem 4.3.1. The proof has some similarities with the proof of part **(2)**, but is a little bit more technical. We use the notations introduced in the beginning of the proof of Theorem 4.3.1.

It follows directly from Section 3.2 (*cf.* especially (3.2.47) and Lemma 3.2.49) that in normal coordinates, and using the gradient notation $\nabla_{t'}$, then M' is Segre nondegenerate if and only if

$$\mathrm{genMrk}\, \big(\nabla_{t'}\, \Theta'_{j',\gamma'}(z', 0)\big)_{1 \leq j' \leq d',\, \gamma' \in \mathbb{N}^{m'}} = n'. \tag{4.3.42}$$

Notice that here we let the integer j' vary from 1 to d', but in the following lemma, we shall fix j'.

Lemma 4.3.43. *Fix j' with $1 \leq j' \leq d'$. Let $n'_{j'}$ be the integer defined by*

$$n'_{j'} := \mathrm{genMrk}\, \big(\nabla_{t'}\, \Theta'_{j',\gamma'}(z', 0)\big)_{\gamma' \in \mathbb{N}^{m'}}\,. \tag{4.3.44}$$

Assume that h is CR-transversal at p_0. Then we also have

$$\mathrm{genMrk}\, \big(\nabla_{t'}\, R'_{j',\beta}(z, 0, 0, 0, J^{|\beta|}\bar{h}(0) :\, h(z, 0))\big)_{\beta \in \mathbb{N}^m} = n'_{j'}. \tag{4.3.45}$$

We first show that this technical lemma implies part **(4)** of Theorem 4.3.1. Indeed, by the definitions (4.2.5) and (4.2.10) of $R'_{j',\beta}$, after specifiying on the Segre chain $\mathscr{S}_0 = \{(z, 0, 0, 0)\}$, we have

$$\begin{cases} \nabla_{t'}\, R'_{j',\beta}\, (z, 0, 0, 0, J^{|\beta|}\bar{h}(0) :\, h(z, 0)) = \\ \qquad\qquad = -\displaystyle\sum_{\gamma' \in \mathbb{N}^{m'}} \underline{\mathscr{L}}^{\beta}(\bar{f}^{\gamma'})(z, 0, 0, 0)\, [\nabla_{t'}\, \Theta'_{j',\gamma'}(h(z, 0))]. \end{cases} \tag{4.3.46}$$

Notice that we write here the first arguments of $R'_{j',\beta}$ and the arguments of the differentiated expression $\underline{\mathscr{L}}^{\beta}(\bar{f}^{\gamma'})$ as (z, w, ζ, ξ), and not as (t, τ). Here, in the arguments $(z, 0, 0, 0)$ of this expression $\underline{\mathscr{L}}^{\beta}(\bar{f}^{\gamma'})$, the term z comes from the coefficients of the vector fields $\underline{\mathscr{L}}_k$, but $(\zeta, \xi) = (0, 0)$. It follows that the sum in (4.3.46) is in fact truncated with $|\gamma'| \leq |\beta|$, since $\bar{f}^{\gamma'}$ vanishes to order $|\gamma'|$ at the origin. Thus, the columns of the matrix $(\nabla_{t'} R'_{j',\beta})_{\beta \in \mathbb{N}^m}$ on the left hand side of (4.3.46) are obtained as a linear combination (with coefficients being certain formal power series in z) of the columns of the matrix $(\nabla_{t'} \Theta'_{j',\gamma'})_{\gamma' \in \mathbb{N}^{m'}}$ on the right hand side. Thanks to Lemma 4.3.43 (to be proved below), we deduce that the formal linear

space spanned by the columns of the matrix $(\nabla_{t'} R'_{j',\beta})_{\beta\in\mathbb{N}^m}$ on the left coincides with the formal linear space spanned by the columns of matrix $(\nabla_{t'}\Theta'_{j',\gamma'})_{\gamma'\in\mathbb{N}^{m'}}$ on the right. Finally, thanks to the Segre nondegeneracy assumption (4.3.42), we deduce

(4.3.47)
$$\mathrm{genMrk}\,\big(\nabla_{t'} R'_{j',\beta}(z,0,0,0,J^{|\beta|}\bar{h}(0):\,h(z,0))\big)_{1\le j'\le d',\,\beta\in\mathbb{N}^m}=n',$$

which shows that h is ℓ_1-Segre nondegenerate, for some $\ell_1\ge\ell'_0$. It remains to establish the technical Lemma 4.3.43.

Proof. So we fix j'. Again, we proceed by contradiction. Assume that the generic rank κ' of the $n'\times\infty$ matrix

$$\big(\nabla_{t'}\,R'_{j',\beta}(z,0,0,0,J^{|\beta|}\bar{h}(0):\,h(z,0))\big)_{\beta\in\mathbb{N}^m} \tag{4.3.48}$$

is strictly smaller than $n'_{j'}$, namely $\kappa'\le n'_{j'}-1$. We choose κ' distinct multiindices $\beta_1,\dots,\beta_{\kappa'}\in\mathbb{N}^m$ such that the generic rank of the $n'\times\kappa'$ extracted matrix

$$\Big(\nabla_{t'}\,R'_{j',\beta_{i'}}(z,0,0,0,J^{|\beta|}\bar{h}(0):\,h(z,0))\Big)_{1\le i'\le\kappa'} \tag{4.3.49}$$

is equal to κ'. We let $\Lambda(z)\in\mathbb{C}[\![z]\!]$ denote a not identically zero $\kappa'\times\kappa'$ minor of this matrix. It then follows from Cramer's rule and from the rank assumption that for every multiindex $\beta\in\mathbb{N}^m$ different from $\beta_1,\dots,\beta_{\kappa'}$, there exist formal power series $\Lambda^1_\beta(z),\dots,\Lambda^{\kappa'}_\beta(z)\in\mathbb{C}[\![z]\!]$ such that we can write

(4.3.50)
$$\begin{cases}\Lambda(z)\,\nabla_{t'}\,R'_{j',\beta}\,(z,0,0,0,J^{|\beta|}\bar{h}(0):\,h(z,0))\equiv\\ \qquad\equiv\Lambda^1_\beta(z)\,\nabla_{t'}\,R'_{j',\beta_1}(z,0,0,0,J^{|\beta|}\bar{h}(0):\,h(z,0))+\cdots+\\ \qquad\quad+\Lambda^{\kappa'}_\beta(z)\,\nabla_{t'}\,R'_{j',\beta_{\kappa'}}(z,0,0,0,J^{|\beta|}\bar{h}(0):\,h(z,0)).\end{cases}$$

Replacing the $R'_{j',\beta}$ by their values given by (4.3.46), we get

(4.3.51)
$$\begin{cases}\Lambda(z)\displaystyle\sum_{\gamma'\in\mathbb{N}^{m'}}\underline{\mathscr{L}}^{\beta}(\bar{f}^{\gamma'})(z,0,0,0)\,[\nabla_{t'}\,\Theta'_{j',\gamma'}(h(z,0))]\equiv\\ \qquad\equiv\displaystyle\sum_{\gamma'\in\mathbb{N}^{m'}}\Big(\Lambda^1_\beta(z)\,\underline{\mathscr{L}}^{\beta_1}(\bar{f}^{\gamma'})(z,0,0,0)+\cdots+\\ \qquad\quad+\Lambda^{\kappa'}_\beta(z)\,\underline{\mathscr{L}}^{\beta_{\kappa'}}(\bar{f}^{\gamma'})(z,0,0,0)\Big)\,\big[\nabla_{t'}\,\Theta'_{j',\gamma'}(h(z,0))\big]\,.\end{cases}$$

We remind that in normal coordinates, we have $g(z,0)\equiv 0$, hence

$$h(z,0)\equiv(f(z,0),0). \tag{4.3.52}$$

Before going further, we need the following elementary observation.

Lemma 4.3.53. *Assume that h is CR-transversal at p_0 and fix j' as in Lemma 4.3.43. Then*

$$\mathrm{genMrk}\,\big(\nabla_{t'}\,\Theta'_{j',\gamma'}(f(z,0),0)\big)_{\gamma'\in\mathbb{N}^{m'}}=n'_{j'}. \tag{4.3.54}$$

Proof. Suppose on the contrary that this generic matrix rank is equal to an integer $\kappa' \leq n'_{j'} - 1$. By the definition (4.3.45) of $n'_{j'}$, there exists a $n'_{j'} \times n'_{j'}$ minor $d'(z')$ of the $n' \times \infty$ matrix $(\nabla_{t'} \Theta'_{j',\gamma'}(z',0))_{\gamma' \in \mathbb{N}^{m'}}$ which does not vanish identically as a power series of z'. We deduce that $d'(f(z,0)) \equiv 0$, contradicting the CR-transversality assumption on h, which completes the proof. $\square$

After making a linear combination, we can rewrite temporarily the relations (4.3.51) under the form

$$\sum_{\gamma' \in \mathbb{N}^{m'}} \overline{F}_{\beta,\gamma'}(z) \, \left[\nabla_{t'} \Theta'_{j',\gamma'}(h(z,0))\right] \equiv 0. \tag{4.3.55}$$

By Lemma 4.3.53, there exist multiindices $\gamma'_1, \ldots, \gamma'_{n'_{j'}}$ such that a $n'_{j'} \times n'_{j'}$ minor $A(z)$ of the $n' \times n'_{j'}$ matrix

$$\Big(\nabla_{t'} \Theta'_{j',\gamma'_{i'}}(h(z,0))\Big)_{1 \leq i' \leq n'_{j'}} \tag{4.3.56}$$

does not vanish identically as a power series of z. We deduce that after making some linear combinations between the lines of the system (4.3.55) that for every $i' = 1, \ldots, n'_{j'}$, there exist formal power series $A'_{i',\gamma'}(z)$ such that we can solve

$$A(z) \, \overline{F}_{\beta,\gamma'_{i'}}(z) \equiv \sum_{\gamma' \neq \gamma'_1, \ldots, \gamma'_{n'_{j'}}} A'_{i',\gamma'}(z) \, \overline{F}_{\beta,\gamma'}(z). \tag{4.3.57}$$

We now replace the $\overline{F}_{\beta,\gamma'}$ by their values given by (4.3.51) and (4.3.55). We obtain the following formal equalities, valuable for $i' = 1, \ldots, n'_{j'}$ and for $\beta \neq \beta_1, \ldots, \beta_{\kappa'}$:

(4.3.58)

$$\begin{cases} A(z) \, \Lambda(z) \, \underline{\mathscr{L}}^{\beta}(\bar{f}^{\gamma'_{i'}})(z,0,0,0) - A(z) \, \Lambda^1_{\beta}(z) \, \underline{\mathscr{L}}^{\beta_1}(\bar{f}^{\gamma'_{i'}})(z,0,0,0) - \cdots - \\ \qquad - A(z) \, \Lambda^{\kappa'}_{\beta}(z) \, \underline{\mathscr{L}}^{\beta_{\kappa'}}(\bar{f}^{\gamma'_{i'}})(z,0,0,0) \equiv \\ \qquad \equiv \displaystyle\sum_{\gamma' \neq \gamma'_1, \ldots, \gamma'_{n'_{j'}}} \Big(A'_{i',\gamma'}(z) \, \Lambda(z) \, \underline{\mathscr{L}}^{\beta}(\bar{f}^{\gamma'})(z,0,0,0) - \\ \qquad - A'_{i',\gamma'}(z) \, \Lambda^1_{\beta}(z) \, \underline{\mathscr{L}}^{\beta_1}(\bar{f}^{\gamma'})(z,0,0,0) - \cdots - \\ \qquad - A'_{i',\gamma'}(z) \, \Lambda^1_{\beta}(z) \, \underline{\mathscr{L}}^{\beta_{\kappa'}}(\bar{f}^{\gamma'})(z,0,0,0) \Big). \end{cases}$$

After making some linear combinations, we can rewrite this identity as

(4.3.59)
$$\begin{cases} A(z)\,\Lambda(z)\;\underline{\mathscr{L}}^{\beta}(\bar{f}^{\gamma'_{i'}})(z,0,0,0) - \displaystyle\sum_{\gamma'\neq\gamma'_1,\dots,\gamma'_{n'_{j'}}} A'_{i',\gamma'}(z)\,\Lambda(z)\,\underline{\mathscr{L}}^{\beta}(\bar{f}^{\gamma'})(z,0,0,0) \equiv \\ \qquad \equiv \Lambda^1_\beta(z)\,\Big(A(z)\,\underline{\mathscr{L}}^{\beta_1}(\bar{f}^{\gamma'_{i'}})(z,0,0,0) - \\ \qquad\qquad - \displaystyle\sum_{\gamma'\neq\gamma'_1,\dots,\gamma'_{n'_{j'}}} A'_{i',\gamma'}(z)\,\underline{\mathscr{L}}^{\beta_1}(\bar{f}^{\gamma'})(z,0,0,0)\Big) + \cdots + \\ \qquad + \Lambda^{\kappa'}_\beta(z)\,\Big(A(z)\,\underline{\mathscr{L}}^{\beta_{\kappa'}}(\bar{f}^{\gamma'_{i'}})(z,0,0,0) - \\ \qquad\qquad - \displaystyle\sum_{\gamma'\neq\gamma'_1,\dots,\gamma'_{n'_{j'}}} A'_{i',\gamma'}(z)\,\underline{\mathscr{L}}^{\beta_{\kappa'}}(\bar{f}^{\gamma'})(z,0,0,0)\Big). \end{cases}$$

Next, we introduce the following new notation

$$\bar{f}_{\gamma',\beta}(z) := \underline{\mathscr{L}}^{\beta}(\bar{f}^{\gamma'})(z,0,0,0). \tag{4.3.60}$$

Of course, we have

$$\bar{f}^{\gamma'}(\zeta,0) \equiv \sum_{\beta\in\mathbb{N}^m} \bar{f}_{\gamma',\beta}(0)\,\frac{\zeta^\beta}{\beta!} \tag{4.3.61}$$

and

$$\begin{cases} \bar{f}^{\gamma'}(\zeta,\Theta(\zeta,z,0)) \equiv \displaystyle\sum_{\beta\in\mathbb{N}^m} \frac{\zeta^\beta}{\beta!}\,\left[\frac{\partial^{|\beta|}}{\partial\zeta^\beta}\Big(\bar{f}^{\gamma'}(\zeta,\Theta(\zeta,z,0))\Big)\right]_{\zeta=0} \\ \qquad\qquad \equiv \underline{\mathscr{L}}^{\beta}(\bar{f}^{\gamma'})(z,0,0,0) \\ \qquad\qquad \equiv \displaystyle\sum_{\beta\in\mathbb{N}^m} \frac{\zeta^\beta}{\beta!}\,\bar{f}_{\gamma',\beta}(z). \end{cases} \tag{4.3.62}$$

With this notation, we can rewrite (4.3.59) as follows, where $i' = 1, \dots, n'_{j'}$ and $\beta \neq \beta_1, \dots, \beta_{\kappa'}$:
(4.3.63)

$$\left\{ \begin{aligned} & A(z)\,\Lambda(z)\;\bar{f}_{\gamma'_{i'}}(z) - \sum_{\gamma' \neq \gamma'_1, \dots, \gamma'_{n'_{j'}}} \Lambda(z)\, A'_{i',\gamma'}(z)\, \bar{f}_{\gamma',\beta}(z) \equiv \\ & \qquad \equiv \Lambda^1_\beta(z) \left(A(z)\, \bar{f}_{\gamma'_{i'},\beta}(z) - \sum_{\gamma' \neq \gamma'_1, \dots, \gamma'_{n'_{j'}}} A'_{i',\gamma'}(z)\, \bar{f}_{\gamma',\beta}(z) \right) + \cdots + \\ & \qquad + \Lambda^1_\beta(z) \left(A(z)\, \bar{f}_{\gamma'_{i'},\beta}(z) - \sum_{\gamma' \neq \gamma'_1, \dots, \gamma'_{n'_{j'}}} A'_{i',\gamma'}(z)\, \bar{f}_{\gamma',\beta}(z) \right). \end{aligned} \right.$$

On the other hand, taking the definition (4.3.60) of $\bar{f}_{\gamma',\beta}(z)$ and (4.3.62) into account, we have the power series development
(4.3.64)

$$\left\{ \begin{aligned} & \sum_{\beta \in \mathbb{N}^m} \frac{\zeta^\beta}{\beta!} \left(A(z)\,\Lambda(z)\, \bar{f}_{\gamma'_{i'},\beta}(z) - \sum_{\gamma' \neq \gamma'_1, \dots, \gamma'_{n'_{j'}}} \Lambda(z)\, A'_{i',\gamma'}(z)\, \bar{f}^{\gamma',\beta}(z) \right) \equiv \\ & \qquad \equiv A(z)\,\Lambda(z)\, \bar{f}^{\gamma'_{i'}}(\zeta, \Theta(\zeta, z, 0)) - \sum_{\gamma' \neq \gamma'_1, \dots, \gamma'_{n'_{j'}}} \Lambda(z)\, A'_{i',\gamma'}(z)\, \bar{f}^{\gamma'}(\zeta, \Theta(\zeta, z, 0)). \end{aligned} \right.$$

In this identity, we decompose the sum $\sum_{\beta \in \mathbb{N}^m}$ as the sum $\sum_{\beta \neq \beta_1, \dots, \beta_{\kappa'}}$ plus the κ' remaining terms corresponding to $\beta = \beta_1, \dots, \beta_{\kappa'}$ and we substitute

the expressions obtained just previously in (4.3.63), which yields
(4.3.65)

$$\left\{\begin{aligned}
&\sum_{\beta\in\mathbb{N}^m}\frac{\zeta^\beta}{\beta!}\left(A(z)\,\Lambda(z)\,\bar{f}_{\gamma'_{i'},\beta}(z)-\sum_{\gamma'\neq\gamma'_1,\ldots,\gamma'_{n'_{j'}}}\Lambda(z)\,A'_{i',\gamma'}(z)\,\bar{f}_{\gamma',\beta}(z)\right)\equiv\\
&\equiv\sum_{\beta\neq\beta_1,\ldots,\beta_{\kappa'}}\frac{\zeta^\beta}{\beta!}\left(A(z)\,\Lambda(z)\,\bar{f}_{\gamma'_{i'},\beta}(z)-\sum_{\gamma'\neq\gamma'_1,\ldots,\gamma'_{n'_{j'}}}\Lambda(z)\,A'_{i',\gamma'}(z)\,\bar{f}_{\gamma',\beta}(z)\right)+\\
&\qquad+\frac{\zeta^{\beta_1}}{\beta_1!}\left(A(z)\,\Lambda(z)\,\bar{f}_{\gamma'_{i'},\beta_1}(z)-\sum_{\gamma'\neq\gamma'_1,\ldots,\gamma'_{n'_{j'}}}\Lambda(z)\,A'_{i',\gamma'}(z)\,\bar{f}_{\gamma',\beta_1}(z)\right)+\\
&\qquad+\cdots+\\
&\qquad+\frac{\zeta^{\beta_{\kappa'}}}{\beta_{\kappa'}!}\left(A(z)\,\Lambda(z)\,\bar{f}_{\gamma'_{i'},\beta_{\kappa'}}(z)-\sum_{\gamma'\neq\gamma'_1,\ldots,\gamma'_{n'_{j'}}}\Lambda(z)\,A'_{i',\gamma'}(z)\,\bar{f}_{\gamma',\beta_{\kappa'}}(z)\right).
\end{aligned}\right.$$

Now, we make some linear combinations, which yields the following representation of the right hand side of (4.3.65)

(4.3.66)

$$
\begin{cases}
A(z)\,\Lambda(z)\;\bar{f}^{\gamma'_{i'}}(\zeta,\Theta(\zeta,z,0)) - \displaystyle\sum_{\gamma'\neq\gamma'_1,\dots,\gamma'_{n'_{j'}}} \Lambda(z)\,A'_{i',\gamma'}(z)\,\bar{f}^{\gamma'}(\zeta,\Theta(\zeta,z,0)) \equiv \\
\equiv \displaystyle\sum_{\beta\neq\beta_1,\dots,\beta_{\kappa'}} \frac{\zeta^{\beta}}{\beta!}\Bigg[\Lambda^1_{\beta}(z)\left(A(z)\,\bar{f}_{\gamma'_{i'},\beta_1}(z) - \sum_{\gamma'\neq\gamma'_1,\dots,\gamma'_{n'_{j'}}} A'_{i',\gamma'}(z)\,\bar{f}_{\gamma',\beta_1}(z)\right) + \\
\qquad + \cdots + \\
\qquad + \Lambda^{\kappa'}_{\beta}(z)\left(A(z)\,\bar{f}_{\gamma'_{i'},\beta_{\kappa'}}(z) - \displaystyle\sum_{\gamma'\neq\gamma'_1,\dots,\gamma'_{n'_{j'}}} A'_{i',\gamma'}(z)\,\bar{f}_{\gamma',\beta_{\kappa'}}(z)\right)\Bigg] + \\
\qquad + \dfrac{\zeta^{\beta_1}}{\beta_1!}\left[A(z)\,\bar{f}_{\gamma'_{i'},\beta_1}(z) - \displaystyle\sum_{\gamma'\neq\gamma'_1,\dots,\gamma'_{n'_{j'}}} A'_{i',\gamma'}(z)\,\bar{f}_{\gamma',\beta_1}(z)\right] + \\
\qquad + \cdots + \\
\qquad + \dfrac{\zeta^{\beta_{\kappa'}}}{\beta_{\kappa'}!}\left[A(z)\,\bar{f}_{\gamma'_{i'},\beta_{\kappa'}}(z) - \displaystyle\sum_{\gamma'\neq\gamma'_1,\dots,\gamma'_{n'_{j'}}} A'_{i',\gamma'}(z)\,\bar{f}_{\gamma',\beta_{\kappa'}}(z)\right].
\end{cases}
$$

If we now set for $i' = 1,\dots,n'_{j'}$:

(4.3.67)
$$
\begin{cases}
\Pi_{i',1}(z) := A(z)\,\bar{f}_{\gamma'_{i'},\beta_1}(z) - \displaystyle\sum_{\gamma'\neq\gamma'_1,\dots,\gamma'_{n'_{j'}}} A'_{i',\gamma'}(z)\,\bar{f}_{\gamma',\beta_1}(z), \\
\qquad\qquad \cdots\cdots\cdots \\
\Pi_{i',\kappa'}(z) := A(z)\,\bar{f}_{\gamma'_{i'},\beta_{\kappa'}}(z) - \displaystyle\sum_{\gamma'\neq\gamma'_1,\dots,\gamma'_{n'_{j'}}} A'_{i',\gamma'}(z)\,\bar{f}_{\gamma',\beta_{\kappa'}}(z),
\end{cases}
$$

then we can rewrite (4.3.66) as follows
(4.3.68)

$$\begin{cases} A(z)\,\Lambda(z)\;\bar{f}^{\gamma'_{i'}}(\zeta,\Theta(\zeta,z,0)) - \displaystyle\sum_{\gamma'\neq\gamma'_1,\dots,\gamma'_{n'_{j'}}} \Lambda(z)\,A'_{i',\gamma'}(z)\,\bar{f}^{\gamma'}(\zeta,\Theta(\zeta,z,0)) \equiv \\ \qquad \equiv \Pi_{i',1}(z)\left(\dfrac{\zeta^{\beta_1}}{\beta_1!}\,\Lambda(z) + \displaystyle\sum_{\beta\neq\beta_1,\dots,\beta_{\kappa'}} \Lambda^1_\beta(z)\,\dfrac{\zeta^\beta}{\beta!}\right) + \\ \qquad\quad + \cdots + \\ \qquad\quad + \Pi_{i',\kappa'}(z)\left(\dfrac{\zeta^{\beta_{\kappa'}}}{\beta_{\kappa'}!}\,\Lambda(z) + \displaystyle\sum_{\beta\neq\beta_1,\dots,\beta_{\kappa'}} \Lambda^{\kappa'}_\beta(z)\,\dfrac{\zeta^\beta}{\beta!}\right) =: \\ \qquad =: \Pi_{i',1}(z)\,G_1(z,\zeta) + \cdots + \Pi_{i',\kappa'}(z)\,G_{\kappa'}(z,\zeta). \end{cases}$$

We now set $C(z) := A(z)\,\Lambda(z)$ and for $i' = 1,\dots,n'_{j'}$ and $\gamma' \neq \gamma'_1,\dots,\gamma'_{n'_{j'}}$,

(4.3.69)
$$B_{i',\gamma'} := \Lambda(z)\,A'_{i',\gamma'}(z).$$

In summary, we have obtained that for $i' = 1,\dots,n'_{j'}$, we can write
(4.3.70)

$$\begin{cases} C(z)\,\bar{f}^{\gamma'_{i'}}(\zeta,\Theta(\zeta,z,0)) - \displaystyle\sum_{\gamma'\neq\gamma'_1,\dots,\gamma'_{n'_{j'}}} B_{i',\gamma'}(z)\,\bar{f}^{\gamma'}(\zeta,\Theta(\zeta,z,0)) \equiv \\ \qquad\qquad \equiv \Pi_{i',1}(z)\,G_1(z,\zeta) + \cdots + \Pi_{i',\kappa'}(z)\,G_{\kappa'}(z,\zeta). \end{cases}$$

Because $\kappa' \leq n'_{j'} - 1$, hence there are less than $n'_{j'}$ functions $G_{i'}(z,\zeta)$ in the right hand side of (4.3.70), it follows that there exist power series $\mu_1(z),\dots,\mu_{n'_{j'}}(z) \in \mathbb{C}[\![z]\!]$, not all zero, such that
(4.3.71)

$$\begin{cases} 0 \equiv \mu_1(z)\left(C(z)\,\bar{f}^{\gamma'_1}(\zeta,\Theta(\zeta,z,0)) - \displaystyle\sum_{\gamma'\neq\gamma'_1,\dots,\gamma'_{n'_{j'}}} B_{1,\gamma'}(z)\,\bar{f}^{\gamma'}(\zeta,\Theta(\zeta,z,0))\right) + \\ \qquad + \cdots + \\ \qquad + \mu_{n'_{j'}}(z)\left(C(z)\,\bar{f}^{\gamma'_{n'_{j'}}}(\zeta,\Theta(\zeta,z,0)) - \displaystyle\sum_{\gamma'\neq\gamma'_1,\dots,\gamma'_{n'_{j'}}} B_{n'_{j'},\gamma'}(z)\,\bar{f}^{\gamma'}(\zeta,\Theta(\zeta,z,0))\right). \end{cases}$$

Finally, we simplify a little bit this expression by writing it under the form
(4.3.72)

$$\begin{cases} 0 \equiv \mu_1(z)\, C(z)\, \bar{f}^{\gamma'_1}(\zeta, \Theta(\zeta, z, 0)) + \cdots + \mu_{n'_{j'}}(z)\, C(z)\, \bar{f}^{\gamma'_{n'_{j'}}}(\zeta, \Theta(\zeta, z, 0)) + \\ \qquad + \displaystyle\sum_{\gamma' \neq \gamma'_1, \ldots, \gamma'_{n'_{j'}}} E_{\gamma'}(z)\, \bar{f}^{\gamma'}(\zeta, \Theta(\zeta, z, 0)). \end{cases}$$

where the $E_{\gamma'}(z)$ are formal power series with respect to z. We are now in position to conclude the proof of Lemma 4.3.53, namely to come to an absurd as announced in the beginning of the proof.

Indeed, since $C(z) \not\equiv 0$ by construction, and since there exists at smallest one power series $\mu_{i'}(z)$ which does not vanish identically, we can apply the following elementary lemma to conclude that $\bar{f}(\zeta, 0)$ satisfies a non-trivial power series identity, which clearly contradicts the CR-transversality assumption.

Lemma 4.3.73. *Assume that there exists a collection of power series $E_{\gamma'}(z)$ indexed by $\gamma' \in \mathbb{N}^{m'}$ with the property that there exists at smallest one multiindex $\gamma'_0 \in \mathbb{N}^{m'}$ with $E_{\gamma'_0}(z) \not\equiv 0$ in $\mathbb{C}[\![z]\!]$ and assume that $\bar{f}(\zeta, \Theta(\zeta, z, 0))$ satisfies the formal power series identity*

$$\sum_{\gamma' \in \mathbb{N}^{m'}} E_{\gamma'}(z)\, \bar{f}^{\gamma'}(\zeta, \Theta(\zeta, z, 0)) \equiv 0 \tag{4.3.74}$$

in $\mathbb{C}[\![z, \zeta]\!]$. Then there exists a collection of constants $F_{\gamma'} \in \mathbb{C}$ indexed by $\gamma' \in \mathbb{N}^{m'}$ which do not all vanish *such that*

$$\sum_{\gamma' \in \mathbb{N}^{m'}} F_{\gamma'}\, \bar{f}^{\gamma'}(\zeta, 0) \equiv 0 \tag{4.3.75}$$

in $\mathbb{C}[\![\zeta]\!]$. In other words, the formal mapping $\zeta \mapsto \bar{f}(\zeta, 0)$ is not *transversal, in the sense of Definition 4.1.2* **(5)**.

Proof. We put $z = 0$ in (4.3.74). If there exists a multiindex $\gamma' \in \mathbb{N}^{m'}$ such that $E_{\gamma'}(0) \neq 0$, we are done. Otherwise, we differentiate (4.3.74) with respect to z and we put $z = 0$. If there exist an integer k with $1 \leq k \leq m$ and a multiindex $\gamma' \in \mathbb{N}^{m'}$ such that $[\partial E_{\gamma'}(0)/\partial z_k](0) \neq 0$, we are done. Otherwise, we again differentiate with respect to z and put $z = 0$. Since $E_{\gamma'_0}(z) \not\equiv 0$ in $\mathbb{C}[\![z]\!]$, this process converges towards the conclusion after a finite number of steps, which completes the proof. $\square$

The proofs of Lemma 4.3.53 and of part **(4)** of Theorem 4.3.1 are now complete. $\square$

We now prove part **(5)** of Theorem 4.3.1. Proceeding as for parts **(2)** and **(4)**, we shall essentially reason by contradiction, but we shall summarize the main part of the proof (Lemma 4.3.79 below), because it is very similar to the proof of Lemma 4.3.53.

By assumption of ℓ_0'-holomorphic nondegeneracy of M' at p_0', we have

$$\mathrm{genMrk}\left(\nabla_{t'}\,\Theta'_{j',\gamma'}(t')\right)_{1\leq j'\leq d',\,\gamma'\in\mathbb{N}^{m'}}=n'. \tag{4.3.76}$$

Notice that in **(5)**, we make one supplementary assumption, by requiring in addition that h is transversal at p_0. This to insure that the following holds.

Lemma 4.3.77. *Assume that h is transversal at p_0 and that M' is holomorphically nondegenerate at p_0. Then*

$$\mathrm{genMrk}\left(\nabla_{t'}\,\Theta'_{j',\gamma'}(h(t))\right)_{1\leq j'\leq d',\,\gamma'\in\mathbb{N}^{m'}}=n'. \tag{4.3.78}$$

Proof. Suppose on the contrary that this generic matrix rank if equal to an integer $\kappa'\leq n'-1$. By hypothesis, there exists a $n'\times n'$ minor $d'(t')$ of the $n'\times\infty$ matrix (4.3.76) which does not vanish identically as a power series of t'. We deduce $d'(h(t))\equiv 0$, contradicting the transversality of h at p_0, which completes the proof. □

To establish part **(5)** of Theorem 4.3.1, we need the following technical lemma.

Lemma 4.3.79. *Fix j' with $1\leq j'\leq d'$. Let $n'_{j'}$ be the integer defined by*

$$n'_{j'}:=\mathrm{genMrk}\left(\nabla_{t'}\,\Theta'_{j',\gamma'}(t')\right)_{\gamma'\in\mathbb{N}^{m'}}. \tag{4.3.80}$$

Assume that h is CR-transversal at p_0. Then we also have

$$\mathrm{genMrk}\left(\nabla_{t'}\,R_{j',\beta}(0,0,0,0,J^{|\beta|}\bar{h}(0):\,h(t))\right)_{\beta\in\mathbb{N}^m}=n'_{j'}. \tag{4.3.81}$$

As in the paragraph after the statement of Lemma 4.3.53, we can easily verify that this technical lemma implies part **(5)** of Theorem 4.3.1. It remains to prove Lemma 4.3.79.

Proof. So we fix j'. Again, we proceed by contradiction. We summarize the proof. Assuming that the generic rank of the $n'\times\infty$ matrix

$$\left(\nabla_{t'}\,R'_{j',\beta}(0,0,0,0,J^{|\beta|}\bar{h}(0):\,h(t))_{\beta\in\mathbb{N}^m}\right) \tag{4.3.82}$$

is equal to an integer $\kappa'\leq n'_{j'}-1$ and taking into account that

$$\mathrm{genMrk}\,\left(\Theta'_{j',\gamma'}(h(t))\right)_{\gamma'\in\mathbb{N}^{m'}}=n'_{j'} \tag{4.3.83}$$

(by a slight generalization of Lemma 4.3.77) since h is transversal at p_0, we deduce that there exist κ' distinct multiindices $\beta_1,\ldots,\beta_{\kappa'}\in\mathbb{N}^m$ and a not identically zero power series $\Lambda(t)\not\equiv 0$ and for every multiindex $\beta\neq\beta_1,\ldots,\beta_{\kappa'}$, power series $\Lambda^1_\beta(t),\ldots,\Lambda^{\kappa'}_\beta(t)$ such that we can write

$$\begin{cases} 0\equiv\displaystyle\sum_{\gamma'\in\mathbb{N}^{m'}}\Big(\Lambda(t)\,\underline{\mathscr{L}}^{\beta}(\bar{f}^{\gamma'})(0)\,-\Lambda^1_\beta(t)\,\underline{\mathscr{L}}^{\beta_1}(\bar{f}^{\gamma'})(0)\,-\cdots- \\ \qquad\qquad -\Lambda^{\kappa'}_\beta(t)\,\underline{\mathscr{L}}^{\beta_{\kappa'}}(\bar{f}^{\gamma'})(0)\Big)\,\left[\nabla_{t'}\,\Theta'_{j',\gamma'}(h(t))\right]. \end{cases} \tag{4.3.84}$$

Reasoning as in the proof of Lemma 4.3.53, we deduce that there exist $n'_{j'}$ distinct multiindices $\gamma'_1, \dots, \gamma'_{j'} \in \mathbb{N}^{m'}$, that there exists a not identically zero power series $A(t) \not\equiv 0$, that for $i' = 1, \dots, n'_{j'}$ and for $\gamma' \neq \gamma'_1, \dots, \gamma'_{n'_{j'}}$, there exist power series $A'_{i',\gamma'}(t) \in \mathbb{C}[\![t]\!]$, that there exist power series $\Pi_{i',1}(t), \dots, \Pi_{i',\kappa'}(t) \in \mathbb{C}[\![t]\!]$ and that there exist power series $G_1(t,\zeta), \dots, G_{\kappa'}(t,\zeta) \in \mathbb{C}[\![t,\zeta]\!]$ such that we can write for $i' = 1, \dots, n'_{j'}$:

$$\text{(4.3.85)} \quad \begin{cases} A(t)\,\Lambda(t)\;\bar{f}^{\gamma'_{i'}}(\zeta,0) - \displaystyle\sum_{\gamma' \neq \gamma'_1, \dots, \gamma'_{n'_{j'}}} \Lambda(t)\,A'_{i',\gamma'}(t)\,\bar{f}^{\gamma'}(\zeta,0) \equiv \\ \qquad\qquad \equiv \Pi_{i',1}(t)\,G_1(t,\zeta) + \cdots + \Pi_{i',\kappa'}(t)\,G_{\kappa'}(t,\zeta). \end{cases}$$

Since $\kappa' \leq n'_{j'} - 1$, we deduce that there exist power series $\mu_1(t), \dots, \mu_{n'_{j'}}(t) \in \mathbb{C}[\![t]\!]$ not all zero such that we can write, after setting $C(t) := A(t)\,\Lambda(t)$ and $B_{i',\gamma'}(t) := \Lambda(t)\,A'_{i',\gamma'}(t)$:

(4.3.86)

$$\begin{cases} 0 \equiv \mu_1(t) \left(C(t)\,\bar{f}^{\gamma'_1}(\zeta,0) - \displaystyle\sum_{\gamma' \neq \gamma'_1, \dots, \gamma'_{n'_{j'}}} B_{1,\gamma'}(t)\,\bar{f}^{\gamma'}(\zeta,0) \right) + \\ \qquad + \cdots + \\ \qquad + \mu_{n'_{j'}}(t) \left(C(t)\,\bar{f}^{\gamma'_{n'_{j'}}}(\zeta,0) - \displaystyle\sum_{\gamma' \neq \gamma'_1, \dots, \gamma'_{n'_{j'}}} B_{n'_{j'},\gamma'}(t)\,\bar{f}^{\gamma'}(\zeta,0) \right). \end{cases}$$

Simplifying a little bit this expression by writing it under the form

$$\text{(4.3.87)} \quad \begin{cases} 0 \equiv \mu_1(t)\,C(t)\,\bar{f}^{\gamma'_1}(\zeta,0) + \cdots + \mu_{n'_{j'}}(t)\,C(t)\,\bar{f}^{\gamma'_{n'_{j'}}}(\zeta,0) + \\ \qquad + \displaystyle\sum_{\gamma' \neq \gamma'_1, \dots, \gamma'_{n'_{j'}}} E_{\gamma'}(t)\,\bar{f}^{\gamma'}(\zeta,0), \end{cases}$$

we deduce by applying the same reasoning as in Lemma 4.3.73 that there exists a not identically zero power series relation

$$\text{(4.3.88)} \qquad \sum_{\gamma' \in \mathbb{N}^{m'}} F_{\gamma'}\,\bar{f}^{\gamma'}(\zeta,0) \equiv 0,$$

contradicting the assumption of CR-transversality, which completes the proof of Lemma 4.3.79. □

This completes the proof of part **(5)**. In conclusion, the proof of Theorem 4.3.1 is complete. □

Bibliography for Part I

REFERENCES

[1] BAOUENDI, M.S.; EBENFELT, P.; ROTHSCHILD, L.P.: *Real submanifolds in complex space and their mappings*. Princeton Mathematical Series, **47**, Princeton University Press Princeton, NJ, 1999, xii+404 pp.

[2] BELLAÏCHE, A.: *SubRiemannian Geometry*, Progress in Mathematics **144**, Birkhäuser Verlag, Basel/Switzerland, 1996, 1–78.

[3] CARTAN, É.: *Sur la géométrie pseudo-conforme des hypersurfaces de l'espace de deux variables complexes, I*, Annali di Mat. **11** (1932), 17–90; or Oeuvres II, 1231–1304.

[4] CARTAN, É.: *Sur la géométrie pseudo-conforme des hypersurfaces de l'espace de deux variables complexes, II*, Ann. Scuola Norm. Sup. Pisa **1** (1932), 333–354; or Oeuvres III, 1217–1238.

[5] CHERN, S.S.; MOSER, J.K.: *Real hypersurfaces in complex manifolds*, Acta Math. **133** (1974), no. 2, 219–271.

[6] CHIRKA, E.M.: *Complex analytic sets*, Mathematics and its applications (Soviet Series), **46**, Kluwer Academic Publishers Group, Dordrecht, 1989, xx+372 pp.

[7] CHIRKA, E.M.: *An introduction to the geometry of CR manifolds* (Russian), Uspekhi Mat. Nauk **46** (1991), no. 1(277), 81–164, 240; translation in Russian Math. Surveys **46** (1991), no. 1, 95–197.

[8] DIEDERICH, K.; FORNÆSS, J.E.: *Proper holomorphic mappings between real-analytic pseudoconvex domains in $\mathbb{C}^n$*, Math. Ann **282** (1988), no. 4, 681–700.

[9] DIEDERICH, K.; WEBSTER, S.M.: *A reflection principle for degenerate real hypersurfaces*, Duke Math. J. **47** (1980), no. 4, 835–843.

[10] FEFFERMAN, C.: *The Bergman kernel and biholomorphic mappings of pseudoconvex domains*, Invent. Math. **26** (1974), 1–65.

[11] FREEMAN, M.: *Real submanifolds with degenerate Levi form*, Several complex variables (Proc. Sympos. Pure Math., Vol. **XXX**, Williams Coll., Williamstown, Mass., 1975), Part 1, pp. 141–147. Amer. Math. Soc., Providence, R.I., 1977.

[12] HAN, C.K.: *Analyticity of CR equivalences between some real analytic hypersurfaces in $\mathbb{C}^n$ with degenerate Levi-forms*, Invent. Math **73** (1983), no. 1, 51–69.

[13] HARTOGS, F.: *Zur Theorie der analytischen Funktionen mehrerer unabhängiger Veränderlichen, insbesondere über die Darstellung derselben durch Reihen, welche nach Potenzen einer Veränderlichen fortschreiten*, Math. Ann. **62** (1906), 1–88.

[14] HENKIN, G.M.; TUMANOV, A.E.: *Local characterization of holomorphic automorphisms of Siegel domains* (Russian), Funktsional. Anal. i Prilozhen. **17** (1983), no. 4, 49–61.

[15] KRUZHILIN, N.G.: *Description of the local automorphism groups of real hypersurfaces*, Proceedings of the International Congress of Mathematicians, Vol. 1, 2 (Berkeley, Calif., 1986), 749–758, Amer. Math. Soc., Providence, RI, 1987.

[16] LEVI, E.E.: *Studii sui punti singolari essenziali delle funzioni analitiche di due o più variabili complesse*, Annali di Mat. **17** (1910), 61–87.

[17] LEWY, H.: *On the boundary behaviour of holomorphic mappings*, Contrib. Centro Linceo Inter. Sc. Mat. e Loro Appl. no. 35, Accad. Naz. Lincei (1977), 1–8.

[18] LIE, S.: *Theorie der transformationsgruppen*, Math. Ann. **16** (1880), 441–528.

[19] MERKER, J.: *On the partial algebraicity of holomorphic mappings between two real algebraic sets in the complex euclidean spaces of different dimensions*, Bull. Soc. Math. France **129** (2001), no. 4, 547–591.

[20] PINCHUK, S.: *A boundary uniqueness theorem for holomorphic functions of several complex variables*, Mat. Zametki **15** (1974), 205–212.

[21] PINCHUK, S.: *On proper holomorphic mappings of strictly pseudoconvex domains*, (Russian), Sibirsk. Mat. Z. **15** (1974), 909–917.

[22] PINCHUK, S.: *On the analytic continuation of holomorphic mappings* (Russian), Mat. Sb. (N.S.) **98(140)** (1975) no. 3(11), 416–435, 495–496; English transl. in Math. USSR Sbornik **27** (1975), 375–392.

[23] PINCHUK, S.: *Holomorphic mappings of real-analytic hypersurfaces* (Russian), Mat. Sb. (N.S.) **105(147)** (1978), no. 4, 574–593, 640; English translation in Math. USSR Sbornik **34** (1978), 503–519.

[24] POINCARÉ, H.: *Les fonctions analytiques de deux variables et la représentation conforme*, Rend. Circ. Mat. Palermo, II. Ser **23** (1907), 185–220.

[25] SEGRE, Beniamino: *Intorno al problema di Poincaré della rappresentazione pseudoconforme*, Rend. Acc. Lincei, VI, Ser. **13** (1931), 676–683.

[26] SEGRE, Beniamino: *Questioni geometriche legate colla teoria delle funzioni di due variabili complesse*, Rend. Sem. Mat. Roma, II (memorie), Ser. 7 (1932), no. 2, 59–107.

[27] SHARIPOV, R.; SUKHOV, A.: *On CR mappings between algebraic Cauchy-Riemann manifolds and separate algebraicity for holomorphic functions*, Trans. Amer. Math. Soc. **348** (1996), no. 2, 767–780.

[28] STANTON, N.: *Infinitesimal CR automorphisms of real hypersurfaces*, Amer. J. Math. **118** (1996), no. 1, 209–233.

[29] STORMARK, O.: *Lie's structural approach to PDE systems*, Encyclopædia of mathematics and its applications, vol. 80, Cambridge University Press, Cambridge, 2000, xv+572 pp.

[30] SUKHOV, A.: *On CR mappings of real quadric manifolds*, Michigan Math. J. **41** (1994), no. 1, 143–150.

[31] SUKHOV, A.: *Segre varieties and Lie symmetries*, Math. Z. **238** (2001), no. 3, 483–492.

[32] SUSSMANN, H.J.: *Orbits of families of vector fields and integrability of distributions*, Trans. Amer. Math. Soc. **180** (1973), 171-188.

[33] VITUSHKIN, A.G.: *Holomorphic mappings and the Geometry of Hypersurfaces*, Encyclopædia of Mathematical Sciences, Volume 7, Several Complex Variables, I, Springer-Verlag, Berlin, 1990, pp. 159–214.

[34] WEBSTER, S.M.: *On the mapping problem for algebraic real hypersurfaces*, Invent. Math. **43** (1977), no. 1, 53–68.

[35] WEBSTER, S.M.: *On the reflection principle in several complex variables*, Proc. Amer. Math. Soc. **71** (1978), no. 1, 26–28.

[36] WEBSTER, S.M.: *Holomorphic mappings of domains with generic corners*, Proc. Amer. Math. Soc. **86** (1982), no. 2, 236–240.

[37] WEBSTER, S.M.: *Real submanifolds of $\mathbb{C}^n$ and their complexifications*, Topics in several complex variables, Mexico, 1983, 69–79. Res. Notes in Math. 112, Pitman, Boston, MA, 1985.

Note on double reflection and algebraicity of holomorphic mappings

Joël Merker

Abstract. In this note, our purpose is to establish shortly the algebraicity of a holomorphic mapping between two real algebraic CR manifolds under a double reflection condition which generalizes the classical single reflection. A complete study of various double reflection conditions illustrated by simple examples is also provided.

RÉSUMÉ. Dans cette note, notre but est d'établir brièvement l'algébricité d'une application holomorphe entre deux variétés CR réelles algébriques en supposant qu'une condition de réflexion double, généralisant la condition classique de réflexion simple, est satisfaite. Nous entreprenons une étude complète, supportée par des exemples élémentaires, de la combinatoire des différents théorèmes possibles.

Annales Fac. Sci. Toulouse **9** (2001), no. 5, 689–721.

The goal of this note is to understand double reflection for holomorphic mappings $f : M \to M'$ between real algebraic CR manifolds in complex spaces of different dimensions. We plan to understand it in the general case, that is with and without reducing, shrinking or stratifying the first family of equations "$f(z) \in r_{M'}(f(Q_{\bar z})) := \mathbb{V}'_z$" (see below) which comes from the first reflection.

Thus, let us quickly present the general problematics.

Let $f : M \to M'$ be a holomorphic map between two real algebraic CR manifolds in $\mathbb{C}^n$, $\mathbb{C}^{n'}$ given by the vanishing of real polynomial equations $\rho_j(z, \bar z) = 0$, $1 \le j \le d$, $\rho'_{j'}(z', \bar z') = 0$, $1 \le j' \le d'$, so that $\rho'(f(z), \bar f(\bar w)) = 0$ if $\rho(z, \bar w) = 0$, and let $Q_{\bar w}$, $Q'_{\bar w'}$ denote Segre varieties.

It appears that two crucial observations yield heuristic insights into the problem of finding sufficient conditions (C) such that: (C) $\Rightarrow f$ is algebraic.

First, starting form the natural observation:

$$\text{(I)} \qquad f(z) \in r_{M'}(f(Q_{\bar z})) := \{w' : Q'_{\bar w'} \supset f(Q_{\bar z})\} =: \mathbb{V}'_z$$

(intentionally, we do not specify $w' \in U'$ or $w' \in \mathbb{C}^{n'}$: these two possibilities will be studied hereafter), one is led to guess that the algebraic set $\mathbb{V}'_z$ (which is parametrized by z) is a *finite algebraic determinacy set* for the value of $f(z)$ if $\dim_{f(z)} \mathbb{V}'_z = 0 \,\forall\, z$. Effectively, this classical circumstance entails that f is algebraic (*see* [1,2,7,13]; the set $\mathbb{V}'_0$ is called the *characteristic variety of f at* 0 in [7]). As usual, this determinacy set $\mathbb{V}'_z$ can be constructed simply by applying the tangential Cauchy-Riemann fields of M to the equations $\rho'(f(z), \bar f(\bar w)) = 0$.

The second canonical observation, which is due to Zaitsev [14], is as follows:

$$\text{(II)} \qquad f(z) \in r_{M'}(f(Q_{\bar z})) \cap r^2_{M'}(f(Q_{\bar w})) = \mathbb{V}'_z \cap r_{M'}(\mathbb{V}'_w) =: \mathbb{X}'_{z,\bar w}.$$

Analogously, one is then led to predict that f is algebraic, provided $\dim_{f(z)}\mathbb{X}'_{z,\bar{w}} = 0 \,\forall\, z, w$ such that $\rho(z, \bar{w}) = 0$. We can justify our choice of notation $\mathbb{X}'_{z,\bar{w}}$ (*e.g.* instead of $\mathbb{X}'_{z,w}$) by the fact that the operator $r_{M'}$ conjugates the dependence with respect to parameters. We shall call identity (I) *first reflection* and identity (II) *second reflection*. For reasons explained below, third determination $r^3_{M'}$ or fourth $r^4_{M'}$, *etc.* provide no new information.

Also, let us mention a possible third approach ([8,14]). This approach consists in choosing *smaller* algebraic sets $\mathbb{W}'_z \subset \mathbb{V}'_z$ with nicer properties, in particular to insure the *holomorphic* dependence with respect to the parameter z, in order to compute the second reflection $r_{M'}(\mathbb{V}'_w)$ in an easier way. Of course, such a shrinking of $\mathbb{V}'_z$ in the form $\mathbb{W}'_z$ is (and in fact *must be*) constructive. Using only minors of matrices of holomorphic functions, we will in this paper provide a uniform manner of constructing such a set $\mathbb{W}'_z$ in an unambiguous way. The core of the article is to discuss such a shrinking.

This leads to a third type of determinacy:

$$\text{(III)} \qquad f(z) \in \mathbb{W}'_z \cap r_{M'}(\mathbb{W}'_w) =: \mathbb{Z}'_{z,\bar{w}}.$$

Through various statements and examples, our aim will be thus to compare the three conditions of determinacy of the value $f(z)$ by (I), (II) or (III), to ask which one is the strongest, to ask whether some are necessary, to ask whether it is sufficient to require $\dim_{f(p)}\mathbb{V}'_p = 0$ or $\dim_{f(p)}\mathbb{X}'_{p,\bar{p}} = 0$ or $\dim_{f(p)}\mathbb{Z}'_{p,\bar{p}} = 0$ for a single or all points $p \in M$, *etc.* There will appear a real *combinatorics of possible statements*. Among other things, we will mainly establish that:

1. *Determination of $f(z)$ by $\mathbb{W}'_z$ is strictly finer than by $\mathbb{V}'_z$.*
By this, we mean that $\dim_{f(z)}\mathbb{W}'_z = 0$, $\dim_{f(z)}\mathbb{V}'_z \geq 1 \,\forall\, z$ for some explicit examples of f, M, M', *idem* for **2**, **3**, **4**, **5**, **6** below. Such examples are constructed in the paper.

2. *Determination of $f(z)$ by $\mathbb{Z}'_{z,\bar{w}}$ is strictly finer than by $\mathbb{W}'_z$ (or by $\mathbb{V}'_z$).*

3. *Determination of $f(z)$ by $\mathbb{X}'_{z,\bar{w}}$ is strictly finer than by $\mathbb{V}'_z$.*
In other words, the inclusions $\mathbb{X}'_{z,\bar{w}} \subset \mathbb{V}'_z$ and $\mathbb{Z}'_{z,\bar{w}} \subset \mathbb{W}'_z \subset \mathbb{V}'_z$ are all strict in general. However, none of the inclusion $\mathbb{Z}'_{z,\bar{w}} \subset \mathbb{X}'_{z,\bar{w}}$ and $\mathbb{X}'_{z,\bar{w}} \subset \mathbb{Z}'_{z,\bar{w}}$ is true in general, because:

4. *Determination of $f(z)$ by $\mathbb{X}'_{z,\bar{w}}$ can be strictly finer than by $\mathbb{Z}'_{z,\bar{w}}$.*

5. *Determination of $f(z)$ by $\mathbb{Z}'_{z,\bar{w}}$ can be strictly finer than by $\mathbb{X}'_{z,\bar{w}}$.*
To summarize, we are led to define a fourth determinacy set:

$$\text{(IV)} \qquad f(z) \in \mathbb{W}'_z \cap r_{M'}(\mathbb{V}'_w) = \mathbb{X}'_{z,\bar{w}} \cap \mathbb{Z}'_{z,\bar{w}} =: \mathbb{M}'_{z,\bar{w}},$$

for which we can establish the following:

6. *Determination of $f(z)$ by $\mathbb{M}'_{z,\bar{w}}$ is strictly finer than by $\mathbb{X}'_{z,\bar{w}}$ or by $\mathbb{Z}'_{z,\bar{w}}$.*
In other words, the inclusions $\mathbb{M}'_{z,\bar{w}} \subset \mathbb{X}'_{z,\bar{w}}$ and $\mathbb{M}'_{z,\bar{w}} \subset \mathbb{Z}'_{z,\bar{w}}$ are all strict in general.

Our goal is to find examples which exhibit the nonanalytic behavior of $\mathbb{X}'_{z,\bar{w}}$ with respect to parameters and to explain why the various second reflection conditions (II), (III) and (IV) are inequivalent. Our work deliberately forsakes the point of view of jets, about which the reader is referred to the works [3,8,12,14].

This paper originates from questions the author has asked Dmitri Zaitsev at the Mathematische Forschungsinstitut (Oberwolfach, Deutschland) during the Conference *Reelle Methoden der Komplexen Analysis* (28.02/06.03 1999). The author also acknowledges fruitful conversations with A. Sukhov and S. Damour.

1. Introduction and statement of results

1.1. General assumptions. The general assumptions throughout this article are as follows. We denote by $\mathscr{V}_{\mathbb{C}^n}(p)$ a small open polydisc neighborhood of $p \in \mathbb{C}^n$ and by $\mathscr{V}_{\mathbb{C}^n}(M) := \cup_{q\in M}\mathscr{V}_{\mathbb{C}^n}(q)$. Our object of study is a local holomorphic map $f : \mathscr{V}_{\mathbb{C}^n}(M) \to \mathbb{C}^{n'}$ which induces a map $f : M \to M'$ between two real algebraic CR generic manifolds in $\mathbb{C}^n$, $\mathbb{C}^{n'}$. We assume that M is *minimal in the sense of Tumanov* at one of its points p (equivalently, (M, p) is of finite type in the sense of Bloom-Graham). Even if some of our statements remain true for M non-minimal, we shall not notify it for simplicity. Also, $n \geq 2$.

We set $m := \dim_{CR}M$, $d := \operatorname{codim}_{\mathbb{R}}M$, $m' := \dim_{CR}M'$, $d' := \operatorname{codim}_{\mathbb{R}}M'$, whence $m + d = n$, $m' + d' = n'$. We assume that $m \geq 1$ and $m' \geq 1$.

In suitable coordinates $z \in \mathbb{C}^n$, $z' \in \mathbb{C}^n$, we have $p = 0$, $f(p) = 0$, $M = \{z \in U : \rho(z, \bar{z}) = 0\}$ and $M' = \{z' \in U' : \rho'(z', \bar{z}') = 0\}$, where U and U' are small polydiscs centered at the origin, and where $\rho_j(z, \bar{z}) = \sum_{|\mu|,|\nu|\leq N} \rho_{j,\mu,\nu} z^\mu \bar{z}^\nu$, $1 \leq j \leq d$, $\rho'_{j'}(z', \bar{z}') = \sum_{|\mu'|,|\nu'|\leq N'} \rho_{j',\mu',\nu'} z'^{\mu'} \bar{z}'^{\nu'}$ $1 \leq j' \leq d'$ are *real polynomials* satisfying $\partial\rho_1 \wedge \cdots \wedge \partial\rho_d(0) \neq 0$ and $\partial\rho'_1 \wedge \cdots \wedge \partial\rho'_{d'}(0) \neq 0$.

We can assume that $U = (\varepsilon\Delta)^n$, $\varepsilon > 0$ and $U' = (\varepsilon'\Delta)^{n'}$, $\varepsilon' > 0$, so $\overline{U}$ (conjugate set) $= U$ and $\overline{U}' = U'$.

1.2. Reflection operator. Let $Q_{\bar{w}} = \{z \in U : \rho(z, \bar{w}) = 0\}$ denote Segre variety (we maintain the bar on w in the notation $Q_{\bar{w}}$, *see* [11] for arguments). For every subset $E \subset U$, we define the action of the *reflection operator*:

$$r_M(E) := \{w \in U : Q_{\bar{w}} \supset E\} = \cap_{w\in E} Q_{\bar{w}}, \;\; r_M^2(E) = r_M(r_M(E)), \tag{1.3}$$

say, the *first reflection* of E and its *second reflection* across M. Their basic properties are explained in Lemma 2.1:

1. $r_M(E) \cap E \subset M$.

2. $r_M(r_M(E)) \supset E$.

Observe that $\cap_{k\in\mathbb{N}} r_M^k(E) = E \cap r_M(E)$. A similar $r_{M'}$ is defined across M'. Now, let $z \in Q_{\bar{w}}$. Let $f : M \to M'$ as above. Then $f(Q_{\bar{z}}) \subset Q'_{\overline{f(z)}}$. Also:

1. $f(z) \in f(Q_{\bar{w}}) \subset r^2_{M'}(f(Q_{\bar{w}}))$.
2. $f(Q_{\bar{z}}) \subset Q'_{\overline{f(z)}}$ hence by (1.3)

$$f(z) \in r_{M'}(f(Q_{\bar{z}})) =: \mathbb{V}'_z. \tag{1.4}$$

Consequently also:

$$f(z) \in r_{M'}(f(Q_{\bar{z}})) \cap r^2_{M'}(f(Q_{\bar{w}})) = \mathbb{V}'_z \cap r_{M'}(\mathbb{V}'_w) =: \mathbb{X}'_{z,\bar{w}}. \tag{1.5}$$

Also, a last notification:

$$r_{M'}(f(Q_{\bar{z}})) \subset Q'_{\bar{f}(\bar{w})}, \qquad f(Q_{\bar{w}}) \subset r^2_{M'}(f(Q_{\bar{w}})) \subset Q'_{\bar{f}(\bar{w})}. \tag{1.6}$$

Observe that $r^3_{M'}$, $r^4_{M'}$, ... offer nothing more, because $r^{2k}_{M'}(E') \supset E'$. Notice that the determination $f(z) \in r_{M'}(f(Q_{\bar{z}})) \cap Q'_{\bar{f}(\bar{w})}$ coincides with (1.4), since $r_{M'}(f(Q_{\bar{z}})) \subset Q'_{\bar{f}(\bar{w})}$ by definition.

1.7. Organization. This expanded Section 1 will now be divided in several paragraphs corresponding to various questions and answers that present themselves. We shall shortly present all the problems, all the results, all the technical lemmas, all the examples in the next paragraphs and we shall explain all the major links between them. Finally, the precise checking of all the remaining details and of all the technicalities will be postponed to Sections 2, 3 and 4.

1.8. The results. The fundamental observation is that, as M' is algebraic, both $r_{M'}(E')$ and $r^2_{M'}(E')$ are *complex algebraic* sets for *any* set E', since in (1.3) all the $Q'_{\bar{w}'}$ are. Therefore (1.5) should determine f as an algebraic map of z if $\dim_{f(z)}\mathbb{X}'_{z,\bar{w}} = 0$ for all z, w close to 0, $z \in Q_{\bar{w}}$, a result which is true and which was originally proved in [14] (preprint version) for $\mathbb{Z}'_{z,\bar{w}}$. An analogous result is due to Baouendi-Rothschild [1] and to Baouendi-Ebenfelt-Rothschild [2] with use of $\mathbb{V}'_z := r_{M'}(f(Q_{\bar{z}}))$ only.

Theorem 1.9. *If* $\dim_{f(z)}\mathbb{V}'_z = 0$ *or if* $\dim_{f(z)}\mathbb{X}'_{z,\bar{w}} = 0 \,\forall\, z, w \in \mathscr{V}_{\mathbb{C}^n}(0)$ *with* $z \in Q_{\bar{w}}$, *then* f *is algebraic.*

Of course, the case $\dim_{f(z)}\mathbb{V}'_z = 0$ is contained in the more general case $\dim_{f(z)}\mathbb{X}'_{z,\bar{w}} = 0$, because we clearly have $\mathbb{X}'_{z,\bar{w}} \subset \mathbb{V}'_z$. Our proof of Theorem 1.9 will be achieved shortly, thanks to a partial algebraicity theorem proved in [10,13]. We shall indeed establish that the condition $\dim_{f(z)}\mathbb{X}'_{z,\bar{w}} = 0$, $\forall\, z, w \in \mathscr{V}_{\mathbb{C}^n}(0)$, $z \in Q_{\bar{w}}$ implies that f is complex algebraic on each Segre variety in some open set $V := \mathscr{V}_{\mathbb{C}^n}(0)$ and then apply:

Theorem 1.10. ([10]) *Let* $g \in \mathscr{O}(V, \mathbb{C})$ *and let* M *be minimal at* 0. *Then* g *is algebraic if and only if* $g|_{Q_{\bar{w}}\cap V}$ *is algebraic* $\forall\, w \in V$.

We also obtain an equivalent version of Theorem 1.9:

Theorem 1.11. ([10,14]) *If* $\dim_{f(z)}\mathbb{X}'_{z,\bar{z}} = 0 \,\forall\, z \in M \cap \mathscr{V}_{\mathbb{C}^n}(0)$, *then* f *is algebraic.*

Theorem 1.11 admits several applications and covers several known results (*e.g.* [1,2,13,14]). In truth, some unexpected phenomena and some subtle things are hidden behind Theorem 1.11. Our work is aimed to reveal most of them.

1.12. First remarks and questions. This Theorem 1.11 will be deduced from Theorem 1.9 by proving that there exist points $p \in M$ arbitrarily close to 0 such that $\dim_{f(z)} \mathbb{X}'_{z,\bar{w}} = 0 \, \forall \, z, w \in \mathscr{V}_{\mathbb{C}^n}(p)$, $z \in Q_{\bar{w}}$, *see* Proposition 1.23 below. The main difficulty here is that the set $\mathbb{X}'_{z,\bar{w}}$ is *not* in general holomorphically parametrized by $z, \bar{w} \in U$, $z \in Q_{\bar{w}}$, in the sense that there would exist analytic equations such that $\mathbb{X}'_{z,\bar{w}} = \{z' : \lambda_j(z, \bar{w}, z') = 0, 1 \leq j \leq J\}$. In fact, the existence of such equations would readily yield the following upper semi-continuity property:

(1.13)
$$\dim_{f(0)} \mathbb{X}'_{0,0} = 0 \Rightarrow \left\langle \dim_{f(z)} \mathbb{X}'_{z,\bar{w}} = 0, \ \forall \, z, w \in \mathscr{V}_{\mathbb{C}^n}(0), z \in Q_{\bar{w}} \right\rangle .$$

And (1.13) above would immediately yield that Theorem 1.9 implies Theorem 1.11. However, (1.13) fails to hold in general. Our goal is therefore to explore the properties of the map $(z, \bar{w}) \mapsto \mathbb{X}'_{z,\bar{w}}$. Let us denote $\mathscr{M} := \{z \in Q_{\bar{w}}\} = \{(z, \bar{w}) \in U \times U : \rho(z, \bar{w}) = 0\}$, which is a complex-algebraic d-codimensional submanifold of $U \times U$, called the *extrinsic complexification* of M. To be exhaustive, we wish also to compare the following twelve determinacy conditions:

$$\mathscr{C}^4(\mathscr{M}) \ : \ \dim_{f(z)} \mathbb{M}'_{z,\bar{w}} = 0 \ \forall \, (z, \bar{w}) \in \mathscr{M} \quad C^4(M) \ : \ \dim_{f(p)} \mathbb{M}'_{p,\bar{p}} = 0 \ \forall \, p \in M$$
$$\mathscr{C}^3(\mathscr{M}) \ : \ \dim_{f(z)} \mathbb{X}'_{z,\bar{w}} = 0 \ \forall \, (z, \bar{w}) \in \mathscr{M} \quad C^3(M) \ : \ \dim_{f(p)} \mathbb{X}'_{p,\bar{p}} = 0 \ \forall \, p \in M$$
$$\mathscr{C}^2(\mathscr{M}) \ : \ \dim_{f(z)} \mathbb{Z}'_{z,\bar{w}} = 0 \ \forall \, (z, \bar{w}) \in \mathscr{M} \quad C^2(M) \ : \ \dim_{f(p)} \mathbb{Z}'_{p,\bar{p}} = 0 \ \forall \, p \in M$$
$$\mathscr{C}^1(\mathscr{M}) \ : \ \dim_{f(z)} \mathbb{V}'_{z,\bar{w}} = 0 \ \forall \, (z, \bar{w}) \in \mathscr{M} \quad C^1(M) \ : \ \dim_{f(p)} \mathbb{V}'_{p} = 0 \ \forall \, p \in M$$

and also:

$$C^4_p \ : \ \dim_{f(p)} \mathbb{M}'_{p,\bar{p}} = 0, \quad C^3_p \ : \ \dim_{f(p)} \mathbb{X}'_{p,\bar{p}} = 0,$$
$$C^2_p \ : \ \dim_{f(p)} \mathbb{Z}'_{p,\bar{p}} = 0, \quad C^1_p \ : \ \dim_{f(p)} \mathbb{V}'_{p} = 0.$$

As a preliminary in this exposition, we will first recall and state some of the nice properties of the mapping $z \mapsto \mathbb{V}'_z$.

1.14. Analytic dependence of $z \mapsto \mathbb{V}'_z$. By $\mathscr{A}_n(U)$, we denote the ring of polynomial mappings from U to $\mathbb{C}$, or more generally, of holomorphic algebraic functions over U (*see* [1,2]). By $\mathscr{O}_n(U)$, we denote the ring of plain holomorphic mapping from U to $\mathbb{C}$. By a slight abuse of notation, we denote by $\mathscr{O}_n(U) \times \mathscr{A}_n(U)$ the ring of functions $g(z, w)$ which are holomorphic with respect to z and polynomial with respect to w. Also, we write $\chi \in \overline{\mathscr{O}}_n(U)$ if χ is antiholomorphic with respect to the variable $w \in U$.

By the well-known process of applying the tangential Cauchy-Riemann operators to the identity $\rho'(f(z), \bar{f}(\bar{w})) = 0$ as $\rho(z, \bar{w}) = 0$, one can establish that the map $z \mapsto \mathbb{V}'_z$ is analytic (algebraic here because M, M' are algebraic):

Proposition 1.15. *There exist $J \in \mathbb{N}_*$ and functions $r_j(z, \bar{w}, z') \in \mathscr{A}_n(U) \times \overline{\mathscr{O}}_n(U) \times \mathscr{A}_{n'}(U')$, $1 \leq j \leq J$, such that $\forall\ (z, w) \in U \times U$ with $z \in Q_{\bar{w}}$, then:*

(1.16)
$$r_{M'}(f(Q_{\bar{z}})) = \{z' \in U' : r_j(z, \bar{w}, z') = 0, 1 \leq j \leq J\} = \mathbb{V}'_z =: \S^1_{z,\bar{w}}.$$

Here, we write "vectorially" r for $(r_1, \ldots, r_J)$ and we have set:

$$\S^1 := \{(z, \bar{w}, z') \in U \times \overline{U} \times U' : r(z, \bar{w}, z') = 0\}. \tag{1.17}$$

Then in (1.16) above, $\S^1_{z,\bar{w}}$ simply denotes the fiber of $\S^1$. Although the equations (1.16) of $\mathbb{V}'_z$ do depend in general of some $\bar{w}$ such that $z \in Q_{\bar{w}}$, the zero-set $\mathbb{V}'_z$ appears to be *independent of* $\bar{w}$ provided $(z, \bar{w}) \in \mathscr{M}$. This is in fact clear because by its definition, it is the set equal to $r_{M'}(f(Q_{\bar{z}}))$. But the analytic equations $r(z, \bar{w}, z') = 0$ justify the notation $\S^1_{z,\bar{w}}$ (not to be confused with $\mathbb{V}'_z$).

Proposition 1.15 and the upper semi-continuity of the fiber dimension of a holomorphic map immediately yield the following:

(1.18)
$$C^1_0 \Rightarrow \mathscr{C}^1(\mathscr{M} \cap (V \times V)) \text{ and } C^1_0 \Rightarrow C^1(M \cap V) \text{ for some } V = \mathscr{V}_{\mathbb{C}^n}(0) \subset U.$$

Corollary 1.19. *If $\dim_{f(z)} \S^1_{z,\bar{w}} = 0$ for some $z \in U$ and some $w \in Q_{\bar{z}}$, then there exists $\mathscr{N} \subset \mathscr{M}$ a proper complex analytic subvariety such that the map*

$$\mathscr{V}_{\mathbb{C}^{n'}}(f(z)) \ni z' \mapsto r(z, \bar{w}, z') \in \mathbb{C}^J \tag{1.20}$$

is an immersion at $f(z)$, for all $(z, \bar{w}) \in \mathscr{M} \backslash \mathscr{N}$.

This is of course equivalent to the generic rank of the mapping

$$\mathscr{M} \times \mathbb{C}^{n'} \ni (z, \bar{w}, z') \mapsto (z, \bar{w}, r(z, \bar{w}, z')) \in \mathscr{M} \times \mathbb{C}^J \tag{1.21}$$

be maximal equal to $2m + d + n'$. Just one further remark. As $M \cong \{(z, \bar{z}) \in \mathscr{M}\}$ embeds as a real algebraic maximally real submanifold of $\mathscr{M}$, then $\mathscr{N} \cap M := N$ is also a proper real analytic subset of M. In particular, after applying the implicit function theorem to (1.20) near $(p, \bar{p})$, we obtain the existence of a neighborhood $V_p := \mathscr{V}_{\mathbb{C}^n}(p)$ and of holomorphic, partially algebraic functions $\Psi'_\nu(z, \bar{w}) \in \mathscr{A}_n(V_p) \times \overline{\mathscr{O}}_n(V_p)$, $1 \leq \nu \leq n'$ such that $f_\nu(z) = \Psi'_\nu(z, \bar{w})$, $\nu = 1, \ldots, n'$, $z \in Q_{\bar{w}}$ (using elimination theory, one can even assume that the Ψ'_ν are polynomial with respect to z). Fixing w, this shows that f is algebraic on Segre varieties and Theorem 1.10 then applies to show that f is algebraic. In particular, we recover the main theorem of [2] with a slight variation. For further properties and knowledge about the geometry of $\S^1$ (the first reflection variety), we refer to [1,2,3,4,6,7,10,14].

1.22. Almost everywhere analytic dependence of $(z, \bar{w}) \mapsto \mathbb{X}'_{z,\bar{w}}$. Now, we present the way how $(z, \bar{w}) \mapsto \mathbb{X}'_{z,\bar{w}}$ varies:

Proposition 1.23. *If* $\dim_{f(z)}\mathbb{X}'_{z,\bar{z}} = 0$, $\forall\, z \in M$, *then there exists a dense open subset* $D_M \subset M$ *such that*

$(*)$ $\forall\, p \in D_M$, $\exists\, U_p = \mathscr{V}_{\mathbb{C}^n}(p)$, $\exists\, U'_{p'} = \mathscr{V}_{\mathbb{C}^{n'}}(p' = f(p))$, $\exists\, K \in \mathbb{N}_*$, $\exists\, (s_k)_{1\leq k\leq K}$, $s_k \in \overline{\mathscr{O}}_n(U_p) \times \mathscr{O}_n(U_p) \times \mathscr{A}_{n'}(U'_{p'})$ *such that, if* $\S^1 = \{r(z,\bar{w},z') = 0\}$, *then*

$\forall\, z, w \in U_p$, $z \in Q_{\bar{w}}$, $\forall\, w, z_1 \in U_p$, $w \in Q_{\bar{z}_1}$,

$$U'_{p'} \cap \mathbb{X}'_{z,\bar{w}} \subset \{z' \in U'_{p'} : r(z,\bar{w},z') = 0, s(\bar{w},z_1,z') = 0\} =: \S^2_{z,\bar{w},z_1} \tag{1.24}$$

and such that the graph of f *over* $\mathscr{M}\sharp\mathscr{M} := \{(z,\bar{w},z_1) : \rho(z,\bar{w}) = 0, \rho(w,\bar{z}_1) = 0\}$ *intersected with* $U_p \times \overline{U}_p \times U_p$ *satisfies*

$$\Gamma r(f) = \{(z,\bar{w},z_1,f(z))\} = \{(z,\bar{w},z_1,z') : z' \in \S^2_{z,\bar{w},z_1}\} =: \S^2. \tag{1.25}$$

Furthermore, there exist similar analytic equations $r(z,\bar{w},z') = 0$, $s(\bar{w},z_1,z') = 0$ *such that*

$(**)$ $\forall\, (z,\bar{w},z_1) \in (\mathscr{M}\sharp\mathscr{M}) \cap (U_p \times \overline{U}_p \times U_p)$, *the map*

$$\mathscr{V}_{\mathbb{C}^{n'}}(f(z)) \ni z' \mapsto (r(z,\bar{w},z'), s(\bar{w},z_1,z')) \in \mathbb{C}^{J+K} \tag{1.26}$$

is an immersion at $f(z)$.

We invite the reader to notice that the dependence of $\S^2$ is holomorphic with respect to z and antiholomorphic with respect to w, which justifies and explains the notation $\mathbb{X}'_{z,\bar{w}}$. This technical proposition, whose proof is postponed to Section 3, appeals several remarks. The first one is: what is the structure of the closed set $M\backslash D_M \subset M$ exactly? Surprisingly, it is *not* an analytic set, it is in general a *subanalytic set*. Leaving this question for a while, we shall return to it in Examples 1.66 and 1.68 below. The second remark is: we prove Theorem 1.9 without using Proposition 1.23. This proposition is indeed used only to prove that Theorem 1.9 $\Rightarrow$ Theorem 1.11. Next, a third remark. As $\Gamma r(f) \equiv \S^2$, the projection $\pi : \S^2 (\subset U_p \times \overline{U}_p \times U_p \times U'_{p'}) \to U_p \times \overline{U}_p \times U_p$ is submersive. The zero locus $\S^2 \equiv \Gamma r(f)$ is smooth, but the equations defining $\S^2$ can be non-reduced. After taking the reduced complex space $\operatorname{Red} \S^2$, we obtain the immersion property $(**)$ of Proposition 1.23 for $z, w, z_1 \in \mathscr{V}_{\mathbb{C}^n}(p)$. Of course, the equations $s(\bar{w},z_1,z') = 0$ of which Proposition 1.23 asserts the existence are clearly those for $r^2_{M'}(f(Q_{\bar{w}}))$, while as before $r(z,\bar{w},z')$ come for $r_{M'}(f(Q_{\bar{z}}))$. Now, we come to the most important remark. Thanks to the analytic parametrization (1.24), we have:

$$\left\langle \dim_{f(p)}\S^2_{p,\bar{p},p} = 0 \right\rangle \Rightarrow \left\langle \dim_{f(z)}\S^2_{z,\bar{w},z_1} = 0,\ \forall\, z, w, z_1 \in \mathscr{V}_{\mathbb{C}^n}(p) \subset U_p \right\rangle. \tag{1.27}$$

We therefore obtain the desired semi-continuity property:

$$\left\langle \dim_{f(z)}\mathbb{X}'_{z,\bar{z}} = 0,\ \forall\, z \in M \right\rangle \Rightarrow \left\langle \dim_{f(z)}\mathbb{X}'_{z,\bar{w}} = 0,\ \forall\, z, w \in \mathscr{V}_{\mathbb{C}^n}(p), z \in Q_{\bar{w}} \right\rangle. \tag{1.28}$$

In summary, the reduction of Theorem 1.11 to Theorem 1.9 *via* Proposition 1.23 is completed.

1.29. Solvability of f over a dense open set. The fundamental remark is that after solving $f(z)$ from $(**)$ of Proposition 1.23 at $q \in U_p$, $p \in D_M$, *i.e.* solving $f(z)$ from the collection of equations:

$$r_j(z, \bar{w}, f(z)) = 0, \ 1 \leq j \leq J, \ s_k(\bar{w}, z_1, f(z)) = 0, \ 1 \leq k \leq K, \tag{1.30}$$

where $z \in Q_{\bar{w}}$, $w \in Q_{\bar{z}_1}$, we obtain:

Corollary 1.31. $\forall\, p \in D_M$, $\forall\, q \in U_p = \mathscr{V}_{\mathbb{C}^n}(p)$, $\exists\, W_q = \mathscr{V}_{\mathbb{C}^n}(q)$, $\exists\, \Psi'_\nu(z, \bar{w}, z_1) \in \mathscr{A}_n(W_q) \times \overline{\mathscr{O}}_n(W_q) \times \mathscr{O}_n(W_q)$, $1 \leq \nu \leq n'$, *such that*

$$f_1(z) = \Psi'_1(z, \bar{w}, z_1), \ldots, f_{n'}(z) = \Psi'_{n'}(z, \bar{w}, z_1), \tag{1.32}$$

$\forall\, z, w, z_1 \in W_q$, $z \in Q_{\bar{w}}$, $w \in Q_{\bar{z}_1}$.

Then equation (1.32) immediately shows that f is algebraic on each Segre variety $Q_{\bar{w}} \cap W_q$: just fix $\bar{w}, z_1$ in (1.32) and let $z \in Q_{\bar{w}}$ vary. Thus, again Theorem 1.10 applies, as in **1.14** above.

1.33. Algebraicity of f. Theorem 1.11 admits the following main corollary:

Theorem 1.34. ([6,10,14]) *If M' does not contain complex algebraic sets of positive dimension, then f is algebraic.*

Proof. Indeed, we have:

1. $\mathbb{X}'_{z,\bar{z}} = r_{M'}(f(Q_{\bar{z}})) \cap r^2_{M'}(f(Q_{\bar{z}})) \subset M'$ (by $r_{M'}(E') \cap r^2_{M'}(E') \subset M'$ $\forall\, E'$).

2. $r_{M'}(f(Q_{\bar{z}}))$, $r^2_{M'}(f(Q_{\bar{z}}))$, $\mathbb{X}'_{z,\bar{z}}$ are complex algebraic sets through $f(z)$.

Consequently, $\dim_{f(z)} \mathbb{X}'_{z,\bar{z}} = 0 \ \forall\, z \in M$ necessarily holds under the assumption of Theorem 1.34: Theorem 1.11 then applies. □

Remark. The author obtains a completely different proof of Theorem 1.34 in [10]. A similar proof is given in [6], but for M being Segre-transversal instead of being minimal.

1.35. Comparison of $\mathbb{V}'_z$, $\mathbb{X}'_{z,\bar{w}}$. We have now completed the presentation of the main steps in the proof of Theorem 1.11. Next, we come to the comparison between the zero dimension conditions about $\mathbb{V}'_z$ and $\mathbb{X}'_{z,\bar{w}}$. It is easy to see that there exist many examples of f, M, M', U, U' such that $\dim_{f(z)} \mathbb{V}'_z \geq 1$, $\forall\, z \in U$ and $\dim_{f(z)} \mathbb{X}'_{z,\bar{w}} = 0$, $\forall\, z, w \in U$, $z \in Q_{\bar{w}}$. Consequently the condition $\mathscr{C}^3(\mathscr{M})$ is strictly finer than $\mathscr{C}^1(\mathscr{M})$ (same fact about $\mathscr{C}^2(\mathscr{M})$ or $\mathscr{C}^4(\mathscr{M})$). Here is such an example (exercise).

Example 1.36. Take $M : z_4 = \bar{z}_4 + i z_1 \bar{z}_1$ in $\mathbb{C}^2_{(z_1,z_4)}$, $f(z_1, z_4) = (z_1, 0, 0, z_4) \in \mathbb{C}^4$, and the hypersurface

$$M' : \ z'_4 = \bar{z}'_4 + i z'_1 \bar{z}'_1 + i {z'_1}^2 \bar{z}'_3 + i \bar{z}'^2_1 z'_3 + i z'_2 \bar{z}'_3 + i \bar{z}'_2 z'_3. \tag{1.37}$$

It is also known that the second reflection is superfluous when $n = n'$ and f is a biholomorphic map (*cf.* [1,2,3,14]) or if one assumes directly that $\dim_{f(z)} \mathbb{V}'_z = 0$ (*cf.* [7]).

1.38. Comparisons between $\mathbb{V}'_z, \mathbb{W}'_z, \mathbb{Z}'_{z,\bar{w}}, \mathbb{X}'_{z,\bar{w}}$. Yet another strategy (*cf.* [8,14]) consists in replacing (when possible) the set

$\S^1 = \{(z,\bar{w},z') : r(z,\bar{w},z') = 0\}$ by some smaller complex analytic set $\widetilde{\S}^1 = \{(z,\bar{w},z') : \tilde{r}(z,\bar{w},z') = 0\} \subset \S^1$ such that:

1. $\tilde{r} \in \mathscr{A}_n(U) \times \overline{\mathscr{O}}_n(U) \times \mathscr{A}_{n'}(U')$.

2. $\Gamma r(f) =$ the graph of $f = \{(z,\bar{w},f(z)) : (z,\bar{w}) \in \mathscr{M}\}$ is contained in $\widetilde{\S}^1$.

3. $\widetilde{\S}^1$ is obtained in a constructive way.

The set $\widetilde{\S}^1$ should really be given by means of an explicit construction, because $\S^1$ is the concrete datum from which one tries to deduce that z' is solvable in terms of $z,\bar{w}$. Constructing such a set $\widetilde{\S}^1$, one can hope that $\dim_{f(z)} \widetilde{\S}^1_{z,\bar{w}} = 0$. For instance, if $\Gamma r(f)$ is contained in the singular locus $\mathrm{Sing}(\S^1)$, which is computable in terms of $r(z,\bar{w},z')$, since $\S_1$ is explicitely given, it is possible to shrink $\S^1$ and to replace it by $\widetilde{\S}^1 := \mathrm{Sing}(\S^1)$, obtaining *new, possibly finer* equations $\tilde{r}(z,\bar{w},f(z)) = 0$. In [14] (preprint version), $\S^1$ is also shrunk more again, still in a constructive way, in order that $\widetilde{\S}^1$ becomes a "holomorphic family". Therefore, there might exist many different such $\widetilde{\S}^1$ depending on the way how $\S^1$ is shrunk in a constructive way. However in the end of Section 3 we propose a uniform unambiguous method, which uses only elementary tools: minors and the uniqueness principle (but not passing to the filtration by singular complex subspaces).

If $\dim_{f(z)} \widetilde{\S}^1_{z,\bar{w}} \geq 1$, denote $\mathbb{W}'_{z,\bar{w}} := \{z' \in U' : \tilde{r}(z,\bar{w},z') = 0\} = \widetilde{\S}^1_{z,\bar{w}}$ and

$$\mathbb{Z}'_{z,\bar{w}} := \mathbb{W}'_{z,\bar{w}} \cap r_{M'}(\mathbb{W}'_{w,\bar{z}_1}), \qquad z \in Q_{\bar{w}},\ w \in Q_{\bar{z}_1}. \tag{1.39}$$

Then $f(z) \in \mathbb{Z}'_{z,\bar{w}}$ because

(1.40)
$$f(z) \in \mathbb{W}'_{z,\bar{w}} \subset \mathbb{V}'_z$$
$$r_{M'}(\mathbb{W}'_{z,\bar{w}}) \supset r_{M'}(\mathbb{V}'_z) \text{ (by } r_{M'}(E') \supset r_{M'}(F') \text{ if } E' \subset F')$$
$$r_{M'}(\mathbb{W}'_{w,\bar{z}_1}) \supset r_{M'}(\mathbb{V}'_w) = r^2_{M'}(f(Q_{\bar{w}})) \supset f(Q_{\bar{w}}) \ni f(z)$$
$$f(z) \in \mathbb{W}'_{z,\bar{w}} \cap r_{M'}(\mathbb{W}'_{w,\bar{z}_1}) = \mathbb{Z}'_{z,\bar{w},z_1}.$$

The gain in reducing $\S^1 \mapsto \widetilde{\S}^1$ lies in the fact that one can easily insure that $(w,\bar{z}_1) \mapsto r_{M'}(\mathbb{W}'_{w,\bar{z}_1})$ becomes an analytic parametrization (or a "holomorphic family") by having first a nice representation of $\mathbb{W}'_{z,\bar{w}}$:

Proposition 1.41. ([8,14]) *There exists $\mathscr{N} \subset \mathscr{M}$ a proper complex analytic subset such that $\forall\, p = (z_p,\bar{w}_p) \in \mathscr{M} \backslash \mathscr{N}$ $\exists\, \mathscr{U}_p = \mathscr{V}_{\mathscr{M}}(p)$, $\exists\, n'_1, n'_2 \in \mathbb{N}$, $n'_1 + n'_2 = n'$, $\exists\, \Phi'_\nu(z,\bar{w},z') \in \mathscr{A}_n(z) \times \mathscr{O}_n(\bar{w}) \times \mathscr{A}_{n'}(z'_1)$, $(z,\bar{w}) \in \mathscr{U}_p$, $(w,\bar{z}_1) \in \mathscr{U}_p$, $1 \leq \nu \leq n'_1$, such that*

(1.42)
$$\{(z,\bar{w},f(z)) : (z,\bar{w}) \in \mathscr{M}\} \subset \{(z,\bar{w},z') : z'_2 = \Phi'(z,\bar{w},z'_1)\} \subset \{r(z,\bar{w},z') = 0\}.$$

In [8], it is established that the representation (1.42) is unique: the set $\{z'_2 = \Phi'(z,\bar{w},z'_1)\}$ being the maximal for inclusion among all the sets of the form $\Lambda = \{z'_2 = \Psi'(z,\bar{w},z'_1)\}$ (for some splitting of the coordinates z') satisfying $\Gamma r(f) \subset \Lambda \subset \S^1$. Let now $p \in M \backslash (N := \mathscr{N} \cap M)$ and let $U_p = \mathscr{V}_{\mathbb{C}^n}(p)$

with $\mathscr{U}_p \subset U_p \times U_p$. The representation (4.2) yields after some easy work (*see* [8,14]) that there exist $K \in \mathbb{N}_*$, $(s_k)_{1\le k\le K} \in \overline{\mathscr{O}}_n(U_p) \times \mathscr{O}_n(U_p) \times \mathscr{A}_{n'}(U'_{p'})$ such that $\forall\, z, w \in U_p$, $z \in Q_{\bar w}$, $\forall\, w, z_1 \in U_p$, $w \in Q_{\bar z_1}$,

$$\mathbb{Z}'_{z,\bar w,z_1} = \{z' \in U'_{p'} : r(z,\bar w,z') = 0,\ s(\bar w, z_1, z') = 0\}. \tag{1.43}$$

As in Proposition 1.23, we have got the analytic dependence of the map $(z,\bar w) \mapsto \mathbb{Z}'_{z,\bar w}$ (again, the set $\mathbb{Z}'_{z,\bar w,z_1}$ does not depend as a set of z_1 if $(z,\bar w,z_1) \in \mathscr{M}\sharp\mathscr{M}$ and it coincides with $\mathbb{Z}'_{z,\bar w}$ which was defined in a set theoretical way). We will come back later to the construction of Φ', *see* Proposition 1.74 below.

1.44. Fundamental remark. The constructiveness of a shrinking $\S^1 \mapsto \widetilde{\S}^1$ is essential. One is temptated to introduce $\S^1_{min} :=$ the minimal (for inclusion) $\mathscr{A}_n \times \overline{\mathscr{O}}_n \times \mathscr{A}_{n'}$-set contained in $\S^1$ satisfying $\Gamma r(f) \subset \S^1_{min} \subset \S^1$, *i.e.* the intersection of all $\widetilde{\S}^1$, even those which are not constructive, and to put $\mathbb{Z}_{min,z,\bar w,z_1}{}' := \S^1_{min,z,\bar w} \cap r_{M'}(\S^1_{min,w,\bar z_1})$. However, the equations $r_{min}(z,\bar w,z') = 0$ being not known from the datum $\S^1$ in general and not constructible in an explicit way, it is quite impossible to deduce from $f(z) \in \mathbb{Z}_{min,z,\bar w,z_1}{}'$ anything. Not to mention that anyway if f was algebraic from the beginning, then $r_{min} := z' - f(z)$ would have been convenient and the condition $\dim_{f(z)}\mathbb{Z}_{min,z,\bar w,z_1}{}' = 0$ (here $\dim_{f(z)}\S^1_{min,z,\bar w,z_1} = 0$) then becomes surprisingly tautological!

1.45. Properties of $\mathbb{Z}'_{z,\bar w}$. Before entering into further discussions, let us summarize the properties of $\mathbb{Z}'_{z,\bar w}$ as follows (*see* also Proposition 1.74).

Theorem 1.46. (1) *The set of points where $(z,\bar w) \mapsto \mathbb{Z}'_{z,\bar w}$ is not holomorphic is a proper complex analytic subset $\mathscr{N}$ of $\mathscr{M}$. Let $N := \mathscr{N} \cap M$.*

(2) *If $\dim_{f(z)}\mathbb{Z}'_{z,\bar z} = 0\ \forall\, z \in \mathscr{V}_{\mathbb{C}^n}(0) \cap M$, then $\dim_{f(z)}\mathbb{Z}'_{z,\bar z} = 0$ for z outside a proper real analytic subvariety N_1 of $M\backslash N$.*

(3) *If $\dim_{f(p)}\mathbb{Z}'_{p,\bar p} = 0$ at some point $p \in M\backslash(N \cup N_1)$, then f is algebraic.*

Remark. That the bad set $\mathscr{N}$ is analytic is a property which is specific to $\mathbb{Z}'_{z,\bar w}$. For $\mathbb{X}'_{z,\bar w}$, the bad set $M\backslash D_M$ is definitely not analytic, see Example 1.68 below.

1.47. Discussion. We can now summarize the main result in [14] (preprint version).

Theorem 1.48. ([14]) *If $\dim_{f(p)}\mathbb{Z}'_{p,\bar p} = 0\ \forall\, p \in \mathscr{V}_{\mathbb{C}^n}(0) \cap M$, then f is algebraic.*

This theorem also implies Theorem 1.34 (which is the main application of double reflection). Indeed, a possible proof of Theorem 1.34 starting from Theorem 1.48 above can be achieved exactly as we did *supra* in **1.33**, because the intersection $\mathbb{Z}'_{p,\bar p} = \mathbb{W}'_{p,\bar p} \cap r_{M'}(\mathbb{W}'_{p,\bar p}) \subset M'$ must also be a zero-dimensional complex algebraic set.

1.49. Reverse inclusions. Now, we return to comparison of $\mathbb{X}'_{z,\bar w}$ with $\mathbb{Z}'_{z,\bar w}$. If $\dim_{f(z)}\mathbb{W}'_{z,\bar w} \ge 1\ \forall\, z \in U$ (so second reflection is needed), one can

expect that

$$\left\langle \dim_{f(z)} \mathbb{X}'_{z,\bar{w}} = 0,\ \forall\, z \right\rangle \Rightarrow \left\langle \dim_{f(z)} \mathbb{Z}'_{z,\bar{w}} = 0,\ \forall\, z \right\rangle, \tag{1.50}$$

i.e. that the study of $\mathbb{Z}'_{z,\bar{w}}$ is sufficient to get a complete proof of Theorem 1.9. Nevertheless, **two inclusions of opposite sense enter in competition**

$$\mathbb{W}'_{z,\bar{w}} \subset \S^1_{z,\bar{w}} \quad \text{and} \quad r_{M'}(\mathbb{W}'_{z,\bar{w}}) \supset r_{M'}(\S^1_{z,\bar{w}}) \tag{1.51}$$

so that it is not clear how

$$\mathbb{X}'_{z,\bar{w},z_1} = \S^1_{z,\bar{w}} \cap r_{M'}(\S^1_{w,\bar{z}_1}) \quad \text{and} \quad \mathbb{Z}'_{z,\bar{w},z_1} = \mathbb{W}'_{z,\bar{w}} \cap r_{M'}(\mathbb{W}'_{w,\bar{z}_1}) \tag{1.52}$$

could be comparable. Indeed, implication (1.50) is simply untrue:

Example 1.53. There exist f, M, M' such that:

$$\dim_{f(z)} \mathbb{X}'_{z,\bar{w},z_1} = 0,\ \forall\, z \quad \text{but} \quad \dim_{f(z)} \mathbb{Z}'_{z,\bar{w},z_1} \geq 1,\ \forall\, z. \tag{1.54}$$

Explicitely, take: $M : z_5 = \bar{z}_5 + i z_1 \bar{z}_1$ in $\mathbb{C}^2_{(z_1,z_5)}$, $f(z_1, z_5) = (z_1, 0, 0, 0, z_5)$, and:

$$M' : \quad z'_5 = \bar{z}'_5 + i z'_1 \bar{z}'_1 + i {z'_1}^2 \bar{z}'_3 \bar{z}'_4 + i \bar{z}'^2_1 z'_3 z'_4 + i {z'_3}^2 \bar{z}'^2_2 + i \bar{z}'^2_3 {z'_2}^2 + \\ + i \bar{z}'^3_3 z'^3_4 + i z'^3_3 \bar{z}'^3_4. \tag{1.55}$$

In conclusion, the determination of $f(z)$ by $\mathbb{X}'_{z,\bar{w},z_1}$ can be strictly finer than by $\mathbb{Z}'_{z,\bar{w},z_1}$ (for the details, see Section 4). And quite surprisingly, it is also true that determination of $f(z)$ by $\mathbb{Z}'_{z,\bar{w}}$ can be strictly finer than by $\mathbb{X}'_{z,\bar{w}}$.

Example 1.56. There exist f, M, M' such that $\dim_{f(z)} \mathbb{Z}'_{z,\bar{w}} = 0\ \forall\, z$ but $\dim_{f(z)} \mathbb{X}'_{z,\bar{w}} \geq 1\ \forall\, z$. To be explicit, take $M : z_4 = \bar{z}_4 + i z_1 \bar{z}_1$ in $\mathbb{C}^2_{(z_1,z_4)}$, $f(z_1, z_4) = (z_1, 0, 0, z_4) \in \mathbb{C}^4$, and:

$$M' : \quad z'_4 = \bar{z}'_4 + i z'_1 \bar{z}'_1 + i {z'_1}^2 \bar{z}'_2 \bar{z}_3 + i \bar{z}'^2_1 z'_2 z'_3. \tag{1.57}$$

In summary:

$$\left\langle \dim_{f(z)} \mathbb{X}'_{z,\bar{w}} = 0,\ \forall\, z \right\rangle \not\Leftarrow \not\Rightarrow \left\langle \dim_{f(z)} \mathbb{Z}'_{z,\bar{w}} = 0,\ \forall\, z \right\rangle. \tag{1.58}$$

Consequently, it is justified to introduce:

$$\mathbb{M}'_{z,\bar{w}} := \mathbb{W}'_{z,\bar{w}} \cap r_{M'}(\mathbb{V}'_w), \tag{1.59}$$

where

$$\mathbb{W}'_{z,\bar{w}} = \widetilde{\S}^1_{z,\bar{w}}, \tag{1.60}$$

for a constructive shrinking $\widetilde{\S}^1$ of $\S^1$. (Of course, different such shrinkings may exist, which depend on the conditions that are imposed; the choice $\widetilde{\S}^1 = \S^1$ can always be done; our examples illustrate well the phenomenon.)

1.61. Comparison between $\mathbb{M}'_{z,\bar{w}}$ and $\mathbb{Z}'_{z,\bar{w}}$, $\mathbb{X}'_{z,\bar{w}}$. Notice that $\mathbb{M}'_{z,\bar{w}} = \mathbb{X}'_{z,\bar{w}} \cap \mathbb{Z}'_{z,\bar{w}}$. Now it is clear that:

(1.62)

$$\left\langle \dim_{f(z)} \mathbb{M}'_{z,\bar{w}} = 0,\ \forall\, z, w, z \in Q_{\bar{w}} \right\rangle \Leftarrow \left\langle \dim_{f(z)} \mathbb{X}'_{z,\bar{w}} = 0,\ \forall\, z, w, z \in Q_{\bar{w}} \right\rangle$$

(1.63)
$$\left\langle \dim_{f(z)}\mathbb{M}'_{z,\bar{w}} = 0,\ \forall\, z,w,z\in Q_{\bar{w}}\right\rangle \Leftarrow \left\langle \dim_{f(z)}\mathbb{Z}'_{z,\bar{w}} = 0,\ \forall\, z,w,z\in Q_{\bar{w}}\right\rangle .$$

Our examples also show that the reverse implications $\Rightarrow$ are both untrue.

1.64. Summarizing tabulae. It is time to give a complete link tabular between the twelve conditions

$$C^1_p, C^2_p, C^3_p, C^4_p, C^1(M), C^2(M), C^3(M), C^4(M), \mathscr{C}^1(\mathscr{M}), \mathscr{C}^2(\mathscr{M}), \mathscr{C}^3(\mathscr{M}), \mathscr{C}^4(\mathscr{M}).$$

Return to definitions. Here, $p\in M$ is a fixed chosen point, the origin in previous coordinates. The point p is chosen arbitrarily and is fixed. C^j_p denotes: $C^4_p : \dim_{f(p)}\mathbb{M}'_{p,\bar{p}} = 0$, $C^3_p : \dim_{f(p)}\mathbb{X}'_{p,\bar{p}} = 0$, $C^2_p : \dim_{f(p)}\mathbb{Z}'_{p,\bar{p}} = 0$, $C^1_p : \dim_{f(p)}\mathbb{V}'_p = 0$. Henceforth, $C^j(M)$ does not denote "$C^j_q\ \forall\, q\in M$, but $\forall\, q\in D_M$", *i.e.* over a dense open subset D_M of M. *Idem* for $\mathscr{C}^j(\mathscr{M})$. Consequently, the implication $C^j(M)\Rightarrow C^j_p$ is *a priori* untrue, since p can well belong to the set of points q where C^j_q is not satisfied.

First, we already know that if $C^j(M)$ is satisfied over an open dense subset of M, then $\mathscr{C}^j(\mathscr{M})$ is satisfied over an open dense subset of $\mathscr{M}$, for $j = 1,2,3,4$, and conversely. We know this thanks to Propositions 1.15, 1.23 and 1.41. Therefore, if C_p denotes $(C^j_p)_{1\le j\le 4}$, $C(M) = (C^j(M))_{1\le j\le 4}$, $\mathscr{C}(\mathscr{M}) = (\mathscr{C}^j(\mathscr{M}))_{1\le j\le 4}$, the comparison of our twelve conditions which could have been explored in a 12×12 tabular with 144 entries can be reduced to only three 4×4 tabulars:

$***$	C_p	$C(M)$	$\mathscr{C}(\mathscr{M})$
C_p	$\times$	$\times$	$\times$
$C(M)$	$\times$	$\times$	$\times$
$\mathscr{C}(\mathscr{M})$	$\times$	$\times$	$\times$

$\cong$

$*$	C_p
C_p	$\times$

$*$	$C(M)$
C_p	$\times$

$*$	$\mathscr{C}(\mathscr{M})$
$\mathscr{C}(\mathscr{M})$	$\times$

$***$	C^1_p	C^2_p	C^3_p	C^4_p
C^1_p	$\Leftarrow\ \Rightarrow$	$\not\Leftarrow\ \Rightarrow$	$\not\Leftarrow\Rightarrow$	$\not\Leftarrow\ \Rightarrow$
C^2_p	$\Leftarrow\ \not\Rightarrow$	$\Leftarrow\ \Rightarrow$	$\not\Leftarrow\ \not\Rightarrow$	$\not\Leftarrow\ \Rightarrow$
C^3_p	$\Leftarrow\ \not\Rightarrow$	$\not\Leftarrow\ \not\Rightarrow$	$\Leftarrow\ \Rightarrow$	$\not\Leftarrow\ \Rightarrow$
C^4_p	$\Leftarrow\ \not\Rightarrow$	$\Leftarrow\ \not\Rightarrow$	$\Leftarrow\ \not\Rightarrow$	$\Leftarrow\ \Rightarrow$

$***$	$C^1(M)$	$C^2(M)$	$C^3(M)$	$C^4(M)$
C^1_p	$\not\Leftarrow\ \Rightarrow$	$\not\Leftarrow\ \Rightarrow$	$\not\Leftarrow\ \Rightarrow$	$\not\Leftarrow\ \Rightarrow$
C^2_p	$\not\Leftarrow\ \not\Rightarrow$	$\not\Leftarrow\ \not\Rightarrow^1$	$\not\Leftarrow\ \not\Rightarrow^1$	$\not\Leftarrow\not\Rightarrow^1$
C^3_p	$\not\Leftarrow\ \not\Rightarrow$	$\not\Leftarrow\ \not\Rightarrow^1$	$\not\Leftarrow\ \not\Rightarrow^1$	$\not\Leftarrow\ \not\Rightarrow^2$
C^4_p	$\not\Leftarrow\ \not\Rightarrow$	$\not\Leftarrow\ \not\Rightarrow^1$	$\not\Leftarrow\ \not\Rightarrow^1$	$\not\Leftarrow\ \not\Rightarrow^1$

$***$	$\mathscr{C}^1(\mathscr{M})$	$\mathscr{C}^2(\mathscr{M})$	$\mathscr{C}^3(\mathscr{M})$	$\mathscr{C}^4(\mathscr{M})$
$\mathscr{C}^1(\mathscr{M})$	$\Leftarrow\ \Rightarrow$	$\not\Leftarrow$ [2] $\Rightarrow$	$\not\Leftarrow$ [2] $\Rightarrow$	$\not\Leftarrow$ [2] $\Rightarrow$
$\mathscr{C}^2(\mathscr{M})$	$\Leftarrow\ \not\Rightarrow$ [2]	$\Leftarrow\ \Rightarrow$	$\not\Leftarrow$ [3] $\not\Rightarrow$ [4]	$\not\Leftarrow$ [3] $\Rightarrow$
$\mathscr{C}^3(\mathscr{M})$	$\Leftarrow\ \not\Rightarrow$ [2]	$\not\Leftarrow$ [4] $\not\Rightarrow$ [3]	$\Leftarrow\ \Rightarrow$	$\not\Leftarrow$ [4] $\Rightarrow$
$\mathscr{C}^4(\mathscr{M}))$	$\Leftarrow\ \not\Rightarrow$ [2]	$\Leftarrow\ \not\Rightarrow$ [3]	$\Leftarrow\ \not\Rightarrow$ [4]	$\Leftarrow\ \Rightarrow$

Our examples are intended to explain only the main nontrivial (non) implication links above. Those not in the articles are easier to find.

1.65. Nonanalytic behavior of $(z,\bar{w}) \mapsto \mathbb{X}'_{z,\bar{w}}$**.** We give two examples of it.

Example 1.66. There exist f, M, M' with f nonalgebraic such that the function $\mathscr{M} \ni (z,\bar{w}) \mapsto \dim_{f(z)}\mathbb{X}'_{z,\bar{w}} \in \mathbb{N}$ is not upper semi-continuous at 0. Explicitely, take $M : z_4 = \bar{z}_4 + iz_1\bar{z}_1$ in $\mathbb{C}^2_{(z_1,z_4)}$,

$$M' : \quad z'_4 = \bar{z}'_4 + iz'_1\bar{z}'_1 + iz'_3\bar{z}'_2 + i\bar{z}'_3z'_2 + i{z'}^2_1\bar{z}'_3\bar{z}'_2 + i\bar{z}'^2_1z'_3z'_2, \tag{1.67}$$

and $f(z_1,z_4) = (z_1, z_4\sin^3 z_1, 0, z_4)$. Here, $\dim_0\mathbb{X}'_{0,0} = 0$, $\dim_{f(z)}\mathbb{X}'_{z,\bar{w}} = 1$ $\forall\, z \neq 0$, $z \in Q_{\bar{w}}$. (*Idem* for $\mathbb{M}'_{z,\bar{w}}$ instead.) See Section 4. This example therefore shows that $\mathbb{X}'_{z,\bar{w}}$ cannot be written as $\{z' : \lambda(z,\bar{w},z') = 0\}$ for holomorphic $\lambda \in \mathscr{V}_{\mathbb{C}^n}(0) \times \mathscr{V}_{\mathbb{C}^n}(0) \times \mathscr{V}_{\mathbb{C}^{n'}}(0)$ in general.

Example 1.68. (*See* Section 4.) There exist f, M, M' all algebraic such that if Σ denotes the set of points $(z,\bar{w},z_1) \in \mathscr{M}\sharp\mathscr{M}$ in a neighborhood of which $(*)$ of Proposition 1.23 is not satisfied, then Σ is not a complex analytic subset of $\mathscr{M}\sharp\mathscr{M}$ but a real analytic subset.

1.69. Globalization of $r_{M'}$**,** $r^2_{M'}$**.** First, we notice that $r_{M'}(E')(= r^{U'}_{M'}(E'))$ which we have localized in U' could have been defined globally as follows:

$$r^{\mathbb{C}^{n'}}_{M'}(E') = \{w' \in \mathbb{C}^{n'} : Q'_{\bar{w}'} \supset E'\}, \tag{1.70}$$

because the $\rho'_{j'}$ are polynomials. A variation of Theorem 1.9 would be:

Theorem 1.71. *If* $\dim_{f(z)}[r^{\mathbb{C}^{n'}}_{M'}(f(Q_{\bar{z}})) \cap (r^{\mathbb{C}^{n'}}_{M'})^2(f(Q_{\bar{w}}))] = 0$, $\forall\, z,w \in \mathscr{V}_{\mathbb{C}^n}(0)$, $z \in Q_{\bar{w}}$, *then* f *is algebraic.*

(Identical proof). Suprisingly, Theorem 1.71 can be more general than Theorem 1.9 because:

Example 1.72. There exist f, M, M', U, U' such that:

1. $\dim_{f(z)}[r^{U'}_{M'}(f(Q_{\bar{z}})) \cap (r^{U'}_{M'})^2(f(Q_{\bar{w}}))] \geq 1$, $\forall\, z,w \in U$, $z \in Q_{\bar{w}}$ and

2. $\dim_{f(z)}[r^{\mathbb{C}^{n'}}_{M'}(f(Q_{\bar{z}})) \cap (r^{\mathbb{C}^{n'}}_{M'})^2(f(Q_{\bar{w}}))] = 0$, $\forall\, z,w \in U$, $z \in Q_{\bar{w}}$.

---

[1] Example 1.66 shows everything: $C^j_p \not\Rightarrow C^j$, $2 \leq j \leq 4$.

[2] Example 1.36 shows everything: $\mathscr{C}^j(\mathscr{M}) \not\Rightarrow \mathscr{C}^1(\mathscr{M})$, $2 \leq j \leq 4$.

[3] Example 1.53.

[4] Example 1.56.

Explicitely (*see* Section 4), take $U = \Delta^2$, $U' = \Delta^4$, the hypersurface $M : z_4 = \bar{z}_4 + iz_1\bar{z}_1$, $f(z_1, z_4) = (z_1, 0, 0, z_4) \in \mathbb{C}^4$, and

(1.73)
$$M' : z'_4 = \bar{z}'_4 + iz'_1\bar{z}'_1 + iz'^2_1(1+\bar{z}'_3)\bar{z}'_3 + i\bar{z}'^2_1(1+z'_3)z'_3 + iz'_2z'_3\bar{z}'^2_2 + i\bar{z}'_2\bar{z}'_3z'^2_2.$$

Conversely, Theorem 1.9 can be more general than Theorem 1.71 (exercise left to the reader).

1.74. About $\mathbb{Z}'_{z,\bar{w}}$, $\mathbb{M}'_{z,\bar{w}}$. It is not difficult to see that all the three positive Theorems 1.9, 1.11 and 1.71 concerning $\mathbb{X}'_{z,\bar{w}}$ extend immediately to be satisfied by $\mathbb{Z}'_{z,\bar{w}}$ and by $\mathbb{M}'_{z,\bar{w}}$, once we have established the following result analogous to Proposition 1.23:

Proposition 1.75. *There exists a standard constructive way of finding a variety $\widetilde{\S}^1 = \{(z, \bar{w}, z') : \tilde{r}(z, \bar{w}, z') = 0\}$ contained in $\S^1$ with $\tilde{r}_j(z, \bar{w}, z') \in \mathscr{A}_n(U) \times \overline{\mathscr{O}}_n(U) \times \mathscr{A}_{n'}(U')$, $1 \leq j \leq \widetilde{J}$, $\widetilde{J} \geq J$, such that*

$$\Gamma r(f) = \{(z, \bar{w}, f(z)) : (z, \bar{w}) \in \mathscr{M}\} \subset \widetilde{\S}^1_{\mathscr{M}}, \tag{1.76}$$

$$\widetilde{\S}^1_{\mathscr{M}} = \{(z, \bar{w}, z') : \tilde{r}(z, \bar{w}, z') = 0, (z, \bar{w}) \in \mathscr{M}\}$$

and such that there exist a Zariski open subset $\mathscr{D}_{\mathscr{M}} := \mathscr{M} \backslash \mathscr{N}$ of $\mathscr{M}$, $\mathscr{N} \subset \mathscr{M}$ complex analytic, $\dim_{\mathbb{C}} \mathscr{N} \leq 2m+d-1$, and an integer n'_1, $0 \leq n'_1 \leq n'$ such that

$(*)$ $\forall\, p \in \mathscr{D}_{\mathscr{M}}$, $\exists\, \mathscr{U}_p = \mathscr{V}_{\mathscr{M}}(p)$, $\exists\, U'_{p'} = \mathscr{V}_{\mathbb{C}^{n'}}(p' = f(p))$, such that $\widetilde{\S}^1_{\mathscr{U}_p} := (\mathscr{U}_p \times U'_{p'}) \cap \widetilde{\S}^1$ is smooth and the projection $\pi' : \widetilde{\S}^1_{\mathscr{U}_p} \to U'$ is of constant rank n'_1.

Consequently, $(*)$ implies that

$(**)$ $\forall\, p \in D_M := \mathscr{D}_{\mathscr{M}} \cap M$, $\exists\, U_p = \mathscr{V}_{\mathbb{C}^n}(p)$, $\exists\, U'_{p'} = \mathscr{V}_{\mathbb{C}^{n'}}(p' = f(p))$, $\exists\, K \in \mathbb{N}_*$, $\exists\, (s_k)_{1 \leq k \leq K}$, $s_k \in \overline{\mathscr{O}}_n(U_p) \times \mathscr{O}_n(U_p) \times \mathscr{A}_{n'}(U'_{p'})$ such that $\forall\, z_1 \in Q_{\bar{w}}$ if $\mathbb{W}'_{w,\bar{z}_1} := \widetilde{\S}^1_{w,\bar{z}_1} \cap (U_p \times \overline{U}_p \times U'_{p'})$ for any $(w, \bar{z}_1) \in \mathscr{M}$, and if $r^{U'_{p'}}_{M'}(E') := \{w' \in U'_{p'} : Q'_{\bar{w}'} \supset E'\}$, then

$$r^{U'_{p'}}_{M'}(\mathbb{W}_{w,\bar{z}_1}) = \{(\bar{w}, z_1, z') \in \overline{U}_p \times U_p \times U'_{p'} : s(\bar{w}, z_1, z') = 0\} \tag{1.77}$$

Proposition 1.75 shows that after shrinking the first reflection variety $\S^1$ to $\widetilde{\S}^1$, the crucial property $(*)$ above is satified. This property is appropriate to compute the second reflection $r_{M'}(\mathbb{W}'_{w,\bar{z}_1})$ *after localisation* in a smaller open subset $U'_{p'}$ because it yields the convenient analytic dependence with respect to the parameters $(w, \bar{z}_1)$, as we have written in (1.77). We would like to remind the reader that our examples show that there is a serious difference between Proposition 1.23 and Proposition 1.75 and a serious difference between applying operators $r^{U'_{p'}}_{M'}$ or $r^{U'}_{M'}$ or $r^{\mathbb{C}^{n'}}_{M'}$. Finally, by applying Proposition 1.75, we clearly obtain the Theorems 1.9 and 1.11 with $\mathbb{Z}'_{z,\bar{w}}$ and with $\mathbb{M}'_{z,\bar{w}}$ instead of $\mathbb{X}'_{z,\bar{w}}$. The remainder of the paper is devoted to explore the technicalities.

2. Proof of Theorem 1.9

Lemma 2.1. *(i) For any set $E \subset U$, $E \cap r_M(E) \subset M$ and $E \subset r_M(r_M(E))$.*

(ii) $z \in Q_{\bar{w}}$ iff $w \in Q_{\bar{z}}$, $z \in Q_{\bar{z}}$ iff $z \in M$, $\{w \in U : Q_{\bar{w}} \supset E\} = \cap_{w \in E} Q_{\bar{w}}$.

(iii) $f(Q_{\bar{z}}) \subset Q'_{\overline{f(z)}}$.

(iv) $\rho(z, \bar{w}) = 0$ iff $\rho(w, \bar{z}) = 0$.

Proof. (ii), (iii) and (iv) are classical. Prove (i). If $e \in E$ and $e \in r_M(E) = \cap_{w \in E} Q_{\bar{w}}$ then $e \in Q_{\bar{e}}$, so $e \in M$ by (ii), *i.e.* $E \cap r_M(E) \subset M$. Furthermore, by construction of $r_M(E)$,

$$r_M(r_M(E)) = \cap\{Q_{\bar{z}} : z \in r_M(E)\} = \cap\{Q_{\bar{z}} : Q_{\bar{z}} \supset E\} \supset E. \qquad \square \tag{2.2}$$

Let $\mathscr{M} = \{(z, \bar{w}) \in U \times U : \rho(z, \bar{w}) = 0\}$. Let $\underline{\mathscr{L}}_l = \sum_{j=1}^n a_{j,l}(z, \bar{w}) \frac{\partial}{\partial \bar{w}_j}$, $1 \le l \le m$, be tangent vectors to $\mathscr{M}$ which are the complexifications of a basis of tangent vectors $\overline{L}_l = \sum_{j=1}^n a_{j,l}(z, \bar{z}) \frac{\partial}{\partial \bar{z}_j}$, $1 \le l \le m$ generating $T^{0,1}M$ with polynomial coefficients and which commute.

Lemma 2.3. *There exist $J \in \mathbb{N}_*$ and functions $r_j(z, \bar{w}, z') \in \mathscr{A}_n \times \overline{\mathscr{O}}_n \times \mathscr{A}_{n'}$, $1 \le j \le J$, such that $\forall\, (z, \bar{w}) \in \mathscr{M}$*

$$r_{M'}(f(Q_{\bar{z}})) = \{z' \in U' : r_j(z, \bar{w}, z') = 0, 1 \le j \le J\}. \tag{2.4}$$

Remark. Two sets $\{r_j(z, \bar{w}_1, z') = 0\}$ and $\{r_j(z, \bar{w}_2, z') = 0\}$ for different w_1, w_2 such that $z \in Q_{\bar{w}_1}$, $z \in Q_{\bar{w}_2}$, coincide and are equal to $r_{M'}(f(Q_{\bar{z}}))$.

Proof. By definition, $r_{M'}(f(Q_{\bar{z}})) = \{w' \in U' : \rho'(f(w), \bar{w}') = 0, \forall\, w \in Q_{\bar{z}}\}$. Using Lemma 2.1 (iv), $r_{M'}(f(Q_{\bar{z}})) = \{z' \in U' : \rho'(z', \bar{f}(\bar{w})) = 0, \forall\, w \in Q_{\bar{z}}\}$. Equivalently, $Q_{\bar{z}} \ni w \mapsto \rho'(z', \bar{f}(\bar{w})) \in \mathbb{C}^{d'}$ vanishes identically as an antiholomorphic map of w defined on the complex algebraic manifold $Q_{\bar{z}}$. Thanks to the identity principle, this is equivalent to $\underline{\mathscr{L}}^\gamma(\rho'(z', \bar{f}(\bar{w}))) = 0$, $\forall\, \gamma \in \mathbb{N}^m$. Put $r_\gamma(z, \bar{w}, z') := \underline{\mathscr{L}}^\gamma(\rho'(z', \bar{f}(\bar{w})))$. Then $r_\gamma \in \mathscr{A}_n \times \overline{\mathscr{O}}_n \times \mathscr{A}'_{n'}$. By noetherianity, a finite subcollection of the r_γ's defines $r_{M'}(f(Q_{\bar{z}}))$. $\square$

Lemma 2.5. *There exist $K \in \mathbb{N}_*$ and polynomials $s_k(z')$ (depending on $\bar{w}$), $1 \le k \le K$, such that $r^2_{M'}(f(Q_{\bar{w}})) = \{z' \in U' : s_k(z') = 0, 1 \le k \le K\}$.*

Proof. Simply because $r^2_{M'}(f(Q_{\bar{w}}))$ is algebraic, by the definition (1.3). $\square$

End of proof of Theorem 1.9. Fix $\bar{w}$. We prove that $f|_{Q_{\bar{w}} \cap V}$ is algebraic. Indeed

1. $\forall\, z \in Q_{\bar{w}}$, $r_j(z, \bar{w}, f(z)) \equiv 0$, $1 \le j \le J$ and $s_k(f(z)) \equiv 0$, $1 \le k \le K$.

2. The set $\Phi := \{z' : r_j(z, \bar{w}, z') = 0, 1 \le j \le J$ and $s_k(z') = 0, 1 \le k \le K\}$ is zero dimensional at each point $f(z)$, $z \in V$, $z \in Q_{\bar{w}}$.

By Theorem 5.3.9 in [4] (in the algebraic case), there exist Weierstrass polynomials $P_j(z, z'_j) = {z'_j}^{N_j} + \sum_{1 \le k \le N_j} A_{k,j}(z) {z'_j}^{N_j - k}$, $A_{k,j} \in \mathbb{C}[z]$, $1 \le$

$j \leq n'$, such that Φ is contained in $\Psi = \{(z, z') \in V \times V' : P_j(z, z'_j) = 0, 1 \leq j \leq n'\}$. As $(z, f(z)) \in \Phi$, we obtain that

$$f_j(z)^{N_j} + \sum_{1 \leq k \leq N_j} A_{k,j}(z) f_j^{N_j - k}(z) \equiv 0, \quad z \in Q_{\bar{w}} \cap V,\ 1 \leq j \leq n'. \tag{2.6}$$

Equation (2.6) above yields at once that each map $Q_{\bar{w}} \cap V \ni z \mapsto f_j(z) \in \mathbb{C}$ is holomorphic *algebraic*, $1 \leq j \leq n'$. To conclude, apply Theorem 1.10. $\square$

3. Proof of Proposition 1.23

Proposition 1.23 relies upon the following statement (denseness of D_M is then clear and $(*) \Rightarrow (**)$ also):

Proposition 3.1. *If* $\dim_{f(z)} \mathbb{X}'_{z,\bar{z}} = 0$, $\forall\, z \in M \cap \mathscr{V}_{\mathbb{C}^n}(0) =: M \cap V$, *then there exists* $p \in M \cap V$ *arbitrarily close to* 0 *such that* $\dim_{f(z)} \mathbb{X}'_{z,\bar{w}} = 0$, $\forall\, z, w \in \mathscr{V}_{\mathbb{C}^n}(p)$, $z \in Q_{\bar{w}}$ *and* $(*)$ *of Proposition 1.23 holds in* $U_p = \mathscr{V}_{\mathbb{C}^n}(p) \subset V$.

As we have already observed, the main difficulty here is that there does not necessarily exist holomorphic equations $\lambda(z, \bar{w}, z')$ such that $\mathbb{X}'_{z,\bar{w}} = \{z' \in U' : \lambda(z, \bar{w}, z') = 0\}$ as for example like there existed some for $r_{M'}(f(Q_{\bar{z}})) = \{z' \in U' : r(z, \bar{z}, z') = 0\}$, $z \in M$, $z \in Q_{\bar{z}}$. To get such a local parametrized family, we shall have to shift $p \in M$ from a certain number of images by holomorphic maps of complex analytic sets. Our proof shows that the set of $p \in M$ in a neighborhood of which $\mathbb{X}'_{z,\bar{w}}$ should be holomorphically parametrized is a dense open subset of M. It will also clearly show that the bad set can be at least as worst as a subanalytic set.

We will prove Proposition 3.1 with M, M' of class $\mathscr{C}^\omega$. For that purpose, let $\mathbb{V}'_z := r_{M'}(f(Q_{\bar{z}})) = \{z' \in U' : r(z, \bar{w}, z') = 0\}$ (in vectorial notations, $r = (r_1, \ldots, r_J)$) so that $r^2_{M'}(f(Q_{\bar{w}})) = r_{M'}(\mathbb{V}'_w)$. Let us recall that the representation of $\mathbb{V}'_z$ by holomorphic equations $r(z, \bar{w}, z') = 0$ gives the same set $\mathbb{V}'_z$ for any choice of $(z, \bar{w}) \in \mathscr{M}$ (*cf.* Lemma 2.3). Therefore the introduction of a third point $z_1 \in Q_{\bar{w}}$ yields a representation $\mathbb{V}'_w = \{z' \in U' : r(w, \bar{z}_1, z') = 0\}$.

From now on, we let $z, w, z_1 \in U$, $z \in Q_{\bar{w}}$, $w \in Q_{\bar{z}_1}$, and we denote $\S^1_{z,\bar{w}}$, $\S^1_{w,\bar{z}_1}$ instead of $\mathbb{V}'_z$, $\mathbb{V}'_w$. This is justified by the fact that although the set $\{z' \in U' : r(z, \bar{w}, z') = 0\}$ does not depend on $\bar{w}$, the *equations* $r_\gamma(z, \bar{w}, z') = \underline{\mathscr{L}}^\gamma[\rho'(z', \bar{f}(\bar{w}))] = 0$ *do really depend* on $\bar{w}$. (Inspect for instance the identity map $\mathbb{C}^2 \to \mathbb{C}^2$, $M \to M$, $M = \{z_2 = \bar{z}_2 + i z_1 \bar{z}_1\}$.) The notation $\S^1_{z,\bar{w}}$ simply means a fiber over $(z, \bar{w})$ of the set $\S^1$ (even if $(z, \bar{w}) \notin \mathscr{M}$). We then write

$$r_{M'}(\S^1_{w,\bar{z}}) = \{z' \in U' : \rho'(z', \overline{\zeta}') = 0\ \forall\, \zeta' \text{ satisfying } r(w, \bar{z}_1, \zeta') = 0\}. \tag{3.2}$$

We shall establish that there exist points $p = (z_p, \bar{z}_p) \in M$ arbitrarily close to 0, neighborhoods $U_p = \mathscr{V}_{\mathbb{C}^n}(p)$, $U'_{p'} = \mathscr{V}_{\mathbb{C}^{n'}}(p' = f(p))$ and holomorphic functions $s(\bar{w}, z_1, z')$ near $(z_p, \bar{z}_p, f(z_p))$ in $U_p \times \overline{U}_p \times U'_{p'}$ such that:

1. $r_{M'}(\S^1_{w,\bar z_1}) \subset \{z' \in U'_{p'} : s(\bar w, z_1, z') = 0\}$, $\forall\, w, z_1 \in U_p$, $w \in Q_{\bar z_1}$, and:

2. $r_{M'}(\S^1_{w,\bar w}) = \{z' \in U'_{p'} : s(\bar w, w, z') = 0\}$, $\forall\, w \in U_p \cap M$.

Lemma 3.3. *If the above conditions* **1-2** *are fulfilled, then* $\dim_{f(z)} \mathbb{X}'_{z,\bar w} = 0$, $\forall\,(z, \bar w) \in \mathscr{V}_{\mathscr{M}}(p)$, *if* $\dim_{f(p)} \mathbb{X}'_{p,\bar p} = 0$.

Proof. Indeed, let $\mathbb{Y}'_{z,\bar w,z_1} = \{z' \in U' : r(z, \bar w, z') = 0, s(\bar w, z_1, z') = 0\} \supset \mathbb{X}'_{z,\bar w} \ni f(z)$. By assumption, $\dim_{f(p)} \mathbb{Y}'_{p,\bar p,p} = 0$. Since $\mathbb{Y}'_{z,\bar w,z_1}$ is holomorphically parametrized, then $\dim_{f(z)} \mathbb{Y}'_{z,\bar w,z_1} = 0$, $\forall\, z, w, \bar z_1$ in some small neighborhood of p in $\mathbb{C}^n$ with $z \in Q_{\bar w}$, $w \in Q_{\bar z_1}$. Therefore $\dim_{f(z)} \mathbb{X}'_{z,\bar w} = 0$ also. $\square$

Let us assume for a while that we have obtained a dense open set D_M where the above conditions **1** and **2** are fulfilled. To complete $(*)$ of Proposition 1.23, it suffices to take $\S^2 :=$ the irreducible component of $\mathbb{Y}' = \{(z, \bar w, z_1, z') \in ((\mathscr{M} \sharp \mathscr{M}) \cap (U_p \times \overline{U}_p \times U_p)) \times U'_{p'} : r(z, \bar w, z') = 0, s(\bar w, z_1, z') = 0\}$ containing the graph of f over $(\mathscr{M} \sharp \mathscr{M}) \cap (U_p \times \overline{U}_p \times U_p)$. $\S^2$ is defined by similar partially polynomial equations $r \in \mathscr{A}_n(U_p) \times \overline{\mathscr{O}}(U_p) \times \mathscr{A}_{n'}(U'_{p'})$, $s \in \overline{\mathscr{O}}_n(U_p) \times \mathscr{O}_n(U_p) \times \mathscr{A}_{n'}(U'_{p'})$. The graph of f is in fact a local irreducible component of $\S^2$, for reasons of dimension. Therefore, $\S^2$ is smooth there and (if the equations $r = s = 0$ are reduced) the rank of the mapping (1.26) equals n' almost everywhere, which completes the proof of Proposition 1.23. $\square$

Consequently, it remains to establish **1** and **2** above. In fact, this can be reduced to a statement which we now formalize in an independent fashion, abandoning Segre varieties, *see* Lemma 3.7. Let Δ be the unit disc in $\mathbb{C}$. Let $\kappa \in \mathbb{N}_*$, $n \in \mathbb{N}_*$, $\nu_1 \in \mathbb{N}_*$, $g : \Delta^\kappa \times \Delta^n \to \mathbb{C}^{\nu_1}$ be a holomorphic power series mapping converging normally in $(2\Delta)^{\kappa+n}$, $(t, z) \mapsto g(t, z)$, let

$$F := \{(t, z) \in \Delta^\kappa \times \Delta^n : g(t, z) = 0\}. \tag{3.4}$$

Assume that there exists a holomorphic map $\lambda : \Delta^\kappa \to \Delta^n$ converging normally in $(2\Delta)^\kappa$ such that $(t, \lambda(t)) \in F$, $\forall\, t \in \Delta^\kappa$, hence $\pi(F) = \Delta^\kappa$, where $\pi : \Delta^\kappa \times \Delta^n \to \Delta^\kappa$, $(t, z) \mapsto t$. Let $n' \in \mathbb{N}_*$, $\nu_2 \in \mathbb{N}_*$, let $\rho : \Delta^{n'} \times \Delta^n \to \mathbb{C}^{\nu_2}$ be a holomorphic series converging normally in $(2\Delta)^{n'+n}$ and denote for $t \in \Delta^\kappa$

$$G_F[t] := \{z' \in \Delta^{n'} : \rho(z', z) = 0,\ \forall\, z \ \ s.t.\ \ g(t, z) = 0\}. \tag{3.5}$$

Let $I^\kappa \subset \Delta^\kappa$ be the maximally real set $I^\kappa = (-1, 1)^\kappa$, $I = (-1, 1)$. Introduce the complex filtration $F = F_1 \supset F_2 \supset F_3 \supset \cdots \supset F_{a+1} = \emptyset$, $F_a \neq \emptyset$, $a \geq 1$, of F by singular subspaces: $F_{i+1} = F_{i,sing}$. Assume also that:

$$F_\alpha = \{(t, z) \in \Delta^\kappa \times \Delta^n : g_\alpha(t, z) = 0\}, \qquad 1 \leq \alpha \leq a, \tag{3.6}$$

with $g_\alpha : (2\Delta)^{\kappa+n} \to \mathbb{C}^{\nu_{1\alpha}}$ converging normally and assume that all irreducible components of F_α are defined analogously. We denote by $\Delta_\kappa(\underline{t}, \underline{\varepsilon})$, $\underline{\varepsilon} > 0$, the polydisc of center $\underline{t}$, radius $\underline{\varepsilon}$, with $\underline{t} \in \Delta^\kappa$, $\underline{\varepsilon} << \mathrm{dist}(\underline{t}, b\Delta^\kappa)$. It remains to establish:

Lemma 3.7. *There exist* $\underline{t} \in I^\kappa$, $\underline{\varepsilon} > 0$ *and holomorphic equations* $s(t, z')$ *in* $\Delta_\kappa(\underline{t}, \underline{\varepsilon}) \times \Delta^{n'}$ *such that:*

1. $G_F[t] \subset \{z' \in \Delta^{n'} : s(t, z') = 0\}, \quad \forall\, t \in \Delta_\kappa(\underline{t}, \underline{\varepsilon})$, *and:*

2. $G_F[t] = \{z' \in \Delta^{n'} : s(t, z') = 0\}, \quad \forall\, t \in \Delta_\kappa(\underline{t}, \underline{\varepsilon}) \cap I^\kappa$.

Proof. First, $G_F[t] = G_{F_{1,reg}}[t] \cap G_{F_{2,reg}}[t] \cap \cdots \cap G_{F_{a,reg}}[t]$ $(F_a = F_{a,reg})$. Also, $\forall\, \alpha$, $1 \le \alpha \le a$, $G_F[t] = G_{F_{1,reg}}[t] \cap \cdots \cap G_{F_{\alpha-1,reg}}[t] \cap G_{F_\alpha}[t]$. Let $F_\alpha = \cup_{\beta=1}^{b_\alpha} F_{\alpha\beta}$, $b_\alpha \in \mathbb{N}_*$, denote the decomposition of F_α into irreducible components. Then also:

$$G_F[t] = \bigcap_{1 \le \alpha \le a, 1 \le \beta \le b_\alpha} G_{F_{\alpha\beta}}[t]. \tag{3.8}$$

We have (see [C], Chapter 1):

$F_{\alpha\beta,reg} \backslash (\cup_{\gamma \ne \beta} F_{\alpha\gamma}) \subset F_{\alpha,reg}$,

$F_{\alpha\beta,reg} \cap (\cup_{\gamma \ne \beta} F_{\alpha\gamma})$ is a proper analytic subset of $F_{\alpha\beta,reg}$,

$F_{\alpha,reg} = \cup_{1 \le \beta \le b_\alpha} (F_{\alpha\beta,reg} \backslash (\cup_{\gamma \ne \beta} F_{\alpha\gamma}))$ and

$G_{F_{\alpha,reg}}[t] \cap G_{F_{\alpha+1}}[t] \subset \cap_{1 \le \beta \le b_\alpha} G_{F_{\alpha\beta,reg}}[t]$.

This yields

$$G_F[t] = \bigcap_{1 \le \alpha \le a, 1 \le \beta \le b_\alpha} G_{F_{\alpha\beta,reg}}[t]. \tag{3.9}$$

Denote now by $F_1, \ldots, F_c$, $c = b_1 + \cdots + b_a \in \mathbb{N}_*$ the $F_{\alpha\beta}$'s which are irreducible. So $G_F[t] = \cap_{1 \le \gamma \le c} G_{F_{\gamma,reg}}[t]$. Let F be one of the F_γ's, $1 \le \gamma \le c$. Now, we come to a dichotomy. Either the generic rank satisfies

$$\text{gen rk}_{\mathbb{C}}(\pi|_{F_{reg}}) = \kappa \quad \text{or} \quad \text{gen rk}_{\mathbb{C}}(\pi|_{F_{reg}}) < \kappa. \tag{3.10}$$

Lemma 3.11. *Let* $F :=$ *one of the* F_γ*'s. If* $\text{gen rk}_{\mathbb{C}}(\pi|_{F_{reg}}) < \kappa$, *then the* closed *set* $\overline{\pi}(F) := \pi(\overline{F} \subset \overline{\Delta}^\kappa \times \overline{\Delta}^n) \subset \overline{\Delta}^\kappa$ *(here,* $\bar{\cdot}$ *denotes closure) is contained in a countable union* $\cup_{\nu \in \mathbb{N}_*} A_\nu$ *of analytic sets* $A_\nu \cong \Delta^{\lambda_\nu}$ *with* $0 \le \lambda_\nu < \kappa$, $\nu \in \mathbb{N}_*$.

Proof. Let F be a F_γ with $\text{gen rk}_{\mathbb{C}}(\pi|_{F_{reg}}) < \kappa$. Since F is defined over $(2\Delta)^{\kappa+n}$ and irreducible, paragraph 3.8 in [C] applies. □

Hence the Lebesgue measure $\lambda_{2\kappa}(\overline{\pi}(F)) = 0$. Furthermore, $\forall\, \nu$, $\lambda_\kappa(\overline{I}^\kappa \cap A_\nu) = 0$, since I^κ is maximally real. Hence $\lambda_\kappa(\overline{\pi}(F) \cap I^\kappa) = 0$. Thus there exists an open dense subset B_F of I^κ such that for all $\underline{t} \in B_F$, there exists an open neighborhood $\mathscr{V}_{\Delta^\kappa}(\underline{t})$ with $\mathscr{V}_{\Delta^\kappa}(\underline{t}) \cap \overline{\pi}(F) = \emptyset$. *Consequently, all irreducible components* F_γ *such that* $\text{gen rk}_{\mathbb{C}}(\pi|_{F_{\gamma,reg}}) < \kappa$ *can be forgotten.* Indeed, for almost all $t \in \Delta^\kappa$, $F_\gamma[t] = \emptyset$, so for such t, F_γ makes no contribution to the set $G_F[t]$ defined by intersecting the sets $\{\rho(z', z) = 0\}$ over those $z \in F_\gamma[t]$. But of course, since there exist $\lambda : \Delta^\kappa \to \Delta^n$ such that $(t, \lambda(t)) \in F = F_1 \cup \cdots \cup F_c$, $\forall\, t \in \Delta^\kappa$, there exists at least one γ such that $\text{gen rk}_{\mathbb{C}}(\pi|_{F_{\gamma,reg}}) = \kappa$. Let now Υ denote the dense open set of $t \in I^\kappa$ such that $F_\gamma[t] = \emptyset$ for the γ's with $\text{gen rk}_{\mathbb{C}}(\pi|_{F_{\gamma,reg}}) < \kappa$. We proceed with $\text{gen rk}_{\mathbb{C}}(\pi|_{F_{\gamma,reg}}) = \kappa$, $\forall\, \gamma = 1, \ldots, c$ after forgetting other component and renumbering the remaining ones. Fix $F :=$ a F_γ. Let $C :=$ critical locus

of $\pi|_{F_{reg}}$. Denote $\widetilde{F} := F_{reg}\backslash C$. It is known that C extends as a complex analytic subset of F itself and that $\mathrm{rk}_{\mathbb{C}}(\pi|_C) < \kappa$ ([C], *ibidem*). Again for an open dense set Υ of t (still denoted by Υ), we have $\overline{\pi}(C) \not\ni t$ (Lemma 3.11).

Let $A_F := \pi(\widetilde{F})$, $B_F := \pi(\widetilde{F}) \cap I^\kappa$. Clearly, A_F is a nonempty subdomain of Δ^κ (since $\widetilde{F}$ is connected).

If $B_F = \emptyset$, $\widetilde{F} \cap \pi^{-1}(t)$ makes no contribution to $G_{F_{reg}}[t]$, if $t \in I^\kappa$. We can forget those components F since according to the desired conditions 1-2 of Lemma 3.7, it is harmless to add equations to $G_{F_{reg}}[t]$ for some other $t \in A_F$ that are close to I^κ but do not belong to I^κ.

Assume therefore that $B_F \neq \emptyset$. Again, by $\pi(\Gamma r(\lambda)) = \Delta^\kappa$, there must exist at least one F such that $B_F \neq \emptyset$. Let $m_1 := \dim_{\mathbb{C}} F$. Choose $\underline{t} \in B_F \cap \Upsilon$, which is possible since B_F is open and Υ is dense open, choose $\underline{\varepsilon} > 0$ with $\Delta_\kappa(\underline{t}, \underline{\varepsilon}) \cap I^\kappa \subset\subset A_F \cap \Upsilon$. For all $t \in \Delta_\kappa(\underline{t}, \underline{\varepsilon})$, $(\pi|_{\widetilde{F}})^{-1}(t)$ consists of finitely many $(m_1 - \kappa)$-dimensional complex submanifolds of $\widetilde{F}$, since $\pi^{-1}(\underline{\Delta}_\kappa(\underline{t}, \underline{\varepsilon})) \cap C = \emptyset$, whence π has constant rank κ over $\tilde{F} \cap (\underline{\Delta}_\kappa(\underline{t}, \underline{\varepsilon}) \times \Delta^n)$ and since

$$(\pi|_{\widetilde{F}})^{-1}(t) \subset (\pi|_F)^{-1}(t) \tag{3.12}$$

and the latter has a finite number of connected components. This number can only increase locally as t moves. It is bounded on $\overline{\Delta}_\kappa(\underline{t}, \underline{\varepsilon}) \cap \overline{I}^\kappa$. Hence we can find a new $\underline{\underline{t}} \in I^\kappa \cap \Delta_\kappa(\underline{t}, \underline{\varepsilon})$ in a neighborhood of which this number of connected components is constant, say in $\Delta_\kappa(\underline{\underline{t}}, \underline{\underline{\varepsilon}}) \cap I^\kappa$. Denote again simply this polydisc by $\Delta_\kappa(\underline{t}, \underline{\varepsilon})$.

Recall also that $\pi(C) \cap \Delta_\kappa(\underline{t}, \underline{\varepsilon}) = \emptyset$, so $G_{F_{reg}}[t] = G_{\widetilde{F}}[t]$, $\forall\, t \in \Delta_\kappa(\underline{t}, \underline{\varepsilon})$.

Lemma 3.13. *Let $\underline{t} \in I^\kappa$ such that there exists $\underline{\varepsilon} > 0$ such that the number of connected components of $(\pi|_{\widetilde{F}})^{-1}(t)$ is constant equal to $\delta \in \mathbb{N}_*$ for all $t \in \Delta_\kappa(\underline{t}, \underline{\varepsilon}) \cap I^\kappa$ and with $\Delta_\kappa(\underline{t}, \underline{\varepsilon}) \cap I^\kappa \subset \Upsilon$.* Then there exist holomorphic equations $s(t, z')$ in $\Delta_\kappa(\underline{t}, \underline{\varepsilon}) \times \Delta^{n'}$ such that

1. $G_{F_{reg}}[t] = G_{\widetilde{F}}[t] \subset \{z' \in \Delta^{n'} : s(t, z') = 0\} \quad \forall\, t \in \Delta_\kappa(\underline{t}, \underline{\varepsilon})$.
2. $G_{F_{reg}}[t] = G_{\widetilde{F}}[t] = \{z' \in \Delta^{n'} : s(t, z') = 0\} \quad \forall\, t \in \Delta_\kappa(\underline{t}, \underline{\varepsilon}) \cap I^\kappa$.

Assume for a while that Lemma 3.13 is proved. Then Lemma 3.7 holds for one irreducible component F of the F_γ's. Pick a second component. Letting t vary now in $\Delta_\kappa(\underline{t}, \underline{\varepsilon})$ (instead of Δ^κ), we can repeat the above argument a finite number of steps and get Lemma 3.7 as desired. $\square$

For short, let us denote $\underline{\Delta}_\kappa := \Delta_\kappa(\underline{t}, \underline{\varepsilon})$.

Proof of Lemma 3.13. Let $D_1, \ldots, D_\delta$ be the components of $(\pi|_{\widetilde{F}})^{-1}(\underline{t})$. These are $(m_1 - \kappa)$-dimensional connected complex submanifolds of $\widetilde{F}$ (because $\pi : \widetilde{F} \to \Delta^\kappa$ is submersive). Let $p_1, \ldots, p_\delta \in D_1, \ldots, D_\delta$ be points, let $U_1, \ldots, U_\delta$ be neighborhoods of $p_1, \ldots, p_\delta$ in $\widetilde{F}$ with maps $\Phi_j : \underline{\Delta}^\kappa \times \Delta^{m_1 - \kappa} \to U_j$ such that $\Phi_j(0 \times \Delta^{m_1-\kappa}) = D_j \cap U_j$, $\Phi_j(q \times \Delta^{m_1-\kappa})$ is the fiber $\pi^{-1}(\pi(\Phi_j(q \times 0))) \subset \tilde{F}$, $\forall\, 1 \leq j \leq \delta$, $q \in \underline{\Delta}^\kappa$ and such that $\pi(\Phi_j(q \times \Delta^{m_1-\kappa})) = q$.

After all the above reductions and simplifications, we now can prove the main step in two lemmas:

Lemma 3.14. *1.* $G_{F_{reg}}[t] \subset G_{U_1}[t] \cap \cdots \cap G_{U_\delta}[t] \ \ \forall\, t \in \underline{\Delta}_\kappa$ *and*
2. $G_{F_{reg}}[t] = G_{U_1}[t] \cap \cdots \cap G_{U_\delta}[t] \ \ \forall\, t \in \underline{\Delta}_\kappa \cap I^\kappa$.

Lemma 3.15. *Each* $G_{U_j}[t]$ *is equal to a set* $\{z' \in U' : s_j(t, z') = 0\}$, *where* $s_j =$ *a finite set of holomorphic functions.*

Proof of Lemma 3.14. Let $D_1[t], \ldots, D_\delta[t]$ denote the connected components of $(\pi|_{\widetilde{F}})^{-1}(t)$, $t \in \underline{\Delta}_\kappa \cap I^\kappa$.

Then $D_j[t] \cap U_j = \Phi_j(t \times \Delta^{m_1-\kappa}) := U_j[t]$ and

$$G_{F_{reg}}[t] = G_{\widetilde{F}}[t] = G_{D_1[t]}[t] \cap \cdots \cap G_{D_\delta[t]}[t] \ \ \forall\, t \in \underline{\Delta}_\kappa \cap I^\kappa \tag{3.16}$$

Now, if $\rho(z', z) = 0 \ \forall\, z \in U_j[t]$, by the uniqueness principle, then $\rho(z', z) \equiv 0$ on the connected complex manifold $D_j[t]$, so $G_{\widetilde{F}}[t] = G_{U_1[t]}[t] \cap \cdots G_{U_\delta[t]}[t]$, $\forall\, t \in \underline{\Delta}_\kappa \cap I^\kappa$. If $t \in \underline{\Delta}_\kappa \backslash I^\kappa$, the cardinal of the set of connected components of $(\pi|_{\widetilde{F}})^{-1}$ can be $> \delta$, so $G_{\widetilde{F}}[t]$ diminishes, $G_{\widetilde{F}}[t] \subset G_{U_1[t]}[t] \cap \cdots \cap G_{U_\delta[t]}[t]$. $\square$

Proof of Lemma 3.15. Let $E_j := \Phi_j(\underline{\Delta}_\kappa \times 0)$ given by a holomorphic graph $z = \tilde{\omega}(t)$ over $\underline{\Delta}_\kappa$. Then E_j is a transverse manifold to the fibers of π. For each j, there exist vector fields $L_1^j, \ldots, L_{m_1-\kappa}^j$ over U_j with holomorphic coefficients in (t, z) commuting with each other with integral manifolds $\Phi_j(t \times \Delta^{m_1-\kappa})$. Then $\rho(z', z) = 0 \ \forall\, z \in (\pi|_{U_j})^{-1}(t)$ if and only if ${}^{(j)}\gamma\rho(z', z)|_{z=\tilde{\omega}(t)} = 0 \ \forall\, \gamma \in \mathbb{N}^{m_1-\kappa}$. Put $s_j(t, z') := ({}^{(j)}\gamma\rho(z', z)|_{z=\tilde{\omega}(t)})_{\gamma \in \mathbb{N}^{m_1-\kappa}}$ and use noetherianity. $\square$

Proof of Proposition 1.75. Starting with $\S^1_{\mathscr{M}} := \{(z, \bar{w}, z') : (z, \bar{w}) \in \mathscr{M}, r(z, \bar{w}, z') = 0\}$ and $\Gamma r(f) = \{(z, \bar{w}, f(z)) : (z, \bar{w}) \in \mathscr{M}\} \subset \S^1_{\mathscr{M}}$, we can again formalize the data as follows. We take coordinates on $\mathscr{M} \cong \Delta^\kappa$, $\kappa = 2m + d$. Let $\kappa \in \mathbb{N}_*$, $n \in \mathbb{N}_*$, $J \in \mathbb{N}_*$, $r : \Delta^\kappa \times \Delta^n \to \mathbb{C}^J$, $(t, z) \mapsto r(t, z)$ be a holomorphic power series mapping converging normally in $(2\Delta)^\kappa$, assume $r_j \in \mathscr{O}_\kappa(\Delta^\kappa) \times \mathscr{A}_n(\Delta^n)$, let

$$S = \{(t, z) \in \Delta^\kappa \times \Delta^n : r(t, z) = 0\}. \tag{3.17}$$

Assume that there exists $\lambda : \Delta^\kappa \times \Delta^n \to \Delta^n$ holomorphic, converging in $(2\Delta)^\kappa$ such that $\Gamma r(\lambda) \subset S$, let $\pi : \Delta^\kappa \times \Delta^n \to \Delta^n$ be the projection.

Let us inductively define a collection of S_α's, $\alpha \in \mathbb{N}_*$. First $S_1 = S$. Next, $S_\alpha = \{(t, z) \in \Delta^\kappa \times \Delta^n : r_\alpha(t, z) = 0\}$, $r_\alpha : \Delta^\kappa \times \Delta^n \to \mathbb{C}^{J_\alpha}$, $J_\alpha \in \mathbb{N}_*$, $J_\alpha \geq J_{\alpha-1}$, $r_{\alpha,j} = r_{\alpha-1,j} \ \forall\, 1 \leq j \leq J_{\alpha-1}$, $r_{\alpha,j} \in \mathscr{O}_\kappa(\Delta^\kappa) \times \mathscr{A}_n(\Delta^n)$ and $\Gamma r(\lambda) \subset S_\alpha$.

The construction of $S_{\alpha+1}$ consists in forming the Jacobian matrix of the $r_{\alpha,j}$'s with respect to z, $H_\alpha = (\frac{\partial r_{\alpha,j}}{\partial z_k})_{1 \leq k \leq n}^{1 \leq j \leq J_\alpha}$, in taking $(r_{\alpha+1,j})_j :=$ the collection of all the minors $\delta_{\alpha,j}(t, z)$, $1 \leq j \leq e_\alpha$, of maximal generic rank over $\Delta^\kappa \times \Delta^n$ of this matrix, where $e_\alpha =: J_{\alpha+1} - J_\alpha \in \mathbb{N}_*$ is the number of such minors. Then put $(r_{\alpha+1,j})_{1 \leq j \leq J_{\alpha+1}} := ((r_{\alpha,j})_{1 \leq j \leq J_\alpha}, (\delta_{\alpha,j-J_\alpha})_{J_\alpha+1 \leq j \leq J_{\alpha+1}}$ and put

$$S_{\alpha+1} := \{(t, z) \in \Delta^\kappa \times \Delta^n : r_{\alpha+1,j}(t, z) = 0, 1 \leq j \leq J_{\alpha+1}\}. \tag{3.18}$$

Of course, $r_{\alpha+1,j} \in \mathscr{O}_\kappa(\Delta^\kappa) \times \mathscr{A}_n(\Delta^n)$, $\forall\, j = J_\alpha + 1, \dots, J_{\alpha+1}$. Also if we were starting with $(z, \bar{w}) = t \in \mathscr{M}$, we would have got some $r_{\alpha+1,j}(z, \bar{w}, z')$ depending on the two variables $(z, \bar{w})$ even if we let $(z, \bar{w})$ vary only in $\mathscr{M}$, hence getting new equations like the $\tilde{r}_j$ of Proposition 1.75.

Then $S_{\alpha+1} \subsetneq S_\alpha$. Indeed by construction $J_{\alpha+1} > J_\alpha$ and the zero-locus of equations from a minor $\delta_{\alpha,j}$ of maximal generic rank coincides with S_α at each point (t_p, z_p) where $\delta_\alpha(t_p, z_p) \neq 0$ but $S_{\alpha+1}$ does not contain S_α in a neighborhood of such a point.

Thus there exists an integer $a \in \mathbb{N}_*$ such that $S_{a+1} = S_a$ and $S_{a+1} \supset \Gamma r(\lambda)$ or $S_a \supset \Gamma r(\lambda)$ and there exists a minor $\delta_{a,j}(t, z)$ such that $\Gamma r(\lambda) \not\subset \{\delta_{\alpha,j} = 0\}$. The case $S_{a+1} = S_a$ and $\Gamma r(\lambda) \subset S_{a+1}$ is impossible because then $\dim_{\mathbb{C}} S_{a+1} \geq \kappa \geq 1$ and therefore its minors are nontrivial which implies that $S_{a+1} \subsetneq S_a$ by the above remark.

Therefore $S_a \supset \Gamma r(\lambda)$ and $\Gamma r(\lambda) \not\subset \{\delta_{a,j} = 0\}$.

At each point of the Zariski open subset $\{\delta_{a,j} \neq 0\} \cap \Gamma r(\lambda)$ of $\Gamma r(\lambda)$, locally S_a is given by equations of the form $z_2 = \Phi(t, z_1)$, $(z_1, z_2) \in \mathbb{C}^{n_1} \times \mathbb{C}^{n_1}$, $n_1 + n_2 = n$, because of the constant rank theorem. This proves $(*)$ of Proposition 1.75 in this context. Notice that we make localization in a smaller open set, which is a neighborhood of some point $(\underline{t}, \lambda(\underline{t})) \in \Gamma r(\lambda) \cap \{\delta_{a,j} \neq 0\}$.

Next, we compute $G_F[t]$ in case $F(= S_a)$ is given by $\{(t, z) \in \Delta^\kappa \times \Delta^n : z_2 = \Phi(t, z_1)\}$ to get $(**)$. This is a particular case of Lemma 3.15: let $L = \frac{\partial}{\partial z_1} + \Phi_{z_1}(t, z_1)\frac{\partial}{\partial z_2}$ be in vectorial notation the basis of vector fields tangent to F. Then $\rho'(z', z_1, \Phi(t, z_1)) = 0\ \forall\, z_1$ if and only if $L^\gamma \rho'(z', 0, \Phi(t, 0)) = 0\ \forall\, \gamma \in \mathbb{N}^{n_1}$: these define analytic equations $s(t, z')$, which completes the proof of Proposition 1.75. Notice that we make localization before computing $G_F[t]$: this corresponds to taking $\mathbb{W}'_{w,\bar{z}_1} = \widetilde{\S}^1_{w,\bar{z}_1} \cap (U_p \times \overline{U}_p \times U'_{p'})$ and then $r^{U'_{p'}}_{M'}(\mathbb{W}'_{w,\bar{z}_1})$. $\square$

4. Examples

The general idea of all of these examples is to construct M, M', f with the reflection set $\S^1 = \{(z, \bar{w}, z') : r(z, \bar{w}, z') = 0\}$ containing two or more irreducible components and to exploit this fact in order to exhibit rather disharmonious phenomena.

Check of Example 1.53. Let $z \in Q_{\bar{w}}$,

$$z_5 = \bar{w}_5 + i z_1 \bar{w}_1. \tag{4.1}$$

Then $z' \in r_{M'}(f(Q_{\bar{z}}))$ if and only if

$$\rho'(z', (\bar{w}_1, 0, 0, 0, z_5 - i z_1 \bar{w}_1)) = 0 \quad \forall\, \bar{w}_1 \in \mathbb{C}, i.e. \tag{4.2}$$

$$z'_5 - [z_5 - i z_1 \bar{w}_1 + i \bar{w}_1^2 z'_3 z'_4 + i z'_1 \bar{w}_1] = 0 \quad \forall\, \bar{w}_1 \in \mathbb{C}.$$

From this follows $z'_5 = z_5$, $z'_1 = z_1$, $z'_3 z'_4 = 0$. Therefore

$$\S^1 = \{(z, \bar{w}, z') : z'_5 = z_5, z'_1 = z_1, z'_3 z'_4 = 0\} \tag{4.3}$$

(4.4)
$$\mathbb{V}'_z = \{(z_1, \zeta'_2, \zeta'_3, 0, z_5) : \zeta'_2, \zeta'_3 \in \mathbb{C}\} \cup \{(z_1, \zeta'_2, 0, \zeta'_4, z_5) : \zeta'_2, \zeta'_4 \in \mathbb{C}\}.$$

Now, it is clear that $\Gamma r(f)$ is contained in

(4.5) $$\S^1_{sing} = \{(z, \bar{w}, z') : z'_5 = z_5, z'_1 = z_1, z'_3 = 0, z'_4 = 0\} := \widetilde{\S}^1$$

(4.6) $$\widetilde{\S}^1_{z,\bar{w}} = \{(z_1, \zeta'_2, 0, 0, z_5) : \zeta'_2 \in \mathbb{C}\}.$$

To compute $r_{M'}(\widetilde{\S}^1_{w,\bar{z}_1})$, we write

(4.7) $$\rho'(w', \bar{w}_1, \bar{\zeta}'_2, 0, 0, \bar{w}_5) = 0 \quad \forall\, \bar{\zeta}'_2, i.e.$$

$$w'_5 - \bar{w}_5 - i[w'_1\bar{w}_1 + \bar{w}_1^2 w'_3 w'_4 + \bar{\zeta}'^2_2 w'^2_3] = 0 \quad \forall\, \bar{\zeta}'_2.$$

From this follows $w'_3 = 0$, $w'_5 = \bar{w}_5 + iw'_1\bar{w}_1$. Therefore

(4.8) $$r_{M'}(\widetilde{\S}^1_{w,\bar{z}_1}) = \{(w'_1, w'_2, 0, w'_4, \bar{w}_5 + iw'_1\bar{w}_1) : w'_1, w'_2, w'_4 \in \mathbb{C}\}$$

and

(4.9) $$\widetilde{\S}^1_{z,\bar{w}} \cap \widetilde{\S}^1_{w,\bar{z}_1} = \{(z_1, \zeta'_2, 0, 0, z_5) : \zeta'_2 \in \mathbb{C}\}.$$

In conclusion, $\dim_{f(z)} \mathbb{Z}'_{z,\bar{w}} = \forall\, z$. On the other hand,

(4.10)
$$\mathbb{V}'_w = \{(w_1, \zeta'_2, \zeta'_3, 0, w_5) : \zeta'_2, \zeta'_3 \in \mathbb{C}\} \cup \{(w_1, \zeta'_2, 0, \zeta'_4, w_5) : \zeta'_2, \zeta'_3 \in \mathbb{C}\}$$

and the equations of $r_{M'}(\mathbb{V}'_w)$ are given by

(4.11) $$\rho'(w', (\bar{w}_1, \bar{\zeta}'_2, \bar{\zeta}'_3, 0, \bar{w}'_5)) = 0 \quad \forall\, \bar{\zeta}'_2 \forall\, \bar{\zeta}'_3, i.e.$$

$$w'_5 - [\bar{w}_5 + i[w'_1\bar{w}_1 + \bar{w}_1^2 w'_3 w'_4 + w'_3\bar{\zeta}'^2_2 + w'^2_2\bar{\zeta}'^2_3 + w'^3_4\bar{\zeta}'^3_3]] = 0 \quad \forall\, \bar{\zeta}'_2 \forall\, \bar{\zeta}'_3$$

(4.12) $$\rho'(w', (\bar{w}_1, \bar{\zeta}'_2, 0, \bar{\zeta}'_4, \bar{w}_5)) = 0 \quad \forall\, \bar{\zeta}'_2 \forall\, \bar{\zeta}'_4, i.e.$$

$$w'_5 - [\bar{w}_5 + i[w'_1\bar{w}_1 + \bar{w}_1^2 w'_3 w'_4 + w'^2_3\bar{\zeta}'^2_2 + \bar{\zeta}'^3_4 w'^3_3]] = 0 \quad \forall\, \bar{\zeta}'_2 \forall\, \bar{\zeta}'_4.$$

From (4.11) we deduce $w'_3 = 0$, $w'_2 = 0$, $w'_4 = 0$, $w'_5 = \bar{w}_5 + iw'_1\bar{w}_1$. From (4.12) we deduce $w'_3 = 0$, $w'_5 = \bar{w}_5 + iw'_1\bar{w}_1$. Therefore

(4.13) $$r_{M'}(\mathbb{V}'_w) = \{(w'_1, 0, 0, 0, \bar{w}_5 + iw'_1\bar{w}_1) : w'_1 \in \mathbb{C}\} = f(Q_{\bar{w}})$$

and finally

(4.14) $$\mathbb{V}'_z \cap r_{M'}(\mathbb{V}'_w) = \{(z_1, 0, 0, 0, z_5)\} = \{f(z)\}.$$

In conclusion, $\dim_{f(z)} \mathbb{X}'_{z,\bar{w}} = 0$. This completes Example 1.53. □

Check of Example 1.56. Here, if $z_4 = \bar{w}_4 + i\bar{w}_1 z_1$,

(4.15) $$\S^1 = \{(z, \bar{w}, z') : z'_4 = z_4, z'_1 = z_1, z'_2 z'_3 = 0\}.$$

Now, it is clear that $\Gamma r(f)$ is contained in $\S^1_{sing}$

(4.16) $$\S^1_{sing} = \{(z, \bar{w}, z') : z'_4 = z_4, z'_1 = z_1, z'_2 = 0, z'_3 = 0\}.$$

Whence

$$\widetilde{\S}^1_{z,\bar w} = \{(z_1, 0, 0, 0, z_5)\} = \mathbb{W}'_{z,\bar w} \tag{4.17}$$

and finally

$$\dim_{f(z)} \mathbb{W}'_{z,\bar w} = \dim_{f(z)} \mathbb{Z}'_{z,\bar w} = 0 \quad \forall\, z. \tag{4.18}$$

On the other hand,

$$\S^1_{z,\bar w} = \{(z_1, \zeta'_2, 0, z_4) : \zeta'_2 \in \mathbb{C}\} \cup \{(z_1, 0, \zeta'_3, z_4) : \zeta'_2 \in \mathbb{C}\} = \mathbb{V}'_z \tag{4.19}$$

and the equations of $r_{M'}(\mathbb{V}'_w)$ are given by

$$\rho'(w', (\bar w_1, 0, \bar\zeta'_3, \bar w_4)) = w'_4 - [\bar w_4 + i[w'_1 \bar w_1 + \bar w_1^2 w'_2 w'_3]] = 0 \quad \forall\, \bar\zeta'_3 \tag{4.20}$$

$$\rho'(w', (\bar w_1, \bar\zeta'_2, 0, \bar w_4)) = w'_4 - [\bar w_4 + i[w'_1 \bar w_1 + \bar w_1^2 w'_2 w'_3]] = 0 \quad \forall\, \bar\zeta'_2. \tag{4.21}$$

It follows only the equation $w'_4 = \bar w_4 + i[w'_1 \bar w_1 + \bar w_1^2 w'_2 w'_3]$. Therefore

$$r_{M'}(\mathbb{V}'_w) = \{(w'_1, w'_2, w'_3, \bar w_4 + i[w'_1 \bar w_1 + \bar w_1^2 w'_2 w'_3]) : w'_1, w'_2, w'_3 \in \mathbb{C}\} \tag{4.22}$$

$$\mathbb{V}'_z \cap r_{M'}(\mathbb{V}'_w) = \{(z_1, w'_2, 0, z_4) : w'_2 \in \mathbb{C}\} \cup \{(z_1, 0, w'_3, z_4) : w'_3 \in \mathbb{C}\} = \mathbb{V}'_z, \tag{4.23}$$

whence $\dim_{f(z)} \mathbb{X}'_{z,\bar w} = 1 \;\forall\, z$. Example 1.56 is complete. □

Check of Example 1.66. Let us establish:

The function $\mathscr{M} \ni (z, \bar w) \mapsto \dim_{f(z)} \mathbb{X}'_{z,\bar w} \in \mathbb{N}$ is neither upper semi continuous nor lower semi continuous in general.

Proof. First, whenever $\dim_{f(0)} r_{M'}(f(Q_0)) = 0$, then $\dim_{f(z)} r_{M'}(f(Q_{\bar z})) = 0$ too for $z \in \mathscr{V}_{\mathbb{C}^n}(0)$ because of Lemma 2.3 and so there exists $V = \mathscr{V}_{\mathbb{C}^n}(0)$ such that $\dim_{f(z)} \mathbb{X}'_{z,\bar w} = 0 \;\forall\, z, w \in U$, $z \in Q_{\bar w}$. For instance, $M = M'$, $f = \mathrm{Id}$, $M = \{z_2 = \bar z_2 + i z_1 \bar z_1\}$.

Therefore $(z, \bar w) \mapsto \dim_{f(z)} \mathbb{X}'_{z,\bar w}$ could be continuous.

This is false. Indeed, let $M = M' = \{z_3 = \bar z_3 + i z_1 \bar z_1 (1 + z_2 \bar z_2)\} \subset \mathbb{C}^3$, $f = \mathrm{Id}$. First, M is Levi-nondegenerate at every point of $\mathbb{C}^3 \backslash \{z_1 = 0\}$, so $\dim_{f(p)} \mathbb{X}'_{p,\bar p} = 0$ at those points. Let $Q_0 = \{(z_1, z_2, 0) : z_1, z_2 \in \mathbb{C}\}$, $r_{M'}(Q_0) = \{(0, z_2, 0) : z_2 \in \mathbb{C}\} = \{q \in \mathbb{C}^3 : Q_{\bar q} = Q_0\}$, so $r_{M'}(Q_0) = Q_0 = \{(z_1, z_2, 0) : z_1, z_2 \in \mathbb{C}\}$, so $r_{M'}(Q_0) \cap r^2_{M'}(Q_0) = \{(0, z_2, 0) : z_2 \in \mathbb{C}\}$ has dimension 1.

Therefore $(z, \bar w) \mapsto \dim_{f(z)} \mathbb{X}'_{z,\bar w}$ can be at best upper semi-continuous.

This is false. Indeed, let $M = \{(z_1, z_4) \in \mathbb{C}^2 : z_4 = \bar z_4 + i z_1 \bar z_1\}$, let

$$M' = z'_4 = \bar z'_4 + i z'_1 \bar z'_1 + i z'_3 \bar z'_2 + i \bar z'_3 z'_2 + i z'^2_1 \bar z'_3 \bar z'_2 + i \bar z'^2_1 z'_3 z'_2 \tag{4.24}$$

and

$$f(z_1, z_4) = (z_1, z_4 \sin^3 z_1, 0, z_4), \qquad f(M) \subset M'. \tag{4.25}$$

Then $Q_0 = \{(z_1, 0)\}$, $f(Q_0) = \{(z_1, 0, 0, 0)\}$. We claim that

1. $r_{M'}(f(Q_0)) \cap r_{M'}(f(Q_0)) = \{(0, 0, 0, 0)\}$ and

2. $r_{M'}(f(Q_{\bar z}))\cap r^2_{M'}(f(Q_{\bar w}))=\{(z_1,z_2',0,z_4):z_2'\in\mathbb{C}\}\,\forall\, z,w,\, z\in Q_{\bar w}$, $z\neq 0$.
This will show that $(z,\bar w)\mapsto \dim_{f(z)}\mathbb{X}'_{z,\bar w}$ cannot be upper semicontinuous in general.

Indeed,

(4.26)
$$r_{M'}(f(Q_0))=\{(0,z_2,0,0)\}\cup\{(0,0,z_3,0)\}\ \text{and}\ r^2_{M'}(f(Q_0))=\{(z_1,0,0,0)\},$$
so 1 holds.

Let $(z_1,z_4)\neq(0,0)$, let $z\in Q_{\bar w}$, $w=(w_1,w_4)$, $z_4=\bar w_4+iz_1\bar w_1$. Then $f(Q_{\bar z})=\{(w_1,(\bar z_4+iw_1\bar z_1)\sin^3 w_1,0,\bar z_4+iw_1\bar z_1):w_1\in\mathbb{C}\}$. By definition, $r_{M'}(f(Q_{\bar z}))=\{z':\rho'(z',\bar f(\bar w))=0\,\forall\, w\in Q_{\bar z}\}$. Write

$$\rho'(z',\bar f(\bar w))=0\quad \forall\,\bar w_1,\ i.e. \tag{4.27}$$
$$z_4'-[z_4-i\bar w_1z_1+iz_1'\bar w_1+iz_3'(z_4-i\bar w_1z_1)\sin^3\bar w_1+iz_3'z_2'\bar w_1^2]=0\quad\forall\,\bar w_1.$$
We deduce equations $z_4'=z_4$, $z_1'=z_1$, $z_3'z_2'=0$, $z_3'z_4=0$, $z_3'z_1=0$. Therefore if $(z_1,z_4)\neq(0,0)$, then

$$r_{M'}(f(Q_{\bar z}))=\{(z_1,z_2',0,z_4):z_2'\in\mathbb{C}\}. \tag{4.28}$$

Next, $r^2_{M'}(f(Q_{\bar w}))$ is given by

(4.29)
$$\rho'(z',(\bar w_1,\bar\zeta_2',0,\bar w_4))=z_4'-[\bar w_4+iz_1'\bar w_1+iz_3'z_2'\bar w_1^2+iz_3'\bar\zeta_2']=0\quad\forall\,\bar\zeta_2'.$$
We deduce equations $z_3'=0$, $z_4'=\bar w_4+iz_1'\bar w_1$, so

(4.30)
$$r^2_{M'}(f(Q_{\bar w}))=\{(z_1',z_2',0,\bar w_4+iz_1'\bar w_1):z_1',z_2'\in\mathbb{C}\},\qquad (z_1,z_4)\neq(0,0).$$
Finally for such $(z_1,z_4)\neq(0,0)$,

$$r_{M'}(f(Q_{\bar z}))\cap r^2_{M'}(f(Q_{\bar w}))=\{(z_1,z_2',0,z_4):z_2'\in\mathbb{C}\}, \tag{4.31}$$
which shows that 2 above holds. This completes Example 1.66. □

Example 1.66 already shows that $\mathbb{X}'_{z,\bar w}$ is not analytically parametrized by $(z,\bar w)$. Example 1.68 also provides a supplementary reason.

Check of Example 1.68. First, let us take in (3.4): $\kappa=2$, $n=3$, $\lambda(t_1,t_2)=(t_1,t_2,0)$,

(4.32)
$$F=\{(t,z)\in\Delta^2\times\Delta^3:(t_1z_3-t_2^2)(z_1-t_1)=0,(t_1z_3-t_2^2)(z_2-t_2)=0,$$
$$(t_1z_3-t_2^2)z_3=0\}=F_1\cup F_2=\Gamma r(\lambda)\cup\{t_1z_3-t_2^2=0\}.$$
Then the fibers $F_2[t]=\emptyset$ if $|t_2^2|\geq|t_1|$, say if $t\in T_c:=\Delta^2\cap\{|t_2^2|\geq|t_1|\}$, and $F_2[t]=\{(z_1,z_2,z_3)\in\Delta^3:z_3=t_2^2/t_1\}$ if $t\in T_0:=\Delta^2\backslash T_c$. Clearly

$$G_F[t]=\{z'\in\Delta^{n'}:\rho(z',(t_1,t_2,0))=0\}\quad\forall\, t\in\Delta^2 \tag{4.33}$$
and

$$G_{F_2}[t]=\{z'\in\Delta^{n'}\} \tag{4.34}$$
if $t\in T_c$ and

$$G_{F_2}[t]=\{z'\in\Delta^{n'}:(\partial_{z_1}^{k_1}\partial_{z_2}^{k_2}\rho)(z',0,0,t_2^2/t_1)=0\,\forall\, k_1\forall\, k_2\in\mathbb{N}\} \tag{4.35}$$

if $t \in T_0$. The border equals $\overline{T}_0 \cap T_c = \{t \in \Delta^2 : |t_1| = |t_2^2|\}$. It is real analytic, not complex.

Next, we build a mapping on the basis of this example. Let $n = 3$, $n' = 4$, $M : z_4 = \bar{z}_4 + iz_1\bar{z}_1 + iz_2\bar{z}_2$,

(4.36) $$M' : \ z'_4 = \bar{z}'_4 + i[z'^2_1\bar{z}'_3(\bar{z}'^2_2 - \bar{z}'_1\bar{z}'_3) + \bar{z}'^2_1 z'_3(z'^2_2 - z'_1 z'_3) + z'_1\bar{z}'_1 + z'_2\bar{z}'_2],$$

$f(z_1, z_2, z_4) = (z_1, z_2, 0, z_4)$. Then one can check that the equations of $\S'_{z,\bar{w}} = \mathbb{V}'_z$ are: $z'_4 = z_4$, $z'_1 = z_1$, $z'_2 = z_2$, $z'_3(z_2^2 - z_1 z_3) = 0$, from which Example 1.68 follows. □

Check of Example 1.72. Consider $f : \mathbb{C}^2 \ni (z_1, z_4) \mapsto (z_1, 0, 0, z_4) \in \mathbb{C}^4$, $M : z_4 = \bar{z}_4 + iz_1\bar{z}_1$ and

(4.37)
$$M' : \ z'_4 = \bar{z}'_4 + iz'_1\bar{z}'_1 + iz'^2_1(1 + \bar{z}'_3)\bar{z}'_3 + i\bar{z}'^2_1(1 + z'_3)z'_3 + iz'_2 z'_3\bar{z}'^2_2 + i\bar{z}'_2\bar{z}'_3 z'^2_2.$$

Identify M with $f(M) = \{(z_1, 0, 0, z_4) : (z_1, z_4) \in M\}$. Take $U = \Delta^2 \cong \Delta \times 0 \times 0 \times \Delta$, $U' = \Delta^4$. We will first check 1 and 2 for $z = \bar{w} = 0 \in \mathbb{C}^2$.

First, compute $r_{M'}(Q_0)$ by writing $\rho'(z', \bar{f}(\bar{z}_1, 0)) = z'_4 - [i\bar{z}_1 z'_1 + i\bar{z}_1^2(1 + z'_3)z'_3]$ so that equations of $r_{M'}(Q_0)$ are $z'_4 = 0$, $z'_1 = 0$, $(1 + z'_3)z'_3 = 0$, whence

(4.38) $$r^{U'}_{M'}(Q_0) = \{(0, z'_2, 0, 0) : z'_2 \in \Delta\}$$

(4.39)
$$r^{\mathbb{C}^{n'}}_{M'}(Q_0) = \{(0, z'_2, 0, 0) : z'_2 \in \mathbb{C}\} \cup \{(0, z'_2, 1, 0) : z'_2 \in \mathbb{C}\} := \mathbb{A}^1_0 \cup \mathbb{A}^2_0.$$

To compute $(r^{U'}_{M'})^2(Q_0)$, write $\rho'(z', (0, \bar{w}'_2, 0, 0)) = z'_4 - i[\bar{w}'^2_2 z'_2 z'_3]$ so that equations of $(r^{U'}_{M'})^2(Q_0)$ are $z'_4 = 0$, $z'_2 z'_3 = 0$, whence

(4.40)
$$(r^{U'}_{M'})^2(Q_0) = \{(z'_1, z'_2, 0, 0) : z'_1, z'_2 \in \Delta\} \cup \{(z'_1, 0, z'_3, 0) : z'_1, z'_3 \in \Delta\}$$

(4.41) $$(r^{U'}_{M'})(Q_0) \cap (r^{U'}_{M'})^2(Q_0) = \{(0, z'_2, 0, 0) : z'_2 \in \Delta\}.$$

On the other hand, $(r^{\mathbb{C}^{n'}}_{M'})^2(Q_0) = r^{\mathbb{C}^{n'}}_{M'}(\mathbb{A}^1_0) \cap r^{\mathbb{C}^{n'}}_{M'}(\mathbb{A}^2_0)$, where as above

(4.42)
$$r^{\mathbb{C}^{n'}}_{M'}(\mathbb{A}^1_0) = \{(z'_1, z'_2, 0, 0) : z'_1, z'_2 \in \mathbb{C}\} \cup \{(z'_1, 0, z'_3, 0) : z'_1, z'_3 \in \mathbb{C}\}.$$

To compute $r^{\mathbb{C}^{n'}}_{M'}(\mathbb{A}^2_0)$, write $\rho'(z', (0, \bar{w}'_2, 1, 0)) = z'_4 - i[\bar{w}'^2_2 z'_2 z'_3 + \bar{w}'_2 z'^2_2] = 0 \ \forall \bar{w}'_2$ so that its equations are $z'_4 = 0$, $z'^2_2 = 0$, $z'_2 z'_3 = 0$, whence $r^{\mathbb{C}^{n'}}_{M'}(\mathbb{A}^2_0) = \{(z'_1, 0, z'_3, 0) : z'_1 \in \mathbb{C}, z'_2 \in \mathbb{C}\}$ and

(4.43) $$r^{\mathbb{C}^{n'}}_{M'}(Q_0) \cap (r^{\mathbb{C}^{n'}}_{M'})^2(Q_0) = \{(0, 0, 0, 0)\} \cup \{(0, 0, 1, 0)\}.$$

In conclusion, for $z = \bar{w} = 0 \in M$, $r^{\mathbb{C}^{n'}}_{M'}(Q_0) \cap (r^{\mathbb{C}^{n'}}_{M'})^2(Q_0)$ is finite whereas $\dim_0[r^{U'}_{M'}(Q_0) \cap (r^{U'}_{M'})^2(Q_0)] = 1$. Now, let $z \in Q_{\bar{w}}$, $z, w \in \Delta \times 0 \times 0 \times \Delta$, $(z_1, 0, 0, z_4) \in r^{U'}_{M'}(Q_{\bar{z}_1, 0, 0, \bar{z}_4}) \cap (r^{U'}_{M'})^2(Q_{\bar{w}_1, 0, 0, \bar{w}_4})$. As above,

(4.44) $$r^{U'}_{M'}(Q_{\bar{z}}) = \{(z_1, z'_2, 0, z_4) : z'_2 \in \Delta\}$$

(4.45)
$$r_{M'}^{\mathbb{C}^{n'}}(Q_{\bar z}) = \{(z_1, z_2', 0, z_4) : z_2' \in \mathbb{C}\} \cup \{(z_1, z_2', 1, z_4) : z_2' \in \mathbb{C}\} := \mathbb{A}_z^1 \cup \mathbb{A}_z^2.$$
To compute $(r_{M'}^{U'})^2(Q_{\bar w}) = \{w' \in \Delta^4 : \rho'(w', \bar z') = 0 \ \forall\, z' \in r_{M'}^{U'}(Q_{\bar w}\})$, write first
(4.46)
$$\rho'(w', (\bar w_1, \bar z_2', 0, \bar w_4)) = w_4' - [w_4 + iw_1'\bar w_1 + i\bar w_1^2(1 + w_3')w_3' + iw_2'w_3'\bar z_2'^2]$$
whence
(4.47)
$$(r_{M'}^{U'})^2(Q_{\bar w}) = \{(w_1', w_2', 0, \bar w_4 + iw_1'\bar w_1) : w_1', w_2' \in \Delta, |\bar w_4 + iw_1'\bar w_1| < 1\} \cup$$
$$\cup \{(w_1', 0, w_3', \bar w_4 + iw_1'\bar w_1) : w_1', w_2' \in \Delta, |\bar w_4 + iw_1'\bar w_1| < 1\}.$$

(4.48) $$r_{M'}^{U'}(Q_{\bar z}) \cap (r_{M'}^{U'})^2(Q_{\bar w}) = \{(z_1, w_2', 0, z_4) : w_2' \in \Delta\}.$$

On the other hand analogously

(4.49) $$r_{M'}^{\mathbb{C}^{n'}}(\mathbb{A}_w^1) = \{(z_1, w_2', 0, z_4) : w_2' \in \mathbb{C}\}.$$

To compute $r_{M'}^{\mathbb{C}^{n'}}(\mathbb{A}_w^2) = \{w' \in \mathbb{C}^4 : \rho'(w', \bar z') = 0 \ \forall\, z' \in \mathbb{A}_w^2\}$, write

(4.50) $$\rho'(w', (w_1, z_2', 1, w_4)) =$$
$$= w_4' - [w_4 + iw_1'\bar w_1 + i\bar w_1^2(1 + w_3')w_3' + iw_2'w_3'\bar z_2'^2 + iw_2'^2\bar z_2']$$
whence

(4.51) $$r_{M'}^{\mathbb{C}^{n'}}(\mathbb{A}_w^2) = \{(w_1', 0, w_3', \bar w_4 + iw_1'\bar w_1) : w_1', w_2' \in \mathbb{C}\}$$

(4.52)
$$r_{M'}^{\mathbb{C}^{n'}}(Q_{\bar z}) \cap (r_{M'}^{\mathbb{C}^{n'}})^2(\mathbb{A}_w^1) \cap (r_{M'}^{\mathbb{C}^{n'}})^2(\mathbb{A}_w^2) = \{(z_1, 0, 0, z_4)\} \cup \{(z_1, 0, 1, z_4\}.$$
This completes Example 1.72. □

REFERENCES

[1] M.S. BAOUENDI and L.P. ROTHSCHILD, *Mappings of real algebraic hypersurfaces*, Journal of the American Mathematical Society, **8** (1995), 997–1015.

[2] M.S. BAOUENDI, P. EBENFELT and L.P. ROTHSCHILD, *Algebraicity of holomorphic mappings between real algebraic sets in $\mathbb{C}^n$*, *Acta Mathematica*, **177** (1996), 225–273.

[3] M.S. BAOUENDI, P. EBENFELT and L.P. ROTHSCHILD, *Parametrization of local biholomorphisms of real analytic hypersurfaces*, Asian Journal of Mathematics **1** (1997), 1-16.

[4] M.S. BAOUENDI, P. EBENFELT and L.P. ROTHSCHILD, *Real hypersurfaces in complex space and their mappings*, Princeton Mathematical Series **47**, Princeton 1999.

[5] E. CHIRKA, *Complex Analytic Sets*. Kluwer Academic Publishers, Dordrecht, 1989.

[6] B. COUPET, F. MEYLAN and A. SUKHOV, *Holomorphic maps of algebraic CR manifolds*, International Mathematics Research Notices, 1999, no 1, 1-29.

[7] B. COUPET, S. PINCHUK and A. SUKHOV, *On partial analyticity of CR mappings*, Preprint, Université de Provence, **28**, December 1998. Math. Z. (*to appear*).

[8] S. DAMOUR, *Algébricité d'applications holomorphes entre sous-variétés CR réelles algébriques de* $\mathbb{C}^n$. Prépublication, Université de Provence, **26**, Juillet 1999. À paraître dans C. R. Acad. Sci Paris.

[9] X. HUANG, *On the mapping problem for algebraic real hypersurfaces in the complex euclidean spaces of different dimensions*, Annales Institut Fourier Grenoble, **44** (1994), 433–463.

[10] J. MERKER, *On the partial algebraicity of holomorphic mappings between real algebraic sets*. Preprint, Université de Provence **7**, February 1999. `arXiv.org/math/abs/9906057.`

[11] J. MERKER, *Vector field construction of Segre sets*, Preprint, Université de Provence, **28**, December 1998. `arXiv.org/math/abs/9901010.`

[12] J. MERKER, *Sur la réduction des variétés de segre*, En préparation.

[13] R. SHARIPOV and A. SUKHOV, *On CR mappings between algebraic Cauchy-Riemann manifolds and separate algebraicity for holomorphic functions*, Transactions of the Mathematical Society **348** (1996), 767–780.

[14] D. ZAITSEV, *Algebraicity of local holomorphisms between real algebraic submanifolds of complex spaces*. Acta Mathematica **183** (1999), 273–305.